US Army Corps of Engineers ®

Savannah District

Fort Bragg
North Carolina

Task Order Request Number
W912HN-09-X-5618
General Purpose Warehouse
RFP Letter, Bid Schedule, Wage Decision, Proposal Requirements and Technical Provisions
Division 01 and Appendices A through ZZ
FY 12, PN80087
July 2012

U.S. ARMY ENGINEERING DISTRICT, SAVANNAH
CORPS OF ENGINEERS
100 WEST OGLETHORPE AVENUE
SAVANNAH, GEORGIA 31401-3640

SECTION 01 10 00.W912HN-09-X-5618
TASK ORDER STATEMENT OF WORK

1.0 PROJECT OBJECTIVES

1.1. SECTION ORGANIZATION

2.0 SCOPE

2.1. General Purpose Warehouse

2.2. SITE

2.3. GOVERNMENT-FURNISHED GOVERNMENT INSTALL EQUIPMENT (GFGI)

2.4. FURNITURE REQUIREMENTS

3.0 General Purpose Warehouse

3.1. GENERAL REQUIREMENTS

3.2. FUNCTIONAL AND AREA REQUIREMENTS

4.0 APPLICABLE CRITERIA

4.1. INDUSTRY CRITERIA

4.2. MILITARY CRITERIA

5.0 GENERAL TECHNICAL REQUIREMENTS

5.1. SITE PLANNING AND DESIGN

5.2. SITE ENGINEERING

5.3. COMMISSIONING

5.4. ARCHITECTURE AND INTERIOR DESIGN

5.5. STRUCTURAL DESIGN

5.6. THERMAL PERFORMANCE

5.7. PLUMBING AND WATER CONSUMING EQUIPMENT

5.8. ELECTRICAL AND TELECOMMUNICATIONS SYSTEMS

5.9. HEATING, VENTILATING AND AIR CONDITIONING

5.10. ENERGY CONSERVATION

5.11. FIRE PROTECTION

5.12. SUSTAINABLE DESIGN

5.13. SECURITY (ANTI-TERRORISM STANDARDS)

6.0 PROJECT SPECIFIC REQUIREMENTS

6.1. GENERAL

6.2. APPROVED DEVIATIONS

6.3. SITE PLANNING AND DESIGN

6.4. SITE ENGINEERING

6.5. ARCHITECTURE

6.6. STRUCTURAL DESIGN

6.7. THERMAL PERFORMANCE

6.8. PLUMBING

6.9. SITE ELECTRICAL AND TELECOMMUNICATIONS SYSTEMS

6.10. FACILITY ELECTRICAL AND TELECOMMUNICATIONS SYSTEMS

6.11. HEATING, VENTILATING AND AIR CONDITIONING

6.12. ENERGY CONSERVATION

6.13. FIRE PROTECTION

6.14. SUSTAINABLE DESIGN

6.15. ENVIRONMENTAL

6.16. PERMITS

6.17. DEMOLITION

6.18. ADDITIONAL FACILITIES

1.0 PROJECT OBJECTIVES

1.0.1 The project objective is to design and construct facilities for the military that are consistent with the design and construction practices used for civilian sector projects that perform similar functions to the military projects. For example, a Company Operations Facility has the similar function as an office/warehouse in the civilian sector; therefore the design and construction practices for a company operations facility should be consistent with the design and construction of an office/warehouse building.

Comparison of Military Facilities to Civilian Facilities

Military Facility	Civilian Facility
General Purpose Warehouse	Warehouse

1.0.2 It is the Army's objective that these buildings will have a 50 year useful life. The design and construction should provide an appropriate level of quality to ensure the continued use of the facility over that time period with the application of reasonable preventive maintenance and repairs that would be industry-acceptable to a major civilian sector project OWNER. The facility design should consider that the Army may repurpose the use of the facility over the 50 year life. The Army's intent is to install products and materials of good quality that meet industry standard average life that corresponds with the period of performance expected before a major renovation or repurpose. The design should be flexible and adaptable to possible future uses different than the current to the extent practical while still meeting the operational and functional requirements defined within. Flexibility is achieved through design of more flexible structural load-bearing wall and column system arrangements. The site infrastructure will have at least a 50-year life expectancy with industry-accepted maintenance and repair cycles. Develop the project site for efficiency and to convey a sense of unity or connectivity with the adjacent buildings and with the Installation as a whole.

1.0.3 Requirements stated in this contract are minimums. Innovative, creative, and life cycle cost effective solutions, which meet or exceed these requirements are encouraged. Further, the OFFEROR is encouraged to seek solutions that will expedite construction (panelization, pre-engineered, etc.) and shorten the schedule. **The intent of the Government is to emphasize the placement of funds into functional/operational requirements. Materials and methods should reflect this by choosing the most economical Type of Construction allowed by code for this occupancy/project allowing the funding to be reflected in the quality of interior/exterior finishes and systems selected.**

1.1. SECTION ORGANIZATION

This Section is organized under 6 major “paragraphs”.

(1) Paragraph 1 is intended to define the project objectives and to provide a comparison between the military facility(ies) and comparable “civilian” type buildings.

(2) Paragraph 2 describes the scope of the project.

(3) Paragraph 3 provides the functional, operational and facility specific design criteria for the specific facility type(s) included in this contract or task order.

(4) Paragraph 4 lists applicable industry and government design criteria, generally applicable to all facility types, unless otherwise indicated in the Section. It is not intended to be all-inclusive. Other industry and government standards may also be used, where necessary to produce professional designs, unless they conflict with those listed.

(5) Paragraph 5 contains Army Standard Design Criteria, generally applicable to all facility types, unless otherwise indicated in the Section.

(6) Paragraph 6 contains installation and project specific criteria supplementing the other 5 paragraphs.

2.0 SCOPE

Design and Construct a General Purpose Warehouse (GPW) facility, and associated site work. The warehouse is intended to be similar, both functionally and technically to similar warehouse storage facilities in the private sector surrounding the community. The Site work is composed of parking, access drives, site utilities, site drainage, landscaping, and fencing.

2.0.1 OPTIONS

Option 1 is to provide additional rack capacity up to 33,354 SF. Option 2 is to provide additional number of parking spaces from 73 to 120.

2.1 GENERAL PURPOSE WAREHOUSE

Provide one standard, high bay, controlled temperature GPW. This warehouse is to accommodate logistic and administrative operations and to store combustible and non-combustible supplies. Assume 50 percent of personnel are female, unless otherwise indicated.

The maximum gross area for this GPW is 49,894 square feet

Minimum interior clear height is 28’-0” in warehouse area.

2.2. SITE:

Provide all site improvements necessary to support the new building facilities. Refer to Paragraph 6.

Approximate area available 5.00 acres

2.3. GOVERNMENT-FURNISHED GOVERNMENT-INSTALLED EQUIPMENT (GFGI)

Coordinate with Government on GFGI item requirements and provide suitable structural support, brackets for projectors/VCRs/TVs, all utility connections and space with required clearances for all GFGI items. Fire extinguishers are GF/GI personal property, while fire extinguisher brackets and cabinets are Contractor furnished and installed CF/CI. All Computers and related hardware, copiers, faxes, printers, video projectors, VCRs and TVs are GFGI.

The following are also GFGI items: [Not Supplied - FacilityAddREq : GFGI_ITEMS]

2.4. FURNITURE REQUIREMENTS

Provide furniture design for all spaces listed in Chapter 3 and including any existing furniture and equipment to be re-used. Coordinate with the user to define requirements for furniture systems, movable furniture, storage systems, equipment, any existing items to be reused, etc. Early coordination of furniture design is required for a complete and usable facility.

The procurement and installation of furniture is NOT included in this contract. Furniture will be provided and installed under a separate furniture vendor/installer contract. The general contractor shall accommodate that effort with allowance for entry of the furniture vendor/installer onto this project site at the appropriate time to permit completion of the furniture installation for a complete and usable facility to coincide with the Beneficial Occupancy Date (BOD) of this project. The furniture vendor/installer contract will include all electrical pre-wiring and the whips for final connection to the building electrical systems however; the general contractor shall make the final connections to the building electrical systems under this contract. Furthermore, the general contractor shall provide all Information/Technology (IT) wiring (i.e. LAN, phone, etc.) up to and including the face plate of all freestanding and/or systems furniture desk tops as applicable, the services to install the cable and face plates in the furniture, the coordination with the furniture vendor/installer to accomplish the installation at the appropriate time, and all the final IT connections to the building systems under this contract.

The Government reserves the right to change the method for procurement of and installation of furniture to Contractor Furnished/Contractor Installed (CF/CI). CF/CI furniture will require competitive open market procurement by the Contractor using the Furniture, Fixtures and Equipment (FF&E) package. Reference applicable appendix for Preliminary FF&E Information including furniture dimensions sizes as shown in the Standard Design.

2.5. NOT USED

3.0 FUNCTIONAL / OPERATIONAL REQUIREMENTS

3.1 General

The General Purpose Warehouse houses Fort Bragg's Food Service Troop Issue Subsistence Activity and its storage, and shipping/receiving operations.

3.2 Functional and Area Requirements

In addition to the criteria set forth in this RFP; UFC 4-442-01N "Design: Covered Storage" can be used as a guide for the building design and functionality.

Gross building area shall be computed according to subparagraphs below.

(a) Enclosed Spaces. The gross area includes the total area of all floors, including basements, mezzanines, penthouses, usable attic or sloping spaces used to accommodate mechanical equipment or for storage with an average height of 6'-11" measured from the underside of the structural system and with the perimeter walls measuring a minimum of 4'-11" in height, and other enclosed spaces as determined by the effective outside dimensions of the building.

(b) One-Half Spaces. One half of the area will be included in the gross area for balconies and porches; exterior covered loading platforms or facilities, either depressed, ground level, or raised; covered but not enclosed passageways or walks; covered and uncovered but open stairs; and covered ramps.

(c) Excluded Spaces. Crawl spaces; exterior uncovered loading platforms or facilities, either depressed, ground level, or raised; exterior insulation applied to existing buildings; open courtyards; open paved terraces; roof overhangs and soffits for weather protection; uncovered ramps; uncovered stoops; and utility tunnels and raceways will be excluded from the gross area.

Maximum gross area limits indicated cannot be exceeded.

3.2.1 Accessibility Requirements

GPW facilities shall comply with the Americans with Disabilities Act Accessibility Guidelines (ADAAG) and Architectural Barriers Act Accessibility Guidelines (ABAAG) for Buildings and Facilities.

3.2.1.1 Site Plan Design and Construction:

(a) Provide accessible compliant access from the parking lot to the building.

(b) Provide required number of accessible compliant vehicle parking stalls for each GPW building for visitor parking.

(c) Provide handicapped vehicle parking signage and pavement markings.

3.2.1.2 Facility Design and Construction:

(a) Facility Façade - Warehouse needs to be architecturally compatible with other buildings in complex

and with adjacent buildings.

(b) Provide at least one emergency egress, designed per accessibility codes. Egress shall be handicapped accessible. Electronic exterior door push buttons are not required.

(c) Provide accessibility clearances for corridors and door accesses in the logistics and administrative areas.

(d) Provide handicapped accessible public toilet(s).

(e) Provide handicapped accessible drinking fountains.

(f) Include provisions outlined within the ADA requirements for the vision or hearing impaired.

(g) Construction Materials - The building must be constructed with non-combustible materials and building elements, including walls, columns and floors.

(h) Truck Dock Areas:

(1) Docks shall be 48” (nominal) above hardstand and have 12’ w X 14’ h vertical lift doors. Provide full access curtain style dock seals, bumpers and bollards. The basis of design for dock seals is Nordock Model FL, with Weartough fabric, consisting of two side pads with compression recovery foam core, and one head curtain with min. 30 inch drop.

(2) Provide metal eyebrow canopies to protect forklift drivers from the elements during inclement weather. Canopy to extend out above each grouping of vertical roll up / pedestrian doors, and single doors provided for forklift access, at a height not to interfere with truck/trailer activity. All doors shall have nylon brush-style weather-stripping to prevent the entry of insects and to protect against external weather conditions.

(3) Dock Levelers/Truck Locks: Provide low-maintenance, ergonomically-friendly, full-pit combination dock levelers and truck locks with indoor and outdoor indicator lights at each of the truck dock doors. Dock height above the hardstand shall be 48”. Truck/trailer heights may vary from 36” above the hardstand up to 60” above the hardstand. Provide dock levelers to accommodate this range using lifts which are electrically operated. Dock levelers need to be of sufficient width for safe and efficient fork lift operation and have features intended to prevent lifts from driving off the dock when a trailer is not present. When at rest and in the level position, the levelers shall be supported by steel posts rather than totally dependent on hydraulics. Levelers shall have a rated capacity of 30,000 pounds or more.

(4) Dock Wells: Each dock well shall be designed to service a 53-foot long trailer plus tractor. Floors shall be reinforced concrete with a concrete sealed surface and level. Floor loading shall be adequate for maximum allowable truck/trailer loads. Dependable drainage shall be provided.

(5) Dock/Truck Guards - To avoid damage to the door jambs from trucking operations, suitable protective posts (bollards) or concrete truck wheel guards shall be provided at all truck entrances.

(6) Dock Bumpers - Rubber bumpers (size 12”d x 24”w x 12”h), are to be installed on both sides of each truck bay per manufacturer’s specifications.

(i) Weather Seals On Doors - The Contractor shall provide nylon brush-style weather stripping on all perimeter doors of the facility, including the vertical lift truck dock doors, for heating energy conservation and for pest management control.

(j) Mechanical, Electrical, and Telecommunications Rooms: Rooms shall accommodate space for equipment maintenance/repair access without having to remove other equipment. Electrical and telecommunications rooms shall be keyed separately for access by Installation maintenance personnel. Filter changes and preventative maintenance shall be performed without requiring access to the facility. All telecommunications rooms shall be conditioned space. Telecommunications room will be provided in accordance with the latest Installation Information Infrastructure Architecture (I3A) guidance. Telecommunications room provides a demarcation point between the outside plant cable and the building telecommunications cabling. Refer to paragraphs 3.7 ELECTRICAL AND TELECOMMUNICATIONS REQUIREMENTS for additional information.

3.2.2 Functional Requirements: General Purpose Warehouse (GPW) Function

(a) Flooring – In warehouse bays, all floors shall be sealed and hardened during the curing process with non-slip colored concrete sealer with a static coefficient of 0.6 or better (user preference).

(b) Roof Support Column Spacing – Provide clear span, column-free structural bays to allow for maximization space for industrial shelving for palletized loading. Shelving to be constructed back to back double row configuration with no interspersed single rows. Forklift access aisle width to be 10’ clear.

(c) Floor Coverings – Carpet tiles will be used throughout the non-warehouse areas, unless otherwise noted.

(d) Ceilings – Lay-in 24” x 24” acoustic ceilings will be used throughout the non-warehouse areas at 9’-0” AFF unless otherwise noted. Ceilings shall have a minimum Noise Reduction Coefficient (NRC) of .60 throughout occupied spaces.

(e) Intrusion Detection – The building will be protected by an intrusion detection system (IDS) wired into the installation’s central monitoring system. This warehouse is a controlled access area. All personnel and vertical lift door controls shall be provided with proximity card readers for controlled access.

(f) Penetrations in the walls must not reduce the specified fire resistance ratings. The fire resistance ratings of structural elements and construction assemblies must be in accordance with American Society of Testing and Materials (ASTM) E 119-98, Standard Test Methods for Fire Tests of Building Construction and Materials.

(g) If fire barrier walls are erected with expansion joints, the joints must be protected to their full height.

3.2.2.1 Functional Space Requirements: General Purpose Warehouse Area

(a) Forklift Recharge Area: Provide an area for recharging (1) battery-operated forklift with a lift capacity of 4500 lbs. Conventional rider electrical forklifts will be used. See Mechanical and Electrical requirements.

(b) Personnel Doors at Loading Docks: Provide a minimum of one (1) 3’-0” x 7’-0” personnel door at each dock vertical lift door. Provide exterior weather canopy above each door extending 3 feet out from face of building and 1’-0” extensions either side of door opening at 14’-0” AFF.

(c) Tall Roll-Up Doors: Provide one (1) 12’-0” wide x 14’-0” high vertical lift door (near loading dock area) on finish floor for forklift access to grade via minor ramp. Provide exterior weather canopy above each door extending 5 feet out from face of building and two feet extensions either side of door opening at 16’-0” AFF. Provide one (1) 12’-0” wide x 14’-0” high vertical lift doors on finish floor for forklift access to a projected exterior elevated loading dock (without ramp) at rear of building opposite end from ramped access.

(d) Loading Area: Provide one (1) truck loading area. Room length must be a minimum of 88 feet. Room width must be a minimum of 12 feet. A minimum of 974 net square feet is required.

(1) Function: Provide space for shipping and receiving operations.

(2) Adjacency requirements: Directly adjacent to warehouse storage area.

(3) Occupancy: Not occupied.

(4) Furnishings/Fixtures: Provide four (4) large truck dock vertical lift doors with exterior metal eyebrow canopy continuous for length of truck dock; one each dock leveler per truck door with forklift truck guard safety barrier feature, and one floor-mounted 6-inch diameter Schedule 40 pipe bollard each side of interior truck door. Provide four (4) tractor trailer dock-lock safety devices at grade, one at each truck door on grade compliant with North Carolina Department of Labor Occupational Safety and Health STD 1-11.7 (Securing Trucks or Trailers to Locking Docks). Provide an OSHA-compliant safety barrier gate when door is open, and rubber dock bumpers (size 12” d x 24” w x 12” h), installed both sides each truck bay per manufacturer’s instructions. The basis of design for the safety barrier gates is Nordock “Fall-Stop” ASG Model powered barrier gate.

(e) Warehouse Personnel Office: Provide one (1) Warehouse Personnel Office. Room length must be a minimum of 36 feet. Room width must be a minimum of 11 feet. A minimum of 400 net square feet is required.

(1) Function: Provide space for office overseeing shipping and receiving operations.

(2) Adjacency requirements: Directly adjacent to Loading Dock Area.

(3) Occupancy: Two.

(4) Furnishings/Fixtures: GFGI L-shaped steel/laminate desk unit with overhead storage cabinet, task light, tack board, keyboard tray, full modesty panel and storage pedestals (one box/box/file,

with pencil tray and file, one file/file), one four-drawer lateral file, two upholstered, metal frame guest chairs and one ergonomic task chair.

(e) General Purpose Warehouse Area: Provide area for General Purpose Warehouse area within classified access area. Room length must be a minimum of 300 feet. Room width must be a minimum of 95 feet. A minimum of 32,300 net square feet is required.

(1) Function: Provide space for high-bay bulk pallet rack storage of classified material.

(2) Adjacency requirements: Directly adjacent to loading area.

(3) Occupancy: Not occupied.

(4) Furnishings/Fixtures: Furnishings and fixtures in General Purpose Warehouse GFGI. Government to provide cut sheets and proposed layout of GFGI equipment in room.

(f) Refrigerated Storage: Provide one for Refrigerated Storage area within GP Warehouse area with air curtains, strip curtains, and thermal vestibule. Room length must be a minimum of 30 feet. Room width must be a minimum of 18 feet. Room height must be 14 feet clear inside. A minimum of 640 net square feet is required. Provide continuous min. 10’-0” clear width inside thermal vestibule to provide forklift access in temperature and humidity controlled conditions at refrigerator/freezers. Provide 10’-0” high x 10’-0” wide high-speed (100-in/sec) vertical roll-up doors for forklift access (Rytec Turbo-Seal Freezer door used as basis of design, GSA Contract GS-07F-0052K) for each refrigerator/freezer unit and at each end of thermal vestibule. Provide min. 6” diameter pipe bollard extending to height of door opening with a 6” diameter pipe cross-guard at top of opening to protect hood assembly air curtain blower, drive system, and lighting devices.

(1) Function: Provide space for bulk pallet storage of fresh foods requiring a minimum 33°F (1°C) temperature for refrigerated storage.

(2) Adjacency requirements: Adjacent to loading area.

(3) Occupancy: Not occupied.

(4) Furnishings/Fixtures: Furnishings and fixtures in General Purpose Warehouse GFGI. Government to provide cut sheets and proposed layout of GFGI equipment in room.

(5) Floor, wall, and ceiling construction must comply with U.S. Army Technical Bulletin Medical 530 (TB MED 530), Chapter 6.

(g) Freezer Storage: Provide three Freezer Storage areas within GP Warehouse area with air curtains, strip curtains, and thermal vestibule. Room length must be a minimum of 30 feet. Room width must be a minimum of 18 feet. Room height must be 14 feet clear inside. A minimum of 640 net square feet is required. Provide continuous min. 10’-0” clear width inside thermal vestibule to provide forklift access in

temperature and humidity controlled conditions at refrigerator/freezers. Provide 10’-0” high x 10’-0” wide high-speed (100-in/sec) vertical roll-up doors for forklift access (Rytec Turbo-Seal Freezer door used as basis of design, GSA Contract GS-07F-0052K) for each refrigerator/freezer unit and at each end of thermal vestibule. Provide min. 6” diameter pipe bollard extending to height of door opening with a 6” diameter pipe cross-guard at top of opening to protect hood assembly air curtain blower, drive system, and lighting devices.

(1) Function: Provide space for bulk pallet storage of frozen foods requiring a minimum 0°F (-18°C) temperature for frozen storage.

(2) Adjacency requirements: Adjacent to loading area.

(3) Occupancy: Not occupied.

(4) Furnishings/Fixtures: Furnishings and fixtures in General Purpose Warehouse GFGI. Government to provide cut sheets and proposed layout of GFGI equipment in room.

(5) Floor, wall, and ceiling construction must comply with U.S. Army Technical Bulletin Medical 530 (TB MED 530), Chapter 6.

(g) Secure Storage Area: Provide one Secure Storage area within GP Warehouse area. Room length must be a minimum of 30 feet. Room width must be a minimum of 18 feet. Room height must be 14 feet clear inside. A minimum of 640 net square feet is required. Enclosure construction must comply with Physical Security standards for Secure Storage in accordance with AR 190-51, App. B.

(1) Function: Provide space for secure bulk pallet storage in compliance with AR 190-51, App. B.

(2) Adjacency requirements: Near loading area.

(3) Occupancy: Not occupied.

(4) Furnishings/Fixtures: Furnishings and fixtures in General Purpose Warehouse GFGI. Government to provide cut sheets and proposed layout of GFGI equipment in room.

3.2.2.2 Functional and Area Requirements: Administrative Space

These areas consist of three Administrative office areas: Food Service and IT Offices on ground floor level, and QA Offices on second floor level.

3.2.2.2.1 Functional and Area Requirements: First Floor Administrative Space

(1) Food Service and IT Office Suite, including four private offices with windows, and open office area to accommodate four workstations; file storage room; conference room; and supply storage room.

(a) Private Offices. Room length must be a minimum of 9 feet. Room width must be a minimum of 8 feet. A minimum of 110 net square feet is required. Four rooms are

required. Private offices along exterior walls shall have exterior windows. Interior offices shall have tubular skylights and clerestory daylighting shared with adjoining office areas.

(1) Function: Provide for private offices.

(2) Adjacency requirements: Near open office area and main entrance lobby.

(3) Occupancy: One occupant per office.

(4) Furnishings/Fixtures: GFGI L-shaped steel/laminate desk unit with overhead storage cabinet, task light, tack board, keyboard tray, full modesty panel and storage pedestals (one box/box/file, with pencil tray and file, and one file/file), one four-drawer lateral file, two upholstered, metal guest chairs and one ergonomic task chair.

(b) Open Office. Room length must be a minimum of 25 feet. Room width must be a minimum of 16 feet. A minimum of 480 net square feet is required. One room is required.

(1) Function: Provide open office with reception and waiting area.

(2) Adjacency requirements: Near and observable from main entrance lobby.

(3) Occupancy: Four.

(4) Furnishings/Fixtures: GFGI four L-shaped systems furniture workstations with overhead storage cabinet, task light, acoustical, tackable panels, keyboard tray, vertical storage tower, and one box/box/file storage pedestal with pencil tray and file per occupant; four four-drawer lateral files, four upholstered, metal guest chairs and four ergonomic task chairs.

(c) Conference room. Room length must be a minimum of 20 feet. Room width must be a minimum of 16 feet. A minimum of 342 net square feet is required. One room is required.

(1) Function: Provide conference room space.

(2) Adjacency requirements: Adjacent to Private Offices, Reception Area and near Open Office.

(3) Occupancy: Sixteen

(4) Furnishings/Fixtures: Provide CFCI wall mounted television bracket to support GFGI Flat screen 36 inch television. GFGI furniture includes 15-foot long by 5’-0” deep laminate-top conference table with sixteen conference style, fixed arm chairs, one 30 inch by 60 inch computer desk and chair, and a wall mounted projection screen. Provide one CFCI ceiling mounted projector and electrical power.

(d) File Storage Room. Room length must be a minimum of 20 feet. Room width must be a minimum of 7’-4” feet. A minimum of 142 net square feet is required. One room is required.

(1) Function: Provide file storage.

(2) Adjacency requirements: Near Open Office.

(3) Occupancy: One

(4) Furnishings/Fixtures: GFGI furniture includes eight 24 inch by 48 inch five drawer file cabinets, two 14 inch by 36 inch book shelves and one 30 inch by 60 inch computer desk and chair.

(e) Supply Storage Room. Room length must be a minimum of 9 feet. Room width must be a minimum of 8 feet. A minimum of 105 net square feet is required. One room is required.

(1) Function: Provide office supply storage.

(2) Adjacency requirements: Adjacent to Open Office.

(3) Occupancy: None

(4) Furnishings/Fixtures: Provide GFCI furniture, seven 18 inch deep by 36 inch long, 72 inch high steel unit wall shelving with five adjustable shelves per unit.

(f) IMO Office. Room length must be a minimum of 20 feet. Room width must be a minimum of 22 feet. A minimum of 450 net square feet is required. One room is required.

(1) Function: Provide office space for IMO Technicians.

(2) Adjacency requirements: Adjacent to main entrance Lobby.

(3) Occupancy: Two

(4) Furnishings/Fixtures: GFGI two L-shaped systems furniture workstations with overhead storage cabinet, task light, acoustical, tackable panels, keyboard tray, vertical storage tower and one box/box/file storage pedestal, with pencil tray and file, per occupant; two four-drawer lateral files, two guest chairs and one task chair per occupant; also one 30 inch deep by 60 inch long workbench with static-dispensing surface, continuous rear electrical power strip, and back shelf per occupant.

3.2.2.2.2 Functional and Area Requirements: Second Floor Administrative Space

(1) QA Office Suite including four private offices with windows, and open office area to accommodate four workstations; file storage room; conference room; and supply storage room.

(a) Private Offices. Room length must be a minimum of 9 feet. Room width must be a minimum of 8 feet. A minimum of 110 net square feet is required. Four rooms are required. Private offices along exterior walls shall have exterior windows. Interior private offices shall have tubular skylights and clerestory daylighting shared with adjoining office areas.

(1) Function: Provide for private offices.

(2) Adjacency requirements: Near open office area and elevator lobby.

(3) Occupancy: One occupant per office.

(4) Furnishings/Fixtures: GFGI L-shaped steel/laminate desk unit with overhead storage cabinet, task light, tack board, keyboard tray, full modesty panel and storage pedestals (one box/box/file, with pencil tray and file, and one file/file), one four-drawer lateral file, two upholstered, metal guest chairs and one ergonomic task chair.

(b) Open Office. Room length must be a minimum of 25 feet. Room width must be a minimum of 16 feet. A minimum of 475 net square feet is required. One room is required.

(1) Function: Provide open office with reception and waiting area.

(2) Adjacency requirements: Near private offices and elevator lobby.

(3) Occupancy: Four.

(4) Furnishings/Fixtures: GFGI four L-shaped systems furniture workstations with overhead storage cabinet, task light, acoustical, tackable panels, keyboard tray, vertical storage tower, and one box/box/file storage pedestal with pencil tray and file per occupant; four four-drawer lateral files, four upholstered, metal guest chairs and four ergonomic task chairs.

(c) Conference room. Room length must be a minimum of 19 feet. Room width must be a minimum of 10 feet. A minimum of 185 net square feet is required. One room is required.

(1) Function: Provide conference room space.

(2) Adjacency requirements: Adjacent to Private Offices, Reception Area and near Open Office.

(3) Occupancy: Eight

(4) Furnishings/Fixtures: Provide CFCI wall mounted television bracket to support GFGI Flat screen 36 inch television. GFGI furniture includes 10-foot long by 5’-0” deep laminate top conference table with eight conference style, fixed arm chairs, one 30 inch

by 60 inch computer desk and chair. Provide one CFCI ceiling mounted projector mount and electrical power. GFGI furnishings include a wall mounted projection screen.

(d) Supply Storage Room. Room length must be a minimum of 9 feet. Room width must be a minimum of 8 feet. A minimum of 105 net square feet is required. One room is required.

(1) Function: Provide office supply storage.

(2) Adjacency requirements: Adjacent to Open Office.

(3) Occupancy: None

(4) Furnishings/Fixtures: Provide CFCI furniture, seven 18 inch deep by 36 inch long, 72 inch high steel unit wall shelving with five adjustable shelves per unit.

(e) Classroom. Room length must be a minimum of 40 feet. Room width must be a minimum of 45 feet. A minimum of 2000 net square feet is required.

(1) Function: Provide a multi-use gathering, presentation and learning space for large groups.

(2) Adjacency requirements: Near the main entrance vestibule.

(3) Occupancy: One hundred personnel.

(4) Provision shall be made to accommodate up to 100 personnel for computer-based training, including power and data connections for each seat. Provide one CFCI ceiling mounted projector mount and electrical power. GFGI furniture includes two lecterns with power and data connections, and a GFGI wall mounted projection screen; laminate rectangular tables with wire management, modesty panels, and C-legs; upholstered four-leg base chairs on casters.

3.2.3 Non-Assignable Spaces

The functional areas below account for additional net area within the facility that is not specifically listed in one of the main facility functional areas identified above.

3.2.3.1 Lobby: A vestibule or air lock shall be provided at the main entrance/s and all exterior doors from corridors to the facility with the exception of corridors with exit only exterior doors.

(1) Function: Provides intermediate space between exterior doors and corridors/lobby to reduce drafts, and improve energy efficiency.

(2) Adjacency Requirements: Exterior main entrance.

(3) Total net area as required by design. The net area is part of the overall building gross area.

(4) Other Requirements: Provide walk-off mat.

3.2.3.2 Break Room. Room length must be a minimum of 20 feet. Room width must be a minimum of 15 feet. A minimum of 350 net square feet is required. One break area is required.

(1) Function: Serves as a snack and break area for staff personnel.

(2) Adjacency requirements: near administrative offices and adjacent to warehouse. Veterinary Service Kitchen area wet-wall requirements should be arranged back-to-back with common wet-wall serving Break Room. Veterinary Service Kitchen cannot be open to Break Room due to potential risk for cross-contamination of food-borne bacteria causing health risks to personnel.

(3) Occupancy: 20 personnel

(4) Acoustics: Provide a minimum STC rating of 50 at partitions.

(5) Furnishings/Fixtures: Provide ten linear feet of base and wall cabinets, plastic laminate counter top with back splash and stainless steel sink with strainer, minimum sink size of 16 inches by 16 inches, and tack boards. GFGI equipment includes top freezer refrigerator, 20.6 cubic feet capacity with 6.30 cubic foot freezer capacity, countertop microwave 1100 watts, 1.0 cubic foot capacity, countertop coffee maker, trash/recycle receptacles, two vending machines and five laminate top/metal base style tables, (36 inches wide by 36 inches long) and 20 chairs. Provide CFCI wall mounted television bracket to support GFGI Flat screen 36 inch television.

(6) Provide designated area for collection of recyclable materials to be located as coordinated with user within vicinity of Break Room. A separate enclosed room is not required, but floor area must be delineated and identified with signage. See Appendix KK for more information.

3.2.3.3 Veterinary Kitchen. Room length must be a minimum of 16 feet. Room width must be a minimum of 15 feet. A minimum of 278 net square feet is required. One kitchen room is required.

(1) Function: Serves as kitchen and preparation area in support veterinary service personnel inspection of food samples for determining palatability and application of proper cooking procedures.

(2) Adjacency requirements: Adjacent to Break Room. Veterinary Service Kitchen area wet-wall requirements should be arranged back-to-back with common wet-wall serving Break Room. Veterinary Service Kitchen cannot be open to Break Room due to potential risk for cross-contamination of food-borne bacteria posing a health risk to personnel.

(3) Occupancy: One

(4) Acoustics: Provide a minimum STC rating of 50 at partitions.

(5) Furnishings/Fixtures: See Table 3.2.3.3.1 “GFGI Equipment List for Food Service Veterinary Kitchen”. Provide CFCI 3-bowl stainless steel pot and pan sink (Advance Tabco Model FC-3-2424-24RLX used as basis of design on request of user), equipped with 2-HP waste disposal (In-Sink-Erator Model 22-200-29 used as basis of design on request by user) and CFCI hot water heater booster to provide sanitizing rinse temperature in accordance with TB MED 530. See plumbing section for additional requirements. GFGI equipment cut sheets, see App XX.

(6) Floor, wall, and ceiling construction must comply with U.S. Army Technical Bulletin Medical 530 (TB MED 530), Chapter 6.

Table 3.2.3.3.1: GFCI Equipment List – Food Service Veterinary Kitchen Equipment

EQUIPMENT	MANUFACTURER	MODEL NO.	WIDTH	DEPTH	HEIGHT
STAINLESS WORK TABLE, 5” REAR SPLASH	ADVANCE TABCO	CK-SS-307	84”	30”	35-1/2”
DUAL-TEMP SIDE-BY-SIDE REFRIGERATOR / FREEZER	TURBO AIR	JRF-45-2	49-5/8”	31-1/2”	77”
6-BURNER ELECTRIC RANGE TOP, WITH OVEN	GARLAND	SS686	36”	34-1/4”	47”
ICE MAKER W/ 710-LB BIN, HALF CUBE	MANITOWOC	IY-1004A-B970-K0037	30”	34”	76-1/2”

3.2.3.4 Janitor Closet. Provide one at each group of toilets. Minimum net area shall be 50 square feet each. Room shall be accessed from corridor.

(1) Function. To provide space for service sink and storage of cleaning supplies, soap, and paper products.

(2) Adjacency Requirements. Locate near toilet rooms and break area, one per floor.

(3) Furnishings/Fixtures: Provide one floor mounted mop sink and mop rack for three mops. CFCI equipment includes one 18-inch deep 5-shelf steel shelving unit.

3.2.3.5 Toilet Rooms: Plan toilet rooms based upon the male/female ratio of 1:1. Minimum number of fixtures shall be as required by the International Plumbing Code and UFC 3-420-01, or whichever requires the larger quantity based on occupant load. For calculating the minimum number of plumbing fixtures the number of occupants shall be determined in accordance with the International Building Code Section 1004, occupant load. The exception indicated Section 1004.1.1 shall not apply. Arrange entrances to provide visual privacy at all fixtures.

(1) Function. Provides separate men’s and women’s toilet rooms.

(2) Adjacency Requirements. Toilet rooms shall be provided on each floor level, and a separate unisex toilet room shall be provided near the loading dock of the first floor.

(3) Furnishings/Fixtures: Provide floor mounted water closets, urinals, lavatories and electric drinking fountains (located in corridor adjacent to toilet room entrances). Provide toilet partitions at each water closet and urinal partitions between urinals. Provide the following toilet accessories: one continuous mirror full width of lavatory wall, one paper towel dispenser/waste receptacle per three water closets; one soap dispenser per lavatory; one toilet paper dispenser per water closet; one robe hook on each toilet partition door and one sanitary napkin/tampon disposal per women's water closet. Provide one individual shower compartment (a minimum of 36 inches wide by 36 inches deep) on the first floor level in the men's and one individual shower compartment (a minimum of 36 inches wide by 36 inches deep) in the women's restroom. Showers shall not be provided on the second floor level.

Provide one ADA-compliant shower in the women's toilet room with separate dressing area adjacent to the shower. Provide an ADA-compliant bench in dressing area. Provide four (4) half-height lockers in shower room for temporary storage of clothing.

Provide one ADA-compliant shower in the men's toilet room with separate dressing area adjacent to the shower. Provide an ADA-compliant bench in dressing area. Provide four (4) half-height lockers in shower room for temporary storage of clothing.

3.2.3.6 Mechanical Room/s. Provide dedicated interior spaces and exterior areas for plumbing, fire protection, and HVAC equipment. Ensure design of openings and equipment placement provides adequate clearances for maintenance and replacement of equipment without requiring demolition. Provide floor openings and vertical shaft spaces as necessary.

(1) Function: Mechanical support spaces for the facility.

(2) Adjacency requirements: Main mechanical rooms shall have doors opening to the exterior. Mechanical support spaces shall not be used for storage or other purposes; access to mechanical spaces shall be limited to authorized personnel.

(3) Total net area as required by design. The net area is part of the overall building gross area.

3.2.3.7 Electrical Room/s. Provide dedicated interior spaces and exterior areas for electrical equipment and cable television. Ensure design of openings and equipment placement provides adequate clearances for maintenance and replacement of equipment without requiring demolition.

(1) Function. Electrical support spaces for the facility.

(2) Adjacency requirements: Electrical support spaces shall not be used for storage or other purposes; access to electrical spaces shall be limited to authorized personnel. Electrical rooms shall be located in unclassified areas.

(3) Total net area as required by design. The net area is part of the overall building gross area.

3.2.3.8 Telecommunications Room/s. A telecommunications room is required to manage building connection to telephone, fiber, optic, and other infrastructure. Telecommunications rooms will not be used for storage or other purposes.

(1) Function: Telecommunications service to the facility.

(2) Adjacency Requirements: Locate for economical cable distribution.

(3) Total net area as required by design. Minimum net areas of the rooms shall meet the I3A Technical Guide. The net area is part of the overall building gross area.

3.2.3.9 Corridors. Provide as required for circulation; minimum corridor width shall be as required by applicable codes, but main corridors for the facility shall not be less than six feet.

(1) Function: Provides circulation and egress; movement of equipment for building occupants.

(2) Adjacency requirements: Adjacent to exterior entrances, and interior spaces. Required egress corridors for the office areas shall be independent of required egress from security-controlled areas.
(3) All exterior doors on security-controlled areas shall have exit only doors equipped with delayed egress hardware in accordance with NFPA 101.

(4) Total net area as required by design. The net area of corridors is part of the overall building gross area.

3.2.3.10 Elevator Machine Room. Room size as recommended by elevator manufacturer.

(1) Function: Provides location for elevator machine equipment.

(2) Adjacency requirements: Adjacent to elevator on an exterior wall for ventilation.

(3) Occupancy: N/A

(4) Features: Total net area as required by design. The net area is part of the overall building gross area.

3.2.3.11 Holeless Hydraulic Elevator.

(1) Function: Provides accessible vertical circulation.

(2) Adjacency requirements: Adjacent to elevator machine room.

(3) Occupancy: As permitted for 3500 lb capacity elevator.

(4) Features: Total net area as required by design. The net area is part of the overall building gross area per floor. Capability for ambulance gurney access required.

3.2.4 Floor Plan Diagram

3.2.4.1 General: The floor plan diagram provided indicates relationships between functional areas.

Table 3.2.2.1 Space Allocation Table: General Purpose Warehouse

MINIMUM NET SQUARE FOOTAGE	
GP WAREHOUSE FUNCTION:	**37,010**
REFRIGERATED STORAGE WAREHOUSE	1 @ 640
FREEZER STORAGE WAREHOUSE	3 @ 640 EA.
SECURE STORAGE ROOM	640
FORKLIFT RECHARGE AREA	75
WAREHOUSE PERSONNEL OFFICE	400
UNISEX TOILET (LOADING DOCK AREA)	60
LOADING DOCK/SHIPPING AND RECEIVING	975
HUMIDITY CONTROLLED STORAGE WAREHOUSE SPACE	32,300

Table 3.2.2.2 Space Allocation Table : First Floor Administrative

MINIMUM NET SQUARE FOOTAGE	
FIRST FLOOR ADMINISTRATIVE FUNCTION:	**3,187**
FOOD SERVICE AND IT ADMINISTRATIVE FUNCTION:	
PRIVATE OFFICES (EXTERIOR WALL)	2 @ 160 EA.
PRIVATE OFFICES (INTERIOR WALL)	2 @ 110 EA.
OPEN OFFICES	480
CONFERENCE ROOM	342
SUPPLY STORAGE ROOM	105
IMO OFFICE	450
FILE ROOM	142
BREAKROOM	350
VETERINARY SERVICE (KITCHEN)	278
TOILET AREA	500
MECHANICAL EQUIPMENT ROOM	As Required
MAIN TELECOMMUNICATIONS ROOM	1 @ required SF per I3A
MAIN ELECTRICAL ROOM	As required
ELEVATOR MACHINE ROOM	88
ELEVATOR	82

Table 3.2.2.2.2 Space Allocation Table: Second Floor Administrative

MINIMUM NET SQUARE FOOTAGE	
SECOND FLOOR ADMINISTRATIVE FUNCTION:	**3,695**
QUALITY ASSURANCE ADMINISTRATIVE FUNCTION:	
PRIVATE OFFICES (EXTERIOR WALL)	2 @ 160 EA.
PRIVATE OFFICES (INTERIOR WALL)	2 @ 110 EA.

OPEN OFFICES	480
CONFERENCE ROOM	342
SUPPLY STORAGE ROOM	105
CLASSROOM	2000
TOILET AREA	500
TELECOMMUNICATIONS ROOM (2nd FLOOR)	1 @ required SF per I3A
ELECTRICAL ROOM (2nd FLOOR)	As required
MECHANICAL EQUIPMENT ROOM (2nd FLOOR)	As Required

Table 3.2.3 Total Gross Building Area

TOTAL GROSS BUILDING AREA	
GENERAL PURPOSE WAREHOUSE:	
TOTAL FUNCTIONAL AREA (Tables 3.2.2.1 + 3.2.2.2 + 3.2.2.2.1)	43,892
Non-Assignable & Utilities Factor	1.1367447
TOTAL ALLOWABLE AREA (GSF)	**49,894**

3.3 ARCHITECTURAL REQUIREMENTS

3.3.1 Hardware

3.3.1.1 Finish Hardware: All hardware shall be consistent and shall conform to ANSI/BMHA standards for Grade 1. All requirements for hardware keying shall be coordinated with the Contracting Officer. Extension of the existing Installation keying system shall be provided. The Installation's keying system is Best Access Systems B.A.S.I.S. G. Cores shall have not less than seven pins; cylinders shall have key-removable type cores. Disassembly of knob or lockset shall not be required to remove core from lockset. Locksets for mechanical, electrical and communications rooms only shall be keyed to the existing Installation Master Keying System. HVAC terminal units that are accessed from a central corridor shall have a deadbolt to minimize protrusion into corridor. Plastic cores are unacceptable. Provide closers for all exterior doors, all doors opening to corridors and as required by codes. Exit devices shall be installed all building egress doors.

3.3.1.2 All hardware must be security type and heavy duty for maximum wear resistance and must comply with all Americans with Disabilities Act (ADA-ABA) requirements. Exterior doors shall include cipher locks.

3.3.1.3 Auxiliary Hardware: Provide wall or floor stops for all exterior doors that do not have overhead holder/stops. Provide other hardware as necessary for a complete installation.

3.3.1.4 Fire Door Hardware: Hardware for fire doors shall be installed in accordance with the requirements of applicable codes. Exit devices installed on fire doors shall have a visible label bearing the marking "Fire Exit Hardware". Other hardware installed on fire doors, such as locksets, closers, and hinges shall have a visible label or stamp indicating that the hardware items have been approved by an approved testing agency for installation on fire-rated doors. Hardware for smoke-control door assemblies shall be installed in accordance with applicable codes.

3.3.2 Special Acoustical Requirements

3.3.2.1 Exterior walls and roof/floor/ceiling assemblies, doors, windows and interior partitions shall be designed to provide for attenuation of external noise sources such as airfields in accordance with applicable criteria, but no less than the following:

(a) Interior partitions – STC 45

(b) Exterior walls – STC 42

(c) Doors and frames – STC 25

3.3.2.2 Due to the operation of mechanical and electrical systems and devices, sound conditions and levels for interior spaces shall not exceed levels as recommended by ASHRAE handbook criteria. Provide acoustical treatment for drain lines and other utilities to prevent noise transmission into the offices and other areas requiring noise suppression.

3.3.3 EXTERIOR DESIGN OBJECTIVES

3.3.3.1 Provide durable and easily maintainable materials. Do not use exterior materials that require periodic repainting or similar refinishing processes. Material exposed to weather shall be factory pre-finished, integrally colored or provided with intrinsic weathering finish.

3.3.3.2 Exterior Walls: Where Exterior Insulation and Finish Systems (EIFS), or any other material except CMU or other Masonry material is used as exterior finish material, it shall be in conjunction with a CMU wainscot. EIFS shall be “high-impact” type and shall be “drainable” type. Masonry units shall be tested for efflorescence. Efflorescence testing shall conform to the provisions of ASTM C 67. CMU construction shall comply with the provisions of ASTM C 1400.

3.3.3.3 Roof: Minimum roof slope for membrane roof systems shall be 2” inches per foot. Minimum roof slope for pitched roof systems shall be as recommended by roof system manufacturer. Membrane roof systems shall be fully adhered. Structural standing seam metal roofs shall comply with the requirements of ASTM E 1592. Roof system shall be Underwriters Laboratory (UL 580 Class 90) rated or Factory Mutual Global (FM) I-90 rated. Roof system shall comply with applicable criteria for fire rating. Roof drainage to be via external gutters into splash blocks

(a) Roof Mounted Equipment: Roof mounted equipment shall not be used unless absolutely necessary. If roof mounted equipment is required: provide permanent access walkways and platforms to protect roof. Roof mounted equipment on membrane roof systems shall be screened by the roof parapet.

(b) Roof access from building exterior is prohibited.

(c) Roof Access - At least one interior means of access to the roof and top of administrative space is required.

(d) Personal fall arrest systems shall be required for workers servicing roof and roof-mounted equipment. All personal fall arrest system (PFAS) shall meet the requirements contained in ANSI/ASSE Z359.1. Full body harnesses labeled to meet the requirements of the ANSI A10.14 shall not be used. All necessary anchorages for attachment of personal fall arrest equipment shall be provided in accordance with applicable codes and criteria.

3.3.3.4 Trim and Flashing: Gutters, downspouts, and fascias shall be factory pre-finished metal and shall comply with SMACNA Architectural Sheet Metal Manual.

3.3.3.5 Bird Habitat Mitigation: The Contractor shall provide details in the design necessary to eliminate the congregating and nesting of birds at, on, and in the facility.

3.3.3.6 Exterior Doors and Frames:

(a) Means Of Egress - Provide for 36”w x 7’-0”h passage exit doors. Design for maximum diversion occupancy equally disbursed around perimeter of building: as is indicated on floor plan.

(b) Main Entrance Doors: Provide aluminum storefront doors and frames with Architectural Class 1 anodized finish, fully glazed, with medium or wide stile for entry into lobbies or corridors. Provide doors complete with frames, framing members, sub frames, transoms, sidelights, trim, applied mountings, and accessories. Framing systems shall have thermal-break design. Storefront systems shall be capable of withstanding area wind loads, thermal and structural movement required by location and project requirements, and shall comply with applicable codes and criteria.

(c) Other Exterior Doors: Provide galvanized insulated hollow metal exterior doors for entry to all spaces other than corridors, lobbies, or reception/waiting rooms. Doors and frames shall comply with applicable codes and criteria. Doors shall be heavy duty (grade 2) insulated with 18-gauge steel cladding; top edge closed flush; A60 galvannealed. Frames shall be 12-gauge, with continuously welded mitered corners and seamless face joints. Doors and frames shall be constructed of hot dipped zinc coated steel sheet, complying with ASTM A653, Commercial Steel, Type B, minimum A40 coating weight; factory primed. Fire-rated openings shall comply with applicable codes, and the requirements of the labeling authority. Door and frame installation shall comply with applicable codes and criteria.

(d) Electrically Operated Sectional Vertical Lift Doors: Doors shall be industrial class, highlift sectional vertical lift doors, electrically operated, with auxiliary hand chain override. In the open position, the horizontal portion of the door shall be aligned with the angle of the roof structural elements; and shall be no more than 6 inches below the bottom of the roof structural elements. Doors shall consist of horizontal sections hinged together which operate in a system of tracks to completely close the door opening in the closed position and make the full width and height of the door opening available for use in the open position. Provide a door locking mechanism on the interior. Provide a permanent label on the door indicating the name and address of the manufacturer. Doors, components, and methods of installation shall be designed in accordance with DASMA 102. Minimum design wind load shall be 20 psf. Maximum wind load deflection of the door shall not exceed the door height in inches divided by 120 and the door width in inches divided by 120. Doors shall be operable during design wind load when tested in accordance with ASTM E 330. Door sections shall be formed from hot-dipped galvanized steel not lighter than 16 gauge with longitudinal integral reinforcing ribs. Meeting rails shall have interlocking joints to ensure a weather tight closure and alignment for full width of the door. Provide sections of the height indicated or the manufacturer's standard. Do not exceed 24 inch height for intermediate sections. Bottom sections may be varied to suit door height. Do not exceed 30 inch height for bottom section. Door sections shall be insulated and shall provide a "U" factor of 0.14 or less when tested in accordance with ASTM C 1363. Interior of door sections shall be covered with steel sheets of not lighter than 20 gauge to completely enclose the insulating material. Provide galvanized steel tracks not lighter than 10 gauge. Provide vertical tracks with continuous steel angle not lighter than 10 gauge for installation to walls. Incline vertical track through use of adjustable brackets to obtain a weather tight closure at jambs. Reinforce horizontal track with galvanized steel angle; support from track ceiling construction with galvanized steel angle and cross bracing to provide a rigid installation. Provide hinges, brackets, rollers, locking devices, and other hardware required for complete installation. Counterbalance doors with an oil-tempered, helical-wound torsion spring mounted on a steel shaft. Provide adjustable spring tension; connect spring to doors with cable through cable drums. Provide cable safety factor of at least 7 to 1. Provide operators of the type recommended by the door manufacturer. Operators shall include electric motor, machine-cut reduction gears, steel chain and sprockets, magnetic brake, brackets, pushbutton controls, limit switches, magnetic reversing contactor, a manual operator as specified below for emergency use and other accessories necessary for operation. The electric operator shall be designed so that the motor may be removed without disturbing the limit switch timing and without affecting the manual operator. The manual operator shall be clutch controlled so that it may be engaged and disengaged from the floor; operation shall not affect limit switch timing. Provide an electrical or mechanical device that disconnects the motor from the operating mechanism when the manual operator is engaged. Provide a

galvanized, endless chain operating over a sprocket. Extend chain to within 4 feet of the floor and mount on inside of building. Obtain reduction by use of roller chain and sprocket drive or gearing. Provide chain cleat and pin for securing operator chain. The force required to operate the door shall not exceed 35 pounds. Each door motor shall have an enclosed, across-the-line type, magnetic reversing contactor, thermal overload and under voltage protection, solenoid-operated brake, limit switches, and control switches. Locate control switches at least 5 feet above the floor so the operator will have complete visibility of the door at all times. Control equipment shall conform to NEMA ICS 1 and NEMA ICS 2. Control enclosures shall be NEMA ICS 6, Type 12 or Type 4, except that contactor enclosures may be Type 1. Each control switch station shall be of the three-button type; buttons shall be marked "OPEN," "CLOSE," and "STOP." The "OPEN" and "STOP" buttons shall require only momentary pressure to operate. The "CLOSE" button shall require constant pressure to maintain the closing motion of the door. If the door is in motion and the "STOP" button is pressed or the "CLOSE" button released, the door shall stop instantly and remain in the stop position; from the stop position, the door may be operated in either direction by the "OPEN" or "CLOSE" buttons. Pushbuttons shall be full-guarded to prevent accidental operation. Provide limit switches to automatically stop doors at the fully open and closed positions. Limit switch positions shall be readily adjustable. Limit switches shall be mounted/protected in such a manner to minimize external damage/accidents. Provide a safety device on the bottom edge of electrically operated doors. The device shall immediately stop and reverse the door in its closing travel upon contact with an obstruction in the door opening or upon failure of the device or any component of the control system and cause the door to return to the full open position. The door-closing circuit shall be automatically locked out and the door shall be operable manually until the failure or damage has been corrected. Do not use the safety device as a limit switch. Each sectional vertical lift door shall be furnished with a “headache bar” on the interior and exterior side of the facility. Set bottom of each “headache bar” 6-inches below bottom of door head height and 4-feet from face of door. Each interior “headache bar” shall be suspended from a pair of steel cables mounted on the roof structure. Each exterior “headache bar” shall be suspended from a pair of steel cables mounted on the roof structure or suspended from a pair of steel cables mounted on the upper arm of a structural steel tube structure set in concrete on one side of the door. Use one structural steel tube structure on each side of doors wider than 10-feet. Length of “headache bar” shall be minimum 80% the width of the door and shall be centered on the door width.

3.3.3.7 Exterior Windows: Provide insulated, high efficiency window systems, with thermally broken frames complying with applicable codes and criteria. Operable windows shall be furnished with locks, and fiberglass or aluminum insect screens removable from the inside. Curtain wall systems shall be capable of withstanding area wind loads, thermal and structural movement required by location and project requirements, and shall comply with applicable codes and criteria. Window sills shall be designed to discourage bird nesting.

3.3.3.8 Exterior Glass and Glazing: Material and installation shall comply with applicable codes and criteria.

3.3.3.9 Thermal Insulation: Provide exterior wall, floor, and roof/ceiling assemblies with thermal transmittance (U-values) required to comply with the proposed energy calculations for the facilities. Insulation shall not be installed directly on top of suspended acoustical panel ceiling systems. Acoustic insulation and air barrier components shall be required in addition to thermal insulation.

3.3.3.10 Exterior Louvers: Exterior louvers shall have bird screens, security screens to prevent illegal entry and shall be designed to exclude wind-driven rain. Exterior louvers shall be made to withstand wind loads in accordance with the applicable codes. Wall louvers shall bear the Air Movement & Control Association (AMCA) International certified ratings program seal for air performance and water penetration in accordance with AMCA 500-D and AMCA 511. Louver finish shall be factory applied.

3.3.3.11 Provide Tubular skylights for daylighting. Velux TGR/TMR Commercial Tubular Daylight Device or Solatube Commercial Tubular Daylight Device used as basis of design.

3.3.4 INTERIOR DESIGN OBJECTIVES

3.3.4.1 General: Provide sustainable materials and furnishings that are easily maintained and replaced. Maximize use of day lighting. Provide interior surfaces that are easy to clean and light in color. Interior spaces should be structured to allow maximum flexibility for future modifications. **Note:** the use of translucent panels on sloped metal roofs is not permissible.

3.3.4.2 Signage: Provide interior signage as required by applicable codes and criteria.

3.3.4.3 Bulletin Boards: Provide one bulletin board at each entry vestibule. Bulletin board shall be 4'-0" high and 6'-0" wide. Bulletin boards shall have a header panel and shall have lockable, glazed doors.

3.3.4.4 Corner Guards: Provide surface mounted, high impact resistant, integral color, snap-on type resilient corner guards, extending from floor to ceiling for wall and column outside corners in high traffic areas such as corridors, waiting areas, lobbies, conference and multi-purpose rooms. Factory fabricated end closure caps shall be furnished for top and bottom of surface mounted corner guards.

3.3.4.5 Chair Rail: Chair rails shall be installed in areas prone to hi-impact use such as corridors, waiting areas, conference rooms and break areas.

3.3.4.6 Guardrails. Guardrails shall protect all exterior walls with minimum 17" high single guard rails and all interior walls with minimum 44" high double guard rails adjacent to the defined warehouse storage area.

3.3.4.7 Casework: Provide cabinets complying with AWI Quality Standards. Countertops shall have waterfall front edge. Toilet countertops and all other countertops with sinks shall have integral coved backsplash. Toilet countertops shall be minimum ½-inch thick cast 100 percent acrylic polymer solid surfacing material with waterfall front edge and integral coved backsplash.

3.3.4.8 Fire Extinguisher Cabinets and Mounting Brackets: Furnish and install semi – recessed fire extinguisher cabinets and mounting brackets as required by applicable codes and criteria. Furnish a list of installed fire extinguisher cabinets and mounting brackets (including location, type and size) to the Contracting Officer's Representative.

3.3.4.9 Furnish and install a 3200 series Knox Box on warehouse building exterior with recessed hinge lid adjacent to main entrance. Furnish and install a 4400 series Knox Box surface-mounted on steel post standard at main gate per Fort Bragg Fire Department mounting requirements.

3.3.4.10 Interior Doors and Frames:

(a) Wood Doors: Provide flush solid core wood doors with Grade A hardwood face veneer for transparent finish. Stile edges shall be non-finger jointed hardwood compatible with face veneer. Provide wood doors at all interior locations except noted otherwise. Provide window panel on all wooden doors exiting into a corridor.

(b) Insulated Hollow Metal Doors: Comply with applicable codes and criteria. Doors shall be minimum Level 3, Physical Performance Level A, Model 2; factory primed. Provide insulated hollow metal doors at mechanical, electrical and telecommunications rooms, toilets, janitor closets, storage rooms, and high traffic areas.

(c) Hollow Metal Frames: Comply with ANSI A250.8/SDI 100. Frames shall be minimum Level 3, 16 gauge, with continuously welded mitered corners and seamless face joints; factory primed. All door frames shall be hollow metal frames reinforced at lock assemblies.

(d) Fire-rated and Smoke Control Doors and Frames: Comply with applicable codes, criteria and requirements of labeling authority.

(e) STC ratings shall be of the sound classification required and shall include the entire door and frame assembly.

3.3.4.11 Window Treatment: Provide horizontal mini blinds at all exterior windows. Uniformity of window covering color and material shall be maintained to the maximum extent possible throughout each building. Window stools shall be minimum ½ inch thick cast 100 percent acrylic polymer solid surfacing material. Uniformity of window covering color and material shall be maintained throughout the building.

3.3.4.12 Mold Mitigation: The Designer of Record shall provide details in the design analysis and design showing steps taken to mitigate the potential growth of mold and mildew in the facility.

3.3.4.13 Drinking Fountains- Provide drinking fountains in accordance with the International Plumbing Code and UFC 3-420-01, or whichever requires the larger quantity.

3.3.4.14 Toilet Accessories: Furnish and install the items listed below and all other toilet accessories necessary for a complete and usable facility. All toilet accessories shall be Type 304 stainless steel with satin finish. Toilet accessories shall include the following:

(a) Glass Mirror/Shelf – 18 inch by 24 inch glass mirror on stainless steel frame with shelf at each lavatory

(b) Hands free liquid soap dispenser at each lavatory

(c) Hands free paper towel dispenser

(d) Waste receptacle- recess mounted at each lavatory/toilet area

(e) Sanitary napkin disposal at each female toilet

(f) Toilet paper dispenser – lockable multiple roll toilet paper dispenser at each toilet

(g) Sanitary toilet seat cover dispenser – at each toilet stall

(h) Grab bars – as required by ADA-ABA

3.3.5 Finishes

Designers are not limited to the minimum finishes listed in this paragraph and are encouraged to offer higher quality finishes. A minimum of 1% surplus or additional flooring tile (for each type used) shall be provided by the Contractor for replacement/repair purposes.

3.3.5.1 Minimum Paint Finish Requirements

(a) All paints used shall be listed on the "Approved Product List" of the Master Painters Institute (MPI). Application criteria shall be as recommended by MPI guide specifications for the substrate to be painted and the environmental conditions existing at the project site.

(b) Exterior surfaces, except factory pre-finished material or exterior surfaces receiving other finishes shall be painted a minimum of one prime coat and two finish coats. Paints having a lead content over 0.06 percent by weight of nonvolatile content are unacceptable. Paints containing zinc-chromate, strontium-chromate, mercury or mercury compounds, confirmed or suspected human carcinogens shall not be used on this project. Exterior paints and coating products shall be classified as containing low volatile organic compounds (VOCs) in accordance with MPI criteria. Application criteria shall be as recommended by MPI guide specifications. Provide an MPI Gloss Level 5 Finish (semi-gloss), unless otherwise specified.

(c) Interior surfaces, except factory pre-finished material or interior surfaces receiving other finishes, shall be painted a minimum of one prime coat and two finish coats. Paints having a lead content over 0.06 percent by weight of nonvolatile content are unacceptable. Paints containing zinc-chromate, strontium-chromate, mercury or mercury compounds, confirmed or suspected human carcinogens shall not be used on this project. Interior paints and coating products shall contain a maximum level of 150 grams per liter (g/l) of VOCs for non-flat coatings and 50 g/l of VOCs for flat coatings. Provide an MPI Gloss Level 5 Finish (semi-gloss) in wet areas and a flat finish in all other areas.

3.3.5.2 Minimum Interior Finish Requirements

(a) Wall, ceiling and floor finishes and movable partitions shall conform to the requirements of the IBC, NFPA and UFC 3-600-01 Fire Protection Engineering for Facilities. Where code requirements conflict, the most stringent code requirement shall apply.

(b) Carpet shall be minimum of 2 yarn ply, modular tile conforming to ISO 2551, ASTM D 418, ASTM D 5793, ASTM D 5848, solution dyed, tufted, cut and loop pile, commercial 100% branded (federally registered trademark) nylon continuous filament. Vinyl composition tile (VCT) shall be minimum 1/8 inch thick, conforming to ASTM F 1066, Class 2, through pattern tile, Composition 1, asbestos free, with color and pattern uniformly distributed throughout the thickness of the tile.

(c) Walls: All wall finish shall be minimum 5/8” painted gypsum board, except where stated otherwise. Gypsum board shall be paperless gypsum board. Use impact resistant paperless gypsum board in corridors and storage rooms. Gypsum wall board shall not be used as a wall finish in the warehouse area below 8 feet above finish floor. The warehouse side of all gypsum wall board partitions shall have a minimum 20 gauge sheet metal finish up to a height of 8 feet above the finish floor.

(d) Interior paint shall be semi-gloss in wet areas and flat in all other areas.

(e) 24” x 24” lay-in Acoustical Ceilings will be used throughout the occupied areas at 9’ AFF, unless otherwise noted. Tiles shall be omni-directional, mildew/moisture resistant. Ceilings shall have a minimum noise reduction coefficient NRC of .60.

3.3.5.3 Interior Finishes Table

3.4.5.3.1 Interior Finishes Table

INTERIOR FINISHES	Floors					Base		Walls		Ceiling			
	Vinyl Tile	Carpet Tile	Ceramic Tile	Removable Integral Walk-Off Mat	Sealed Concrete	Resilient Base	Ceramic Base	Painted Gypsum Wall Board	4' High Ceramic Tile Wainscot	Painted Gypsum Wall Board	2x2 Acoustical Ceiling Tile	Painted Structure	Exposed Structure
GENERAL PURPOSE WAREHOUSE - 49,894 SF													
FOOD SERVICE AND IT ADMINISTRATIVE		■				■		■			■		
QUALITY ASSURANCE ADMINISTRATIVE		■				■		■			■		
CONFERENCE ROOM		■				■		■			■		
FILE STORAGE ROOM	■					■		■			■		
OFFICE SUPPLY STORAGE ROOM	■					■		■			■		
CLASSROOM		■				■		■			■		
BREAK ROOM	■					■		■			■		
TOILET ROOMS			■				■	■	■	■			
JANITOR CLOSET					■			■		■			
STAIRWELL	■					■		■			■		
VESTIBULE				■				■			■		
CORRIDOR		■				■		■			■		
MECHANICAL / ELECTRICAL ROOM					■			■				■	
TELECOMMUNICATIONS ROOM					■			■				■	
RECYCLABLE MATERIAL STORAGE ROOM					■			■				■	
REFRIGERATED STORAGE ROOM					■			■					■
FREEZER STORAGE ROOM					■			■					■
SECURE STORAGE ROOM					■			■				■	
SHIPPING / RECEIVING TRUCK DOCK					■			■				■	
OPEN WAREHOUSE SPACE					■			■				■	

3.4 STRUCTURAL REQUIREMENTS

Design and construct as a complete system in accordance with APPLICABLE CRITERIA.

Live Loads: Design live loads shall be per the IBC or as shown.

(a) Slab on Grade:

Warehouse:

Fork lift wt. - 6,000 lb

(b) Elevated Slabs: Loads as per IBC.

(c) Shelving shall be constructed in a back-to-back double row configuration with no interspersed single rows.

3.5 MECHANICAL REQUIREMENTS

3.5.1 Plumbing

3.5.1.1 Plumbing system shall be designed and installed in accordance with the International Plumbing Code (IPC). Fixtures shall be of the water saving type and approved for its use per the IPC. Hot water shall be provided for all lavatories. Refer to paragraph 5 for domestic water metering requirements.

3.5.1.2 Gas systems (if applicable) shall be designed and installed in accordance with NFPA 54. Refer to paragraph 5 for gas metering requirements.

3.5.1.3 Locate emergency eyewash/shower stations in accordance with OSHA 1910/1926 and ANSI Z358.1. Provide water heaters as required. Provide floor drains at eye wash/shower stations.

3.5.1.4 Provide floor drains in toilets to facilitate proper maintenance.

3.5.1.5 Urinals shall have a maximum flush volume of 0.5 gal (1.9L) in compliance with ANSI/ASHRAE/USGBC/IES Standard 189.1

3.5.1.6 Provide a hose bib and a floor drain with a removable sediment bucket at each floor scrubber charger equipment location to facilitate proper maintenance. Hose bibs shall have ¾ inch hose connections.

3.5.1.7 Provide a hose bib(s) in the Warehouse Area, near the entrances of the 1 Refrigerated Storage and 3 Freezer Storages to facilitate proper cleaning of these storage areas. The hose bib(s) shall be located such that a 100 ft hose will reach all areas of the refrigerated storage and freezer storages. Hose bibs shall have ¾ inch hose connections.

3.5.1.8 Provide a trench drain outside the entrances of each of the 1 Refrigerated Storage and 3 Freezer Storages in the Warehouse Area to facilitate proper cleaning of these storage areas. The length of the trench drain(s) shall at a minimum be as long as the width of each of the storage area entrances. The trench drain(s) shall be set into the floor with the flange and grating flush with the surrounding floor level. The trench drain(s) and gratings shall be constructed of type 304, 18-8 stainless steel polished to a #4 finish. The gratings shall be removable, without the use of tools. The gratings shall adequately support the point load of the loaded forklift utilized in the facility. Each drain shall have a 4-inch waste connection and shall be complete with an integral stainless steel sump drain with removable stainless steel sediment basket. The trench drain(s) shall have covered corners and all joints and seams integrally welded, ground and polished. Trench drain(s) shall have built-in pitches towards waste drains. Trench drain(s) shall have an integral flange around the perimeter and integral support ledge for the grating.

3.5.1.9 In the Break Room provide a domestic water supply and shutoff for a top freezer with icemaker refrigerator. The ice maker connection shall be provided in a standard manufactured recessed wall box. The top freezer with icemaker refrigerator shall be GFGI.

3.5.1.10 In the Veterinary Kitchen provide a domestic water supply and shutoff for an icemaker machine. The icemaker connection shall be provided in a standard manufactured recessed wall box. Also, provide a drain to serve the icemaker machine. The icemaker machine shall be GFGI.

3.5.1.11 The Veterinary Kitchen's three bowl sink and the Break Room's sink shall both be provided with a garbage disposal that complies with the requirements of the latest edition of TB MED 530.

3.5.1.12 The Veterinary Kitchen's three bowl sink shall be provided with a booster water heater capable of maintaining hot water temperatures that comply with the manual washing and rinsing requirements of the latest edition of TB MED 530.

3.5.1.13 In the Veterinary Kitchen provide floor drainage in compliance with the requirements of the latest edition of TB MED 530.

3.5.2 Heating, Ventilating and Air-Conditioning (HVAC)

*2
3.5.2.1 All offices and public spaces shall be heated and air-conditioned. Offices and public spaces shall have user adjustable controls of +/- 2 degrees F with a set point of 74 degrees F for cooling and 72 degrees F for heating. Relative humidity shall be kept stable with a set point of 50 percent RH and must not exceed 65 percent. Installation shall be in accordance with the International Mechanical Code (IMC). Restrooms, copy rooms, and janitor closets shall be continuously exhausted during occupied hours. Air conditioning for communications rooms shall remain active at all times and be independently controlled per I3A requirements. Air-conditioned office and public space zoning shall be based on exterior envelope exposures (and floor levels for multilevel offices). Where VAV systems are used, limit individual zones to a maximum of 2,500 cfm. Air handling units shall run continuously during occupied hours. Outdoor ventilation air required by ASHRAE 62.1 shall be continuous during occupied hours.
*2
3.5.2.2 All warehouse and storage areas shall be heated and air-conditioned separate from the office and public spaces. Warehouse and storage areas shall have user adjustable controls of +/- 5 degrees F with a set point of 75 degrees F for cooling and 65 degrees F for heating.~~Temperature will be kept stable with a set point of 70 degrees F +/- 10 degrees F).~~ Relative humidity shall be kept stable with a set point of 50% RH and must not exceed 65%. ~~Indoor design conditions: 1) Cooling 78F, 50RH; 2) Heating 65F.~~ Load calculations shall be based on an evaluation of anticipated throughput/duty cycle for the building. Installation shall be in accordance with the IMC. Only freeze protection is required in the fire riser room. Air handlers shall run continuously. Outdoor ventilation air required by ASHRAE 62.1 shall be continuous. Action to minimize temperature stratification shall be taken
*2
3.5.2.3 Refer to Paragraph 5 for temperature control information. Indoor design temperatures provided in paragraphs 3.5.2.1 and 3.5.2.2 supersede indoor design temperatures in paragraph 5.9.2.

3.5.2.4 Offices, public spaces, warehouse and storage spaces shall be maintained at a slight positive pressure above that of the building exterior at all times. Restrooms and janitor closets shall be maintained at a lower pressure than adjoining spaces. Office and public spaces shall be maintained at a pressure equal to or greater than that of warehouse and storage spaces. Supply air for pressurization/ventilation shall be provided by dedicated outdoor air equipment that is mechanical-refrigeration-based plus capable of recovering ventilation exhaust energy. Recirculation of exhaust into interior spaces by any means is not acceptable.

3.5.2.5 Mechanical rooms shall be accessible by means of exterior doors. Mechanical rooms shall be sized for ease of service, maintenance, and replacement of HVAC equipment. Rooms shall be designed so that equipment is not “trapped” when it needs to be replaced. Roof top mounted equipment shall be accessible by means of fully caged roof ladders. Ladder access shall be from inside the building only. Air conditioning equipment is not permitted on sloped metal roofs. An approved lockable roof hatch having an opening at least as large as the ladder shall be provided. Equipment located outside (on the ground) shall be enclosed in a security-screened equipment yard on equipment pads of 6” or more in height above grade. Sound/noise shall be a consideration in the selection of all equipment.

3.5.2.6 Per 29 CFR 1910 and other applicable criteria provide for sufficient diffusion and ventilation of gases from forklift storage batteries and floor scrubber storage batteries to prevent the accumulation of explosive mixtures. To accomplish this fork lift battery and floor scrubber battery charging station ventilation systems shall be provided as a part of this project. They shall be designed and constructed to work effectively with Government-furnished, Contractor-installed (GFCI) forklift charging equipment and floor scrubber charging equipment. Ventilation system design shall be based on all relevant factors including the number of lifts and scrubbers and their usage, and whether or not batteries will be charged “in place” or placed in a charging rack. Construction of a room, a hood, or some combination thereof to completely capture the fumes is acceptable so long as it does not negatively impact warehouse

productivity. Components of the system such as the exhaust duct, fan, and hood material, etc. shall be of corrosion-resistant construction. Exhaust discharge shall be high enough above the roofline to be safe and effective and shall be accomplished so as to not result in exterior degradation of the structure. The chargers shall be interlocked with the exhaust system so that even a fan failure cannot create an unsafe condition. Spark-resistant fan construction (per AMCA) and necessary explosion-proof wiring and lighting shall be provided.

3.5.2.7 All exterior personnel doors and vertical lift doors in the warehouse and storage areas, except for mechanical/electrical room doors, shall be provided with air curtains. The entrances of each of the 1 Refrigerated Storage and 3 Freezer Storages in the Warehouse Area shall be provided with air curtains. The entrances of the Thermal Vestibule in the Warehouse Area shall be provided with air curtains. The air curtains shall activate when the doors are opened and deactivate when the doors are closed. The air curtain shall run continuously while the doors are open. The air curtains shall be electric operated, commercial, high velocity, and NSF Certified. The air curtain's air velocities shall comply with the requirements of the latest edition of TB MED 530.

3.5.2.8 The operating temperatures for the 1 Refrigerated Storage and 3 Freezer Storages in the Warehouse Area shall be as indicated in the latest edition of TB MED 530.
*2
3.5.2.9 The Veterinary kitchen's range top, with oven shall be provided with a CFCI Type I kitchen hood. The Veterinary kitchen's three bowl sink shall be provided with a CFCI Type II kitchen hood. Kitchen hood systems shall be stainless steel all welded construction and shall include lights, filters, grease troughs and fire protection systems. Hoods shall be UL and NSF approved/certified/listed. Hoods shall be certified to meet the International Mechanical Code required velocities for the service application. If face discharge hoods are utilized, they shall be provided with tempered makeup air. Makeup air shall be tempered to 85 degrees Fahrenheit for cooling and 60 degrees for heating. Indicate kitchen hood functions by designating "Type II Condensate Laden Air Hood" and "Type I Grease Laden Air Hood" in the hood schedule. Kitchen hood systems shall be designed and installed in compliance with NFPA 96. Kitchen hoods shall be UL rated in accordance with UL 710. Kitchen hoods shall comply with the lastest edition of TB MED 530.

3.5.3 Fire Protection

3.5.3.1 Fire Suppression System – The fire suppression system shall be designed in accordance with UFC 3-600-1 and NFPA 13 (latest edition). This covers all occupancies, including all warehouse occupancies, storage commodities, and storage arrangements.

3.5.3.2 Warehouse and storage areas shall be protected utilizing Early Suppression Fast Response (ESFR) type sprinklers. ESFR shall be designed and installed in accordance with NFPA 13. ESFR system shall be on a separate fire riser from the rest of the building. (Note: Maximum roof slope for ESFR is 2/12 and maximum roof height is 45'.)

3.5.3.3 Fire pumps, if required, shall be installed in accordance with NFPA 20. Fire pumps shall be installed in a separate room with access from the exterior. Fire pump room shall have one-hour separation from the rest of the building.

3.5.3.4 Water storage tanks, if required, shall meet the requirements of UFC 3-600-1 and NFPA 22. Water tanks must be supervised by the building fire alarm system.

3.5.3.5 Fire department connection (FDC) shall be provided in accordance with NFPA requirements.

3.5.3.6 Post Indicator Valve (PIV) shall be provided in accordance with NFPA requirements. PIV shall be supervised by the building fire alarm system.

3.6 ELECTRICAL AND TELECOMMUNICATIONS REQUIREMENTS

Select electrical characteristics of the power system to provide a safe, efficient, and economical distribution of power based upon the size and types of loads to be served. Use distribution and utilization voltages of the highest level that is practical for the load to be served. The effect of nonlinear loads such as computers, other electronic equipment and electronic ballasts shall be considered and accommodated as necessary. Voltage drop shall not exceed the maximum allowed per ASHRAE 90.1. Transient voltage surge protection shall be provided on service equipment. Additional requirements can be found in Appendix BB: General Interior Electrical Requirements.

3.6.1 Power

3.6.1.1 Power shall be provided for all installed equipment requiring power including Government Furnished Contractor Installed (GFCI) equipment and all GFGI equipment. Power shall be provided for all special equipment such as motorized vertical lift doors, dock levelers, and forklift battery chargers, etc. Power poles are not allowed. All receptacle circuits shall be 20A. The following shall also be provided:

3.6.1.2 Duplex receptacles shall be provided per NFPA 70 and in conjunction with the proposed equipment (ceiling projectors, motorized projector screen, TV's, etc.) and furniture layouts. Provide a quad receptacle adjacent to each voice/data or data communications outlet.

3.6.1.3 In addition to receptacles required elsewhere in the RFP, provide one duplex receptacle per 10 ft of wall space (and minimum one duplex receptacle per wall where wall is less than 10 ft) in each office for general purpose use.

3.6.1.4 For housekeeping purposes, provide a minimum of one 120V, 20A duplex receptacle per corridor. No point along corridor wall at 18 inches above finished floor shall be more than 25 feet from a receptacle.

3.6.1.5 Provide 120V duplex GFI receptacles mounted adjacent to lavatories. Provide a minimum of one for every two adjacent lavatories. Each single lavatory shall also be provided a receptacle.

3.6.1.6 Provide 120V duplex GFI receptacles above countertop in the Break Room area such that no point along the countertop is more than 2 feet from a receptacle. Provide receptacles for a refrigerator, an ice machine, and vending machines. Each countertop, refrigerator, ice machine, and vending machine receptacle shall be on a dedicated circuit.

3.6.1.7 A minimum of four 120V, 20A duplex receptacles shall be provided in each mechanical room and four in each electrical room in addition to NFPA 70 requirements.

3.6.1.8 Provide exterior GFI duplex receptacles on the building exterior walls near entrances.

3.6.1.9 Provide duplex receptacles in the warehouse storage areas. Provide a duplex receptacle at each structural column in the warehouse storage areas, mounted 18" AFF, minimum.

3.6.1.10 Provide 120V duplex receptacles along warehouse wall mounted 18" AFF. No point along a wall shall be more than 12.5 ft from a receptacle.

3.6.1.11 Provide dedicated power receptacles for a minimum of two forklift battery chargers at one location. Provide power circuits for other equipment, such as floor scrubber chargers, shredding machines, stretch wrap machines, etc.

3.6.1.12 Sandhills Utility Service will provide and install an automatic transfer switch (ATS) and generator, sized for the entire building load. Provide and install conduit and wiring from the main electrical panel to the ATS. Coordinate other provisions for the ATS and generator with Sandhills Utility Service.

3.6.1.13 Provide an alarm to indicate loss of power for the refrigeration/freezing units. Coordinate alarm transmission requirements with the User.

3.6.1.14 Provide and install a wire-guided forklift system and all associated accessories to provide a fully functional and operational system. Coordinate the exact routing of the system with the User and the layout of the storage racks.

3.6.2 Grounding

3.6.2.1 Grounding shall be provided in accordance with NFPA 70 and UFC 3-580-01: Telecommunications Building Cabling Systems Planning and Design.

3.6.2.2 Provide lightning protection system in accordance with NFA 780. Provide UL master label for lightning protection system.

3.6.2.3 The grounding design shall take into account site specific soil conditions at Ft. Bragg.

3.6.3 Interior Lighting

3.6.3.1 Interior lighting (illumination levels, lighting controls, lighting power densities, etc.) shall be provided in accordance with the IESNA Handbook, 10th edition, ASHRAE 90.1, 2007, and NFPA 101.

3.6.3.2 For safety purpose, lighting design shall consider preventing any shadow effects with equipment operation and lumen output for lamps shall not be affected by operating temperature.

3.6.3.3 Conference room shall be illuminated to a level 30 foot candles and be controlled by dimmers.

3.6.3.4 Mechanical rooms, supply areas, and electrical rooms shall be illuminated to a level of 30 foot-candles.

3.6.3.5 Provide exterior mounted lighting fixture for each dock door. Lighting fixture shall be mounted on a 60” (minimum) arm capable of directing light in various locations. Provide housing composed of die cast aluminum and hood with wire guard.

3.6.3.6 Provide daylight harvesting controls in areas that have skylights.

3.6.3.7 Emergency ballasts shall be rated for 90 minutes, and shall not rely on the GFGI ATS and generator to meet the NFPA emergency lighting requirements.

3.6.4 Exterior Lighting

3.6.4.1 All lighting shall be controlled by a photocell and timer.

3.6.4.2 Provide building mounted lighting for each personnel door.

3.6.4.3 Provide a wall pack light mounted above each dock door.

3.6.4.4 Provide lighting for truck dock area.

3.6.5 Telecommunications System

3.6.5.1 The telecommunication system and spaces shall be provided per the I3A, the Ft. Bragg NEC IDC (Appendix AA), and all other applicable criteria. Telecommunications outlets shall be based on functional purpose of the space within the building, the minimum outlet densities specified in the I3A, and in accordance with other provisions of this RFP. If conflict occurs between requirements of the applicable criteria and specific requirements within the RFP, the specific requirements shall govern.

3.6.5.2 Provide voice and data connection capability to all workstations in accordance with the I3A Technical Criteria and the Ft. Bragg NEC Installation Design Criteria (Appendix AA). Provide two voice/data outlets in each private office. Provide a voice/data outlet per workstation in open office areas. Provide 20 data outlets in each classroom.

3.6.5.3 Provide wireless access point (WAP) cabling in accordance with the I3A Technical Criteria to support the Ft. Bragg Network Enterprise Center (NEC) Installed Wireless Intrusion Detection System. Coordinate WAP locations with the Ft. Bragg NEC after contract award.

3.6.5.4 Equipment racks shall be 84 inches in height.

3.6.5.5 Install a PE jacketed, copper tracer wire for all new non-metallic communications duct runs. Install tracer wire above the trenched ducts or back pull the wire along with the HPDE duct when boring. Tracer wire shall enter the manhole so it is not cut or severed during installation. Also, install metallic marking tape, approximately 18 inches below grade.

3.6.5.6 Provide a data outlet adjacent to each personnel door in the warehouse storage areas.

3.6.6 CATV

3.6.6.1 All CATV outlet boxes, connectors, cabling, and cabinets shall conform to the I3A unless indicated otherwise. All horizontal cabling shall be homerun from the CATV outlet to the location of the head-end equipment. See paragraph 6, PROJECT SPECIFIC REQUIREMENTS, for additional requirements.

3.6.7 Mass Notification

3.6.7.1 Provide a combination fire alarm/mass notification system per Paragraph 6.13.5. The MNS shall be in accordance with UFC 4-021-01 and Appendix CC (IBMNS/PAS). The MNS shall be compatible with Ft. Bragg's base-wide system. Provide an annunciator panel in the entry vestibule.

3.6.8 Paging System

3.6.8.1 A zoned paging system shall be provided throughout each building and integrated into the telephone system. System may utilize mass notification amplifiers and speakers, but shall be overridden by the mass notification system if mass notification system is activated while the paging system is being utilized. System shall have a minimum capacity of eight zones. Facility shall be zoned per user requirements.

3.6.9 Security Infrastructure (Security Equipment Not in Contract)

3.6.9.1 The security infrastructure shall be installed to support Government furnished equipment including cameras, door alarms, and motion sensors. These devices will be utilized at all exterior entrances with the exception of utility room entrances. Infrastructure shall consist of conduit, pull wire and outlet boxes per user requirements.

3.7 FIRE ALARM REQUIREMENTS

3.7.1 Provide a combination fire alarm/mass notification system The fire alarm system shall be completely addressable. This system shall consist of a Fire Alarm Panel, a communication device, initiating devices and notification devices. Class A addressable systems shall be installed. The fire alarm system shall be compatible with the base-wide system. See additional requirements in Paragraph 6.13.4. Provide an annunciator panel in the entry vestibule.

3.7.2 All software, software locks, special tools and any other proprietary equipment required to maintain, add devices to or delete devices from the system, or test the Fire Alarm system shall become property of the Government and be furnished to the Contracting Officer's Representative prior to final inspection of the system.

3.7.3 The fire alarm system shall be designed by a professional Fire Protection Engineer and installed by a National Institute for Certification of Engineering Technologies (NICET) Level 3 technician.

4.0 APPLICABLE CRITERIA

Unless a specific document version or date is indicated, use criteria from the most current references, including any applicable addenda, unless otherwise stated in the contract or task order, as of the date of the Contractor's latest accepted proposal or date of issue of the contract or task order solicitation, whichever is later. In the event of conflict between References and/or Applicable Military Criteria, apply the most stringent requirement, unless otherwise specifically noted in the contract or task order.

4.1. INDUSTRY CRITERIA

Applicable design and construction criteria references are listed in Table 1 below. This list is not intended to include all criteria that may apply or to restrict design and construction to only those references listed. See also Paragraph 3 for additional facility-specific applicable criteria.

Table 1: Industry Criteria

Air Conditioning and Refrigeration Institute (ARI)	
ARI 310/380	Packaged Terminal Air-Conditioners and Heat Pumps
ARI 440	Room Fan-Coil and Unit Ventilator
ANSI/ARI 430-99	Central Station Air Handling Units
ARI 445	Room Air-Induction Units
ARI 880	Air Terminals
Air Movement and Control Association (AMCA)	
AMCA 210	Laboratory Methods of Testing Fans for Rating
American Architectural Manufacturers Association (AAMA)	
AAMA 605	Voluntary Specification Performance Requirements and Test Procedures for High Performance Organic Coatings on Aluminum Extrusions and Panels
AAMA 607.1	Voluntary Guide Specifications and Inspection Methods for Clear Anodic Finishes for Architectural Aluminum
AAMA 1503	Voluntary Test Method for Thermal Transmittance and Condensation Resistance of Windows, Doors, and Glazed Wall Sections
American Association of State Highway and Transportation Officials (AASHTO)	

	Roadside Design Guide [guardrails, roadside safety devices]
	Standard Specifications for Transportation Materials and Methods of Sampling and Testing [Road Construction Materials]
	Standard Specifications for Structural Supports for Highway Signs, Luminaires and Traffic Signals
	Guide for Design of Pavement Structures, Volumes 1 and 2 [pavement design guide]
	A Policy of Geometric Design of Highways and Streets
American Bearing Manufacturers Association (AFBMA)	
AFBMA Std. 9	Load Ratings and Fatigue Life for Ball Bearings
AFBMA Std. 11	Load Ratings and Fatigue Life for Roller Bearings
American Boiler Manufacturers Association (ABMA)	
ABMA ISEI	Industry Standards and Engineering Information
American Concrete Institute	
ACI 302.2R	Guide for Concrete Slabs that Receive Moisture-Sensitive Flooring Materials
ACI 318	Building Code Requirements for Structural Concrete
ACI SP-66	ACI Detailing Manual
ACI 530	Building Code Requirements for Masonry Structures
ADA Standards for Accessible Design	
See US Access Board	ADA and ABA Accessibility Guidelines for Buildings and Facilities, Chapters 3-10.
American Institute of Steel Construction (AISC)	
	Manual of Steel Construction – 13th Edition (or latest version)

American Iron and Steel Institute	
AISI S100	North American Specification for the Design of Cold-Formed Steel Structural Members
American National Standards Institute 11 (ANSI)	
ANSI Z21.10.1	Gas Water Heaters Vol. 1, Storage water Heaters with Input Ratings of 75,000 Btu per Hour or less
ANSI Z124.3	American National Standard for Plastic Lavatories
ANSI Z124.6	Plastic Sinks
ANSI Z21.45	Flexible Connectors of Other Than All-Metal Construction for Gas Appliances
ANSI/IEEE C2	National Electrical Safety Code
ANSI/AF&PA NDS	National Design Specification for Wood Construction
American Society of Civil Engineers (ASCE)	
ASCE 7	Minimum Design Loads for Buildings and Other Structures
ASCE 77	Manual of Practice No. 77, Design and Construction of Urban Stormwater Management Systems
ASCE 60	Gravity Sanitary Sewer Design and Construction (ASCE Manuals and Reports on Engineering Practice No. 60)
ASCE/SEI 31-03	Seismic Evaluation of Existing Buildings [Existing Building Alteration/Renovation]
ASCE/SEI 41-06	Seismic Rehabilitation of Existing Buildings [Existing Building Alteration/Renovation]
American Society of Heating, Refrigerating and Air Conditioning Engineers (ASHRAE)	
ASHRAE 90.1	ANSI/ASHRAE/IESNA 90.1, Energy Standard for Buildings Except Low-Rise Residential Buildings
ASHRAE Guideline 0	The Commissioning Process

ASHRAE Guideline 1.1	The HVAC Commissioning Process
ASHRAE Handbooks	Fundamentals, HVAC Applications, Systems and Equipment, Refrigeration (Applicable, except as otherwise specified)
ASHRAE Standard 15	Safety Standard for Refrigeration Systems
ASHRAE Standard 62.1	Ventilation for Acceptable Indoor Air Quality
ASHRAE Standard 55	Thermal Environmental Conditions for Human Occupancy (Design portion is applicable, except where precluded by other project requirements.)
ASHRAE Standard 189.1-2009	Standard for the Design of High-Performance Green Buildings (ANSI Approved; USGBC and IES Co-sponsored), - (APPLICABLE TO THE EXTENT SPECIFICALLY CALLED OUT IN THE CONTRACT)
American Society of Mechanical Engineers International (ASME)	
ASME BPVC SEC VII	Boiler and Pressure Vessel Code: Section VII Recommended Guidelines for the Care of Power Boilers
ASME A17.1	Safety Code for Elevators and Escalators
ASME B 31 (Series)	Piping Codes
American Water Works Association (AWWA)	
	Standards [standards for water line materials and construction]
American Welding Society	
	Welding Handbook
	Welding Codes and Specifications (as applicable to application, see International Building Code for example)
Architectural Woodwork Institute (AWI)	
Latest Version	AWI Quality Standards
Associated Air Balance Council (AABC)	

AABC MN-1	National Standards for Testing and Balancing Heating, Ventilating, and Air Conditioning Systems
	AABC Associated Air Balance Council Testing and Balance Procedures
ASTM International	
ASTM C1060-90(	Standard Practice for Thermographic Inspection of Insulation Installations in Envelope Cavities of Frame Buildings
ASTM E 779	Standard Test Method for Determining Air Leakage Rate by Fan Pressurization
ASTM E1827-96	Standard Test Methods for Determining Airtightness of Buildings Using an Orifice Blower Door
Builders Hardware Manufacturers Association (BHMA)	
ANSI/BHMA	The Various BHMA American National Standards
Building Industry Consulting Service International	
	Telecommunications Distribution Methods Manual (TDMM)
	Customer-Owned Outside Plant Design Manual (CO-OSP)
Code of Federal Regulations (CFR)	
49 CFR 192	Transportation of Natural and Other Gas by Pipeline: Minimum Federal Safety Standards
10 CFR 430	Energy Conservation Program for Consumer Products
Consumer Electronics Association	
CEA 709.1B	Control Network Protocol Specification
CEA 709.3	Free-Topology Twisted-Pair Channel Specification
CEA 852	Tunneling Component Network Protocols Over Internet Protocol Channels
Electronic Industries Association (EIA)	

ANSI/EIA/TIA 568	Structured Cabling Series
ANSI/EIA/TIA 569	Commercial Building Standard for Telecommunications Pathways and Spaces (includes ADDENDA)
ANSI/TIA/EIA-606	Administrative Standard for the Telecommunications Infrastructure of Commercial Buildings
J-STD EIA/TIA 607	Commercial Building Grounding and Bonding Requirements for Telecommunications
Federal Highway Administration (FHWA)	
	Manual on Uniform Traffic Control Devices for Streets and Highways [signage and pavement markings for streets and highways]
FHWA-NHI-01-021	Hydraulic Engineering Circular No. 22, Second Edition, URBAN DRAINAGE DESIGN MANUAL
Illuminating Engineering Society of North America (IESNA)	
IESNA RP-1	Office Lighting
IESNA RP-8	Roadway Lighting
IESNA Lighting Handbook	Reference and Application
Institute of Electrical and Electronics Engineers Inc. (IEEE)	
	Standard for Use of the International System of Units (SI): the Modern Metric System
Standard 1100	Recommended Practice for Powering and Grounding Sensitive Electronic Equipment
International Code Council (ICC)	
IBC 2009	International Building Code Note: All references in the International Building Code to the International Electrical Code shall be considered to be references to NFPA 70. All references in the International Building Code to the International Fuel Gas Code shall be considered to be references to NFPA 54 and

	NFPA 58. All references in the International Building Code to the International Fire Code and Chapter 9 shall be considered to be references to Unified Facilities Criteria (UFC) 3-600-01.
IMC	International Mechanical Code – Note: For all references to “HEATING AND COOLING LOAD CALCULATIONS”, follow ASHRAE 90.1 Note: For all references to “VENTILATION”, follow ASHRAE 62.1
IRC	International Residential Code
IPC	International Plumbing Code
IEC	Energy Conservation Code (IEC) –Applicable only to the extent specifically referenced herein. Refer to Paragraph 5, ENERGY CONSERVATION requirements.
IGC	International Gas Code - not applicable. Follow NFPA 54, National Fuel Gas Code and NFPA 58, Liquified Petroleum Gas Code.
International Organization for Standardization (ISO)	
ISO 6781:1983	Qualitative detection of thermal irregularities in building envelopes – infrared method
LonMark International (LonMark)	
LonMark Interoperability Guidelines	(available at www.lonmark.org), including: Application Layer Guidelines, Layer 1-6 Guidelines, and External Interface File (XIF) Reference Guide
LonMark Resource Files	(available at www.lonmark.org), including Standard Network Variable Type (SNVT) definitions
Metal Building Manufacturers Association (MBMA)	
	Metal Building Systems Manual
Midwest Insulation Contractors Association (MICA)	
	National Commercial and Industrial Insulation Standards Manual

National Association of Corrosion Engineers International (NACE)	
NACE RP0169	Control of External Corrosion on Underground or Submerged Metallic Piping Systems
NACE RP0185	Extruded, Polyolefin Resin Coating Systems with Adhesives for Underground or Submerged Pipe
NACE RP0285	Corrosion Control of Underground Storage Tank Systems by Cathodic Protection
NACE RP0286	Electrical Isolation of Cathodically Protected Pipelines
National Electrical Manufacturers Association (NEMA)	
National Environmental Balancing Bureau (NEBB)	
	Procedural Standards Procedural Standards for Testing Adjusting Balancing of Environmental Systems
National Fire Protection Association (NFPA)	
NFPA 10	Standard for Portable Fire Extinguishers
NFPA 13	Installation of Sprinkler Systems
NFPA 13R	Residential Occupancies up to and Including Four Stories in Height Sprinkler Systems
NFPA 14	Standard for the Installation of Standpipes and Hose Systems
NFPA 20	Installation of Centrifugal Fire Pumps
NFPA 24 NFPA 25	Standard for the Installation of Private Fire Service Mains and Their Appurtenances [underground fire protection system design] Inspection, Testing And Maintenance Of Water-Based Fire Protection Systems
NFPA 30	Flammable and Combustible Liquids Code
NFPA 30A	Motor Fuel Dispensing Facilities and Repair Garages
NFPA 31	Installation of Oil Burning Equipment

NFPA 54	National Fuel Gas Code
NFPA 58	Liquefied Petroleum Gas Code
NFPA 70	National Electrical Code
NFPA 70E	Standard for Electrical Safety in the Workplace
NFPA 72	National Fire Alarm Code
NFPA 76	Fire Protection of Telecommunications Facilities
NFPA 80	Standard for Fire Doors and Fire Windows
NFPA 90a	Installation of Air Conditioning and Ventilating Systems
NFPA 96	Standard for Ventilation Control and Fire Protection of Commercial Cooking Operations
NFPA 101	Life Safety Code
NFPA 780	Standard for the Installation of Lightning Protection Systems
National Roofing Contractor's Association (NRCA)	
	Roofing and Waterproofing Manual
National Sanitation Foundation, International	
NSF/ANSI Std. 2, 3, 4, 5, 6, 7, 8, 12, 13, 18, 20, 21, 25, 29, 35, 36, 37, 51, 52, 59, 169	Food Equipment Standards
ANSI/UL Std. 73, 197, 471, 621, 763	Food Equipment Standards
CSA Std. C22.2 No. 109, 120, 195	Food Equipment Standards
Occupational Safety and Health Administration (OSHA)	
Title 29, Part 1926	OSHA Construction Industry Standards, Title 29, Code of Federal

	Regulations, Part 1926, Safety and Health Regulations for Construction
Plumbing and Drainage Institute (PDI)	
PDI G 101	Testing and Rating Procedure for Grease Interceptors with Appendix of Sizing and Installation Data
PDI WH201	Water Hammer Arrestors
Precast Concrete Institute	
PCI Design Handbook	Precast and Prestressed Concrete
Sheet Metal and Air Conditioning Contractor's National Association (SMACNA)	
SMACNA HVAC Duct Construction Standards	HVAC Duct Construction Standards - Metal and Flexible
SMACNA Architectural Manual	Architectural Sheet Metal Manual
SMACNA HVAC TAB	HVAC Systems - Testing, Adjusting and Balancing
State/Local Regulations	
	State Department of Transportation Standard Specifications for Highway and Bridge Construction
	Sedimentation and Erosion Control Design Requirements
	Environmental Control Requirements
	Storm Water Management Requirements
Steel Door Institute (SDI)	
ANSI A250.8/SDI 100	Standard Steel Doors and Frames
Steel Deck Institute	
	SDI Diaphragm Design Manual
Steel Joist Institute	

	Catalog of Standard Specifications and Load Tables for Steel Joists and Joist Girders
Underwriters Laboratories (UL)	
UL 96A	Installation Requirements for Lightning Protection Systems
UL 300	Standard for Safety for Fire Testing of Fire Extinguishing Systems for Protection of Restaurant Cooking Areas
UNITED STATES ACCESS BOARD: U.S. ARCHITECTURAL AND TRANSPORTATION BARRIERS COMPLIANCE BOARD	
ADA and ABA Accessibility Guidelines for Buildings and Facilities	ABA Accessibility Standard for DoD Facilities Derived from the ADA and ABA Accessibility Guidelines: Specifically includes: ABA Chapters 1 and 2 and Chapters 3 through 10. Use this reference in lieu of IBC Chapter 11. Excluded are: (a) Facilities, or portions of facilities, on a military installation that are designed and constructed for use exclusively by able-bodied military personnel (See Paragraph 3 for any reference to this exclusion). (b) Reserve and National Guard facilities, or portions of such facilities, owned by or under the control of the Department of Defense, that are designed and constructed for use exclusively by able-bodied military personnel. (See paragraph 3 for any reference to this exclusion).
U.S. DEPARTMENT OF HEALTH AND HUMAN SERVICES	
	FDA National Food Code
U.S. GREEN BUILDING COUNCIL (USGBC)	
LEED-NC	Green Building Rating System for New Construction & Major Renovations
	Application Guide for Multiple Buildings and On-Campus Building Projects

4.2. MILITARY CRITERIA

The project shall conform to the following criteria. Certain design impacts and features due to these criteria are noted for the benefit of the offeror. However, all requirements of the referenced criteria will be applicable, whether noted or not, unless otherwise specified herein.

4.2.1. Energy Policy Act of 2005 (Public Law 109-58) (applies only to the extent specifically implemented in the contract, which may or may not directly cite or reference EPACT)

4.2.2. Energy Independence and Security Act of 2007- "EISA" (applies only to the extent specifically implemented in the contract)

4.2.3. Executive Order 12770: Metric Usage In Federal Government

(a) Metric design and construction is required except when it increases construction cost. Offeror to determine most cost efficient system of measurement to be used for the project.

4.2.4. TB MED 530: Occupational and Environmental Health Food Sanitation

4.2.5. Unified Facilities Criteria (UFC) 3-410-01FA: Heating, Ventilating, and Air Conditioning - applicable only to the extent specified in paragraph 5, herein.

4.2.6. UFC 3-101-0 Architectural Design, (Applies only to the extent specifically implemented herein).

4.2.7. UFC 3-210-10, Low Impact Development, applicable only to the extent specified herein.

4.2.8. UFC 3-600-01 Design: Fire Protection Engineering for Facilities. Use the latest edition of the IBC in coordination with this UFC. Use Chapters 3, 6, 7, 33 and UFC 3-600-01. If any conflict occurs between these Chapters and UFC 3-600-01, the requirements of UFC 3-600-01 take precedence. Use UFC 3-600-01 in lieu of IBC Chapters 4, 8,9,10.

4.2.9. UFC 4-010-01 DoD Minimum Antiterrorism Standards for Buildings

4.2.10. UFC 4-023-03 Design of Buildings to Resist Progressive Collapse (Use most recent version, regardless of references thereto in other publications)

(a) Note the option to use tie force method or alternate path design for Occupancy Category II.

4.2.11. UFC 4-021-01 Design and O&M: Mass Notification Systems

4.2.12. UFC 3-420-01, Plumbing Systems, (Applicable only to the extent specifically implemented herein).

4.2.13. Technical Criteria for Installation Information Infrastructure Architecture (I3A)

(a) Email: DetrickISECI3Aguide@conus.army.mil

4.2.14. U.S. Army Information Systems Engineering Command (USAISEC) SECRET Internet Protocol (IP) Router Network (SIPRNET) Technical Implementation Criteria (STIC).. See Paragraph 3 for applicability to specific facility type. May not apply to every facility. This is mandatory criteria for those facilities with SIPRNET.

4.2.14.1. Draft Guide Specification for Section 27 05 28 PROTECTIVE DISTRIBUTION SYSTEM (PDS) FOR SIPRNET COMMUNICATIONS SYSTEMS, found at http://mrsi.usace.army.mil/rfp/Shared%20Documents/SECTION_270528-v3.pdf

5.0 GENERAL TECHNICAL REQUIREMENTS

This paragraph contains technical requirements with general applicability to Army facilities. See also Paragraph 3 for facility type-specific operational, functional and technical requirements. Residential or similar grade finishes and materials are not acceptable for inclusion in these buildings, unless otherwise specifically allowed. References to ASHRAE Standard 189.1 are to ASHRAE Standard 189.1-2009 unless otherwise specified in this Paragraph.

5.1. SITE PLANNING AND DESIGN

5.1.1. STANDARDS AND CODES: The site planning and design shall conform to APPLICABLE CRITERIA and to paragraph 6, PROJECT SPECIFIC REQUIREMENTS.

5.1.2. SITE SELECTION: Meet the allowable site requirements of ASHRAE Standard 189.1, Section 5.3, Manadatory Provisions, and either Section 5.4, Prescriptive Option, or Section 5.5, Performance Option; and ASHRAE Standard 189.1, Section 10.3.2.1.1, unless otherwise specified by the current Department of Defense Minimum Antiterrorism Standards for Buildings, UFC 4-010-01.

5.1.3. SITE PLANNING OBJECTIVES: Group buildings in configurations that create a sense of community and promote pedestrian use. See Paragraph 3 for additional site planning requirements relating to building functions.

5.1.3.1. Enclosures and Visual Screens: Provide enclosures and or visual screening devices for Outdoor Utility such as dumpsters, emergency generators, transformers, heating, ventilation, and air conditioning units from streetscape and courtyard views to limit visual impact. Enclosures shall be compatible with the building they serve and accessible by vehicle. The location of dumpsters can have a significant visual impact and should be addressed as part of an overall building design and incorporated in site planning.

5.1.3.2. Dumpster Pads: Where included in the project, dumpster pads shall be concrete (minimum of 8 inches thick on 4 inch base course, unless site conditions dictate more conservative requirements) and directly accessible by way of a paved service drive or parking lot with adequate overhead clearance for collection vehicles. Provide space at dumpster areas for recycling receptacles. Coordinate with Installation on recycling receptacle types, sizes and access requirements and provide space at dumpster areas to accommodate them.

5.1.3.3. Vehicular Circulation: Apply design vehicle templates provided by the American Association of State Highway and Transportation Officials (AASHTO) to the site design. The passenger car class includes passenger cars and light trucks, such as vans and pick-ups. The passenger car template is equivalent to the non-organizational – privately owned vehicle (POV). The truck class template includes single-unit trucks, recreation vehicles, buses, truck tractor-semi-trailer combinations, and trucks or truck tractors with semi-trailers in combination with full trailers. Provide vehicle clearances required to meet traffic safety for emergency vehicles, service vehicles, and moving vans. Provide required traffic control signage Site entrances and site drive aisles shall maximize spacing between drives, incorporate right-angle turns, and limit points of conflict between traffic. Design Services Drives to restrict access to unauthorized vehicles by removable bollards, gates, or other barriers to meet Anti-Terrorism/Force Protection (ATFP) requirements. Orient service drives to building entrances other than the primary pedestrian entry at the front of the building.

5.1.3.4. Emergency Vehicle Access: Provide Emergency Vehicle Access around the facility and shall be in accordance with AT/FP requirements. Maintain a 33-foot clear zone buffer for emergency vehicles, designed to prevent other vehicles from entering the AT/FP standoff to the building.

5.1.3.5. Stormwater Management and Low Impact Design: Employ design and construction strategies (Best Management Practices, or BMPs) that reduce stormwater runoff, reduce discharges of polluted

water offsite and maintain or restore predevelopment hydrology with respect to temperature, rate, volume, quality and duration of flow. See "Technical Guidance on Implementing the Stormwater Runoff Requirements for Federal Projects under Section 438 of the Energy Independence and Security Act (EISA)" (http://www.epa.gov/owow/NPS/lid/section438/pdf/final_sec438_eisa.pdf) and Paragraph 6, PROJECT SPECIFIC requirements for additional information. BMPs used to treat runoff must be capable of removing 80% of the average annual postdevelopment total suspended solids (TSS) load based on existing monitoring reports. BMPs are considered to meet these criteria if:

(a) They are designed in accordance with standards and specifications from a state or local program that has adopted these performance standardsOR

(b) There exists infield performance monitoring data demonstrating compliance with the criteria. Data must conform to accepted protocol (e.g., Technology Acceptance Reciprocity Partnership [TARP], Washington State Department of Ecology) for BMP monitoring.

(c) In addition, meet the requirements of ASHRAE Standard 189.1, Section 5.3, and either Section 5.4, Prescriptive Option or Section 5.5 Performance Option for Site Development and UFC 3-210-10. If any of the requirements in this subsection are prohibited by state law, state law shall take precedence but only as to those requirements found to be in conflict.

5.1.3.6. Erosion and Sedimentation Control: Meet the requirements of ASHRAE Standard 189.1, Section 10.3.1.3.

5.1.4. EXTERIOR SIGNAGE: Provide exterior signage in accordance with Appendix H, Exterior Signage. Provide exterior NO SMOKING signage that conveys building and grounds smoking policy. Meet the requirements of ASHRAE Standard 189.1, Section 8.3.1.4 (a).

5.1.5. EXISTING UTILITIES: Base utilities maps and capacities for this site are included as part of this RFP. See paragraph 6 for more detailed information.

5.2. SITE ENGINEERING

5.2.1. STANDARDS AND CODES: The site engineering shall conform to APPLICABLE CRITERIA.

5.2.2. SOILS:

5.2.2.1. Subsurface Conditions Report: A report has been prepared to characterize the subsurface conditions at the project site and is appended to these specifications. The report provides a general overview of the soil and geologic conditions with detailed descriptions at discrete boring locations. The Contractor's team shall include a licensed geotechnical engineer to interpret the report and develop earthwork and foundation recommendations and design parameters in which to base the contractor's design. If any additional subsurface investigation or laboratory analysis is required to better characterize the site or develop the final design, the Contractor shall perform it under the direction of a licensed geotechnical engineer. There will be no separate payment for the cost of additional tests. If differences between the Contractor's additional subsurface investigation and the government provided soils report or the reasonably expected conditions require material revisions in the design, an equitable adjustment may be made, in accordance with the provisions of the Differing Site Conditions clause. The basis for the adjustment would be the design and construction appropriate for the conditions described in the Government furnished report or the reasonably expected conditions, in comparison with any changes required by material differences in the actual conditions encountered, in accordance with the terms of contract clause Differing Site Conditions.

5.2.2.2. Geotechnical Evaluation Report: The contractor's licensed geotechnical engineer shall prepare a final geotechnical evaluation report, to be submitted along with the first foundation design submittal, as described in Section 01 33 16, *Design After Award*.

5.2.3. VEHICLE PAVEMENTS: (as applicable to the project)

5.2.3.1. Pavement Requirements: Except in Department of Energy (DOE) Climate Zones 6, 7, and 8, meet ASHRAE Standard 189.1, Section 5.3.2.1. If the project is located in DOE Climate Zones 6, 7, or 8, design procedures and materials shall conform to one of the following: 1) the USACE Pavement Transportation Computer Assisted Structural Engineering (PCASE) program, 2) American Association of State Highway and Transportation Officials (AASHTO) or, 3) the applicable state Department of Transportation standards in which the project is located. See Paragraph 5.2.2.2 and Section 01 33 16 for required information for the Contractor's geotechnical evaluation report. The minimum flexible pavement section shall consist of 2 inches of asphalt and 6 inches of base or as required by the pavement design, whichever is greater, unless specifically identified by the Government to be a gravel road. Design roads and parking areas for a life expectance of 25 years with normal maintenance. Parking area for tactical vehicles (as applicable to the project) shall be Portland Cement Concrete (PCC) rigid pavement design. For concrete pavements, submit joint layout plan for review and concurrence. Design pavements for military tracked vehicles (as applicable to the project) IAW USACE PCASE. Traffic estimates for each roadway area will be as shown on the drawings or listed in Section 01 10 00 Paragraph 6.4.4. Pavement markings and traffic signage in all DOE Climate Zones shall comply with the Installation requirements and with the Manual on Uniform Traffic Control Devices. Develop a Transportation Management Plan that meets the requirements of ASHRAE Standard 189.1, Section 10.3.2.4.1.

5.2.3.2. Parking Requirements. This subsection is applicable only to parking lots/areas that permit POV parking:

(a) General Parking Requirements:

(1) Design POV parking spaces for the type of vehicles anticipated, but shall be a minimum of 9 ft by 18 ft for POVs, except for two wheel vehicles.

(2) Handicap POV parking. All handicap POV parking lots (where applicable in the facility specific requirements) shall meet the ADA and ABA Accessibility Guidelines for accessible parking spaces.

(3) All handicap POV parking lots (where applicable in the facility specific requirements) shall meet the ADA and ABA Accessibility Guidelines for accessible parking spaces. Design POV parking spaces for the type of vehicles anticipated, but shall be a minimum of 9 ft by 18 ft for POVs, except for two wheel vehicles.

(b) Preferred Parking:

(c) Low-Emitting and Fuel Efficient Vehicles:

5.2.3.3. Sidewalks: Design the network of walks throughout the complex (where applicable) to facilitate pedestrian traffic among facilities, and minimize the need to use vehicles. Incorporate sidewalks to enhance the appearance of the site development, while creating a sense of entry at the primary patron entrances to the buildings. Minimum sidewalk requirements are in Paragraph 3, where applicable and/or paragraph 6 and/or site plans, where applicable. In addition, meet the requirements of ASHRAE Standard 189.1, Section 5.3.2.1.

5.2.4. CATHODIC PROTECTION: Provide cathodic protection systems for all underground metallic systems and metallic fittings/portions of non-metallic, underground systems, both inside and outside the building 5 foot line that are subject to corrosion. Coordinate final solutions with the installation to insure an approach that is consistent with installation cathodic protection programs.

5.2.5. UTILITIES: See Paragraph 6.4.6 for specific information on ownership of utilities and Paragraph 5.9.3.5 below for utility metering requirements.

5.2.6. PERMITS: The CONTRACTOR shall be responsible for obtaining all permits (local, state and federal) required for design and construction of all site features and utilities.

5.2.7. IRRIGATION: Landscape and irrigation systems, if provided, shall comply with ASHRAE Standard 189.1, Section 6.3, Mandatory Provisions, and either Section 6.4, Prescriptive Option, or Section 6.5, Performance Option. In addition, meet the requirements of ASHRAE Standard 189.1, Standard 10.3.2.

5.2.8. EPA WATERSENSE PRODUCTS AND CONTRACTORS: Except where precluded in this Paragraph or by other project requirements, use EPA WaterSense labeled products and irrigation contractors that are certified through a WaterSense labeled program where available.

5.3. COMMISSIONING: Execute total building commissioning practices in order to verify performance of building components and systems and ensure that Owner Project Requirements (OPR) are met. Adopt and follow the requirements of ASHRAE Standard 189.1 Section 10.3.1.2, ASHRAE Guideline 0, ASHRAE Guideline 1.1, LEED Energy and Atmosphere (EA) Prerequisite 1 and LEED EA Credit 3. Do not use the sampling techniques discussed in ASHRAE Guideline 1.1 and in ASHRAE Guideline 0. Commission 100% of the HVAC controls and equipment. Commissioning activities shall be consistent with the Pre-Design Phase, Design Phase, Construction Phase and Occupancy and Operations Phase. Perform and document a post occupancy system monitoring and inspection to review building operation within 12 months after beneficial occupancy. Post occupancy system monitoring and inspection results will be used to verify compliance with the Owner's Project Requirements (OPR), to revise and update the Systems Manual and for completion of the Final Commissioning Report.

5.3.1. The Government in its capacity as the Commissioning Authority (CxA), shall oversee the execution of commissioning process activities to assure the owner's project requirement are met by validating performance of building components and systems. The Government, will provide the Commissioning Contractor (CxC). The CxC roles and responsibilities are outlined in the commissioning plan. The Design-Build Contractor shall provide for commissioning support in the execution of building commissioning as outlined in the D-B Contractor's commissioning support obligations. Refer to attached commissioning plan, OPR and D-B Contractor's commissioning support obligations for complete description of D-B Contractor's commissioning requirements. The Contracting Officer's Representative will act as the Owner's representative in performance of duties spelled out under OWNER in Annex F of ASHRAE Guideline 0. All buildings with Minimum LEED Silver requirement will earn LEED Credit EA3 Enhanced Commissioning.

5.3.2. Plan Development: Meet the requirements for the development of the Maintenance Plan and Service Life Plan in ASHRAE Standard 189.1, Section 10.3.2.

5.4. ARCHITECTURE AND INTERIOR DESIGN.

5.4.1. STANDARDS AND CODES: The architecture and interior design shall conform to APPLICABLE CRITERIA.

5.4.2. GENERAL: Overall architectural goal is to provide a functional, quality, meet expected usable life standards, and visually appealing facility that is a source of pride for the installation and delivered within the available budget and schedule.

5.4.3. MATERIALS AND RESOURCES: Meet ASHRAE Standard 189.1, Section 9.3, Mandatory Provisions, and either Section 9.4, Prescriptive Option, or Section 9.5, Performance Option.

5.4.3.1. Construction and Demolition (C&D) Waste Management: Meet the requirements of ASHRAE Standard 189.1, Section 9.3.1. A waste management plan and waste diversion reports are required, as detailed in Section 01 57 20.00 10, ENVIRONMENTAL PROTECTION.

5.4.4. COMPUTATION OF AREAS: See APPENDIX Q of this RFP for how to compute gross and net areas of the facility(ies).

5.4.5. BUILDING EXTERIOR: Design buildings to enhance or compliment the visual environment of the Installation and reflect a human scale to the facility. Building entrance should be architecturally defined and easily seen. Exterior materials, roof forms, and detailing shall be compatible with the surrounding development and adjacent buildings on the Installation and follow locally established architectural themes. Use durable materials that are easy to maintain. Exterior materials colors shall conform to the Installation requirements and if brick or stone, have color that is throughout the material. See Paragraph 6 for project specific requirements.

5.4.5.1. Building Numbers: Permanently attach exterior signage on two faces of each building indicating the assigned building number or address. Building number signage details and locations shall conform to Appendix H, Exterior Signage of this RFP.

5.4.5.2. Roofs and Exterior Walls: Meet the requirements of ASHRAE Standard 189.1, Section 5.3, Mandatory Provisions, and Section 5.4, Prescriptive Option, or Section 5.5, Performance Option. In addition, if a green roof is considered for this project, meet the requirements of ASHRAE Standard 6.2, Mandatory Provisions, and Section 6.3, Prescriptive Option, or Section 6.4, Performance Option.

5.4.6. BUILDING INTERIOR

5.4.6.1. Daylighting and Low Emitting Materials: Meet the requirements of ASHRAE Standard 189.1, Section 8.3, Mandatory Provisions, and either Section 8.4, Prescriptive Option, or 8.5, Performance Option. In addition, meet the daylighting requirements of ASHRAE Standard 189.1, Section 7.3, Mandatory Provisions, and either Section 7.4, Prescriptive Option, or Section 7.5, Prescriptive Option.

5.4.6.2. Surfaces and Color:

(a) Surfaces: Appearance retention is the top priority for building and furniture related finishes. Provide low maintenance, easily cleaned room finishes that are commercially standard for the facility occupancy specified, unless noted otherwise. In daylit zones, meet the requirements of ASHRAE Standard 189.1 section 8.4.1.

(b) Color: The color, texture and pattern selections for the finishes of the building shall provide an aesthetically pleasing, comfortable, easily maintainable and functional environment for the occupants. Coordinate the building colors and finishes for a cohesive design. Select colors appropriate for the building type. Use color, texture and pattern to path or way find through the building. Trendy colors that will become dated shall be limited to non-permanent finishes such as carpet and paint. Select finishes with regards to aesthetics, maintenance, durability, life safety and image. Limit the number of similar colors for each material. Use medium range colors for ceramic and porcelain tile grout help hide soiling. Plastic laminate and solid surface materials shall have patterns that are mottled, flecked or speckled. Coordinate finish colors of fire extinguisher cabinets, receptacle bodies and plates, fire alarms / warning lights, emergency lighting, and other miscellaneous items with the building interior. Match color of equipment items on ceilings (speakers, smoke detectors, grills, etc.) to the ceiling color.

5.4.6.3. Builidng Entrance: Meet the requirements of ASHRAE Standard189.1, Section 8.3.1.5.

5.4.6.4. Signage: Provide interior signage for overall way finding and life safety requirements. A comprehensive interior plan shall be from one manufacturer. Include the following sign types: (1) Lobby Directory, (2) Directional Signs; (3) Room Identification Signs; (4) Building Service Signs; (5) Regulatory Signs; (6) Official and Unofficial Signs (7) Visual Communication Boards (8) NO SMOKING signage that conveys building smoking policy. Use of emblems or logos may also be incorporated into the signage plan.

5.4.7. COMPREHENSIVE INTERIOR DESIGN

5.4.7.1. SID and FF&E: Comprehensive Interior Design includes the integration of a Structural Interior Design (SID) and a Furniture, Fixtures and Equipment (FF&E) design and package. SID requires the

design, selection and coordination of interior finish materials that are integral to or attached to the building structure. Completion of a SID involves the selection and specification of applied finishes for the building's interior features including, but not limited to, walls, floors, ceilings, trims, doors, windows, window treatments, built-in furnishings and installed equipment, lighting, and signage. The SID package includes finish schedules, finish samples and any supporting interior elevations, details or plans necessary to communicate the building finish design and build out. The SID also provides basic space planning for the anticipated FF&E requirements in conjunction with the functional layout of the building and design issues such as life safety, privacy, acoustics, lighting, ventilation, and accessibility. See Section 01 33 16 for SID design procedures.

5.4.7.2. FF&E Package: The FF&E design and package includes the design, selection, color coordination and of the required furnishing items necessary to meet the functional, operational, sustainability, and aesthetic needs of the facility coordinated with the interior finish materials in the SID. The FF&E package includes the specification, procurement documentation, placement plans, ordering and finish information on all freestanding furnishings and accessories, and a cost estimate. Coordinate the selection of furniture style, function and configuration with the defined requirements. Examples of FF&E items include, but are not limited to workstations, seating, files, tables, beds, wardrobes, draperies and accessories as well as marker boards, tack boards, and presentation screens. Criteria for furniture selection include function and ergonomics, maintenance, durability, sustainability, comfort and cost. See Section 01 33 16 for FFE design procedures.

5.5. STRUCTURAL DESIGN

5.5.1. STANDARDS AND CODES: The structural design shall conform to APPLICABLE CRITERIA.

5.5.2. GENERAL: The structural system must be compatible with the intended functions and components that allows for future flexibility and reconfigurations of the interior space. Do not locate columns, for instance, in rooms requiring visibility, circulation or open space, including, but not limited to entries, hallways, common areas, classrooms, etc. Select an economical structural system based upon facility size, projected load requirements and local availability of materials and labor. Base the structural design on accurate, site specific geotechnical information and anticipated loads for the building types and geographical location. Consider climate conditions, high humidity, industrial atmosphere, saltwater exposure, or other adverse conditions when selecting the type of cement and admixtures used in concrete, the concrete cover on reinforcing steel, the coatings on structural members, expansion joints, the level of corrosion protection, and the structural systems. Analyze, design and detail each building as a complete structural system. Design structural elements to preclude damage to finishes, partitions and other frangible, non-structural elements to prevent impaired operability of moveable components; and to prevent cladding leakage and roof ponding. Limit deflections of structural members to the allowable of the applicable material standard, e.g., ACI, AISC, Brick Industry Association, etc. When modular units or other pre-fabricated construction is used or combined with stick-built construction, fully coordinate and integrate the overall structural design between the two different or interfacing construction types. If the state that the project is located in requires separate, specific licensing for structural engineers (for instance, such as in Florida, California and others), then the structural engineer designer of record must be registered in that state.

5.5.3. LOADS: See Paragraph 3 for facility specific (if applicable) and Paragraph 6 for site and project specific structural loading criteria. Unless otherwise specified in paragraph 6, use Exposure Category C for wind. If not specified, use Category C unless the Designer of Record can satisfactorily justify another Exposure Category in its design analysis based on the facility Master Plan. Submit such exceptions for approval as early as possible and prior to the Interim Design Submittal in Section "Design After Award". Design the ancillary building items, e.g. doors, window jambs and connections, overhead architectural features, systems and equipment bracing, ducting, piping, etc. for gravity, seismic, lateral loads and for the requirements of UFC 4-010-01, DOD Minimum Antiterrorism Standards for Buildings. Ensure and document that the design of glazed items includes, but is not limited to, the following items under the design loads prescribed in UFC 4-010-01:

(a) Supporting members of glazed elements, e.g. window jamb, sill, header

(b) Connections of glazed element to supporting members, e.g. window to header

(c) Connections of supporting members to each other, e.g. header to jamb

(d) Connections of supporting members to structural system, e.g. jamb to foundation.

5.5.4. TERMITE TREATMENT AND GREEN CLEANING: (Except Alaska) Provide termite prevention treatment in accordance with Installation and local building code requirements, using licensed chemicals and licensed applicator firm. In all States, meet the requirements of ASHRAE Standard 189.1, Section 10.3.2, regarding the building Green Cleaning Plan.

5.6. THERMAL PERFORMANCE

5.6.1. STANDARDS AND CODES: Building construction and thermal insulation for mechanical systems shall conform to APPLICABLE CRITERIA.

5.6.2. BUILDING ENVELOPE SEALING PERFORMANCE REQUIREMENT: Design and construct the building envelope for office buildings, office portions of mixed office and open space (e.g., company operations facilities), dining, barracks and instructional/training facilities with a continuous air barrier to control air leakage into, or out of, the conditioned space that shall meet the requirements of ASHRAE Standard 189.1, Section 7.3, Mandatory Provisions, and either Section 7.4, Prescriptive Option, or 7.5, Performance Option. In addition, meet the requirements of ASHRAE Standard 189.1, Sections 10.3.1.4, 10.3.1.5, 10.3.1.6, and 10.3.2 as well as UFC 3-101-0, Section 3-6. Clearly identify all air barrier components of each envelope assembly on construction documents and detail the joints, interconnections and penetrations of the air barrier components. Clearly identify the boundary limits of the building air barriers, and of the zone or zones to be tested for building air tightness on the drawings. The use of painted interior walls is not an acceptable air barrier method.

5.6.2.1. Air Barrier: The air barrier must be durable to last the anticipated service life of the assembly. Provide a motorized damper in the closed position and connected to the fire alarm system to open on call and fail in the open position for any fixed open louvers at elevator shafts. Coordinate the motorized elevator hoistway vent damper(s) with the Fire Protection System design in Paragraph 5.10. Ensure that the damper(s) is accessible to facilitate regular inspection and maintenance.

5.6.2.2. Thermal Bridge. A Thermal Bridge (or cold bridge) occurs when a thermally conductive material (such as a metal stud, steel frame or concrete beam, slab or column) penetrates or bypasses the exterior insulation system. Design the building envelope to align all insulating elements, ie, the continuous wall insulation, insulated glazing, insulated doors from top of footing to bottom of roof deck. Wrap insulation around roof overhangs. Disconnect window and door sills from interior construction. Utilize thermally broken window and door frames. Provide details to eliminate thermal bridges particularly at floor slabs, roof/wall intersections, steel lintels and relief angles, metal through-wall flashings and at building corners.

5.6.2.3. Damper and Control: Close all ventilation or make-up air intakes and exhausts, , etc., when leakage can occur during inactive periods. Atrium smoke exhaust and intakes shall only open when activated per IBC and other applicable Fire Code requirements.

5.6.2.4. Garages: Compartmentalize garages under buildings by providing air-tight vestibules at building access points.

5.6.2.5. Spaces Under Negative Pressure: Compartmentalize spaces under negative pressure such as boiler rooms and provide make-up air for combustion.

5.6.2.6. TESTING, ADJUSTING AND BALANCING: Test and balance air and hydronic systems, using a firm certified for testing and balancing by the Associated Air Balance Council (AABC), National Environmental Balancing Bureau (NEBB), or the Testing Adjusting, and Balancing Bureau (TABB). The

prime contractor shall hire the TAB firm directly, not through a subcontractor. Perform TAB in accordance with the requirements of the standard under which the TAB Firm's qualifications are approved, i.e., AABC MN-1, NEBB TABES, or SMACNA HVACTAB unless otherwise specified herein. All recommendations and suggested practices contained in the TAB Standard shall be considered mandatory. Use the provisions of the TAB Standard, including checklists, report forms, etc., as nearly as practicable to satisfy the Contract requirements. Use the TAB Standard for all aspects of TAB, including qualifications for the TAB Firm and Specialist and calibration of TAB instruments. Where the instrument manufacturer calibration recommendations are more stringent than those listed in the TAB Standard, adhere to the manufacturer's recommendations. All quality assurance provisions of the TAB Standard such as performance guarantees shall be part of this contract. For systems or system components not covered in the TAB Standard, the TAB Specialist shall develop TAB procedures. Where new procedures, requirements, etc., applicable to the Contract requirements have been published or adopted by the body responsible for the TAB Standard used (AABC, NEBB, or TABB), the requirements and recommendations contained in these procedures and requirements are mandatory.

5.6.2.7. Performance Criteria and Substantiation: Test the completed building for air tightness in accordance with UFC 3-101-0, Section 3-6.3. Submit the qualifications and experience of the testing entity for approval. Demonstrate performance of the continuous air barrier for the opaque building envelope by the following tests:

(a) Air Barrier Quality Control Plan: Develop an Air Barrier Quality Control plan to assure that a competent air barrier inspector/specialist inspects the critical components prior to them being concealed. At a minimum, three onsite inspections are required during construction to assure the completeness of the construction and design.

(b) Notification of Testing: Notify the Government at least three working days prior to the tests to provide the Government the opportunity to witness the tests. Provide the Government written test results confirming the results of all tests.

5.7. PLUMBING AND WATER CONSUMING EQUIPMENT

5.7.1. STANDARDS AND CODES: The plumbing system and water consuming equipment shall conform to APPLICABLE CRITERIA and ASHRAE Standard 189.1, Section 6.3, Mandatory Provisions, and either Section 6.4, Prescriptive Option, or Section 6.5, Performance Option. In addition, meet the requirements of ASHRAE Standard 189.1, Section 10.3.2.

5.7.2. PRECAUTIONS FOR EXPANSIVE SOILS: Where expansive soils are present, include design features for underslab piping systems and underground piping serving chillers, cooling towers, etc, to control forces resulting from soil heave. Some possible solutions include, but are not necessarily limited to, features such as flexible expansion joints, slip joints, horizontal offsets with ball joints, or multiple bell and spigot gasketed fittings. For structurally supported slabs, suspend piping from the structure with adequate space provided below the pipe for the anticipated soil movement.

5.7.3. HOT WATER SYSTEMS: For hot water heating and supply systems, meet the requirements in UFC 3-420-01 and amendments, and the service water heating requirements of ASHRAE 189.1, Section 7.4.4.

5.7.4. SIZING HOT WATER SYSTEMS: Unless otherwise specified or directed in Paragraph 3, design in accordance with ASHRAE Handbook HVAC Applications, Chapter 49, “Service Water Heating,” UFC 3-420-01 and amendments, and ASHRAE 189.1, Section 7.4.3. Size and place equipment so that it is easily accessible and removable for repair or replacement.

5.7.5. JANITOR CLOSETS: In janitor spaces/room/closets, provide at minimum, a service sink with heavy duty shelf and wall hung mop and broom rack(s).

5.7.6. FLOOR DRAINS: As a minimum, provide floor drains in mechanical rooms and areas, janitor spaces/rooms/closets and any other area that requires drainage from fixtures or equipment, drain downs, condensate, as necessary.

5.7.7. WATER EFFICIENT PLUMBING FIXTURES: Indoor plumbing fixture equipment shall comply with the following criteria: ASHRAE 189.1, Section 6.3, Mandatory Provisions, and either Section 6.4, Prescriptive Option, or Section 6.5, Performance Option.

5.7.7.1. Water Closets (Toilets): ASHRAE 189.1, Sections 6.3.2.1.a and b. requirements for water closets (toilets) shall be as follows: Flushometer valve type: For single flush, maximum flush volume shall be determined in accordance with ASME A112.19.2/CSA B45.1 and shall be 1.28 gal (4.8 L). For dual-flush, the effective flush volume shall be determined in accordance with ASME A112.19.14 and shall be 1.28 gal (4.8 L). Water closets (toilets)—tank-type: Tank-type water closets shall be certified to the performance criteria of the U.S. EPA WaterSense Tank-Type High-Efficiency Toilet Specification and shall have a maximum flush volume of 1.28 gal (4.8 L).

5.7.7.2. URINALS: As required by ASHRAE 189.1, Section 6.3.2.1.c, maximum flush volume when determined in accordance with ASME A112.19.2/CSA B45.1 shall be 0.5 gal (1.9 L). Non-water urinals shall comply with ASME A112.19.19 (vitreous china) or IAPMO Z124.9 (plastic) as appropriate.

5.7.7.3. PUBLIC LAVATORY FAUCETS: Lavatory faucets in a public setting shall have a maximum flow rate of 0.5 gallons per minute and be in accordance with ASME A112.18.1/CSA B125.1.

5.7.7.4. PUBLIC METERING SELF-CLOSING FAUCETS: Faucets in a public setting that supply a specific amount of water over a given period shall have a maximum water use of 0.25 gallons per cycle and be in accordance with ASME A112.18.1/CSA B125.1.

5.7.7.5. PRIVATE LAVATORY FAUCETS: Faucets in a private setting such as barracks, family housing, or hospitals shall have a maximum flow rate of 1.5 gallons per minute and be in accordance with ASME A112.18.1/CSA B125.1 and shall comply with the performance requirements of the US EPA WaterSense High-Efficiency Lavatory Faucet Specification.

5.7.7.6. KITCHEN FAUCETS: Kitchen faucets shall have a maximum flow rate of 2.2 gallons per minute and be in accordance with ASME A112.18.1/CSA B125.1.

5.7.7.7. Cooling Towers: In addition to the requirements of Subsection 5.7.1. above, conduct a one-time potable water analysis, measuring at least the following control parameters, in ppm or mg/l: calcium (Ca); total alkalinity; silica (Si); chloride (Cl); and conductivity . Calculate the number of cooling tower cycles by dividing the amount of each parameter in the condenser water by the amount in the potable makeup water. The maximum acceptable levels of the parameters in the condenser water are: Ca (as $CaCO_3$) and Total alkalinity – 1000 ppm; SiO_2 –100 ppm; Cl – 250 ppm; Conductivity – 3500 µS/ml. Limit cooling tower cycles to avoid exceeding maximum values for any of these parameters. AND Complete the following: A system to monitor and control microbiological growth is recommended; Meter the potable makeup water to the cooling tower and blowdown from the cooling; Blowdown must be controlled with a conductivity meter; Report monthly results of the amount of potable water used, microbiological levels, blowdown, and corrosion; On cooling towers, install drift eliminators that achieve minimum efficiencies of 0.2% for counter-flow systems or 0.5% for cross-flow systems.

5.7.7.8. Drainage Systems: Do not use engineered vent or Sovent® type drainage systems.

5.7.7.9. Pipe Location and Insulation: Where the seasonal design temperature of the cold water entering a building is below the seasonal design dew point of the indoor ambient air insulate plumbing piping with a vapor barrier type of insulation to prevent condensation. Do not locate water or drainage piping over electrical wiring or equipment unless adequate protection against water (including condensation) damage

is provided. Insulation alone is not adequate protection against condensation. Meet pipe insulation requirements of ASHRAE 189.1, Section 7.4.3.11 and Table C-11 of Normative Appendix C.

5.7.7.10. Pipe Protection During Construction: Cover all drain, waste and vent piping to prevent mortar or other debris during such construction activities.

5.8. ELECTRICAL AND TELECOMMUNICATIONS SYSTEMS

5.8.1. STANDARDS AND CODES: The electrical systems for all facilities shall conform to APPLICABLE CRITERIA.

5.8.2. MATERIALS AND EQUIPMENT: Materials, equipment and devices shall, as a minimum, meet the requirements of Underwriters Laboratories (UL) where UL standards are established for those items. Wiring for branch circuits shall be copper. Motors larger than one-half horsepower shall be three phase. All electrical systems shall be pre-wired and fully operational unless otherwise indicated. Wall mounted electrical devices (power receptacles, communication outlets and CATV outlets) shall have matching colors, mounting heights and faceplates.

5.8.3. POWER SERVICE: Primary service from the base electrical distribution system to the pad-mounted transformer and secondary service from the transformer to the building service electrical equipment room shall be underground. See paragraph 6 for additional site electrical requirements.

5.8.3.1. Space Capacity: Provide 10% space for future circuit breakers in all panelboards serving residential areas of buildings and 15% spaces in all other panelboards.

5.8.4. TELECOMMUNICATION SERVICE: Connect the project's facilities to the Installation telecommunications (voice and data) system through the outside plant (OSP) telecommunications underground infrastructure cabling system per the I3A Criteria. Connect to the OSP cabling system from each facility main cross connect located in the telecommunications room.

5.8.5. LIGHTING: Comply with the recommendations of the Illumination Engineering Society (IES) and requirements of EPAct-2005 and Federal Energy Management Program (FEMP) for lighting products.

5.8.5.1. Interior Lighting:

(a) Reflective Surfaces: Coordinate daylighting requirements and interior architectural space surfaces and colors with the lighting systems to provide the most energy-efficient workable combinations.

(1) Fluorescent Lighting: Fluorescent lighting systems shall utilize NEMA premium electronic ballasts and high performance fluorescent lamps with a Correlated Color Temperature (CCT) of 4100 Kelvin (K) to 5000 K. Linear fluorescent and compact fluorescent lamps shall have a Color Rendering Index (CRI) of ≥ 82. All fluorescent lamps (compact and linear) shall be reclaimed through a process that captures and properly disposes of or recycles the mercury content. Do not use surface mounted luminaires on acoustical tile ceilings. Provide outside each building emergency egress door an un-switched emergency egress luminaire controlled by photocell or astronomical time clock. All other emergency egress luminaires shall be controlled the same as non-emergency luminaires in a shared space during normal (non-emergency) operation.

(2) Solid-State Lighting: Fixtures shall have a lumen maintenance life expectancy (L_{70}) of ≥ 36,000 hours, a CRI of ≥ 82, and a CCT of 4100 K to 5000 K. Each solid-state fixture model shall be tested in accordance with IES LM-79. Test reports shall verify the fixture performance (lumen output, lumen maintenance, power consumption, efficacy and color) meets or exceeds the fixture manufactures published data. Laboratory testing shall be completed by a National Voluntary Laboratory Accreditation Program laboratory. Provide a five year warranty for fixtures.

(3) Light Level Tuning: Light level tuning is a closed-loop feedback system that measures the illumination level in a space and dims the luminaires when the measured level exceeds the target level,

thereby saving the energy that otherwise would be used to compensate for future light depreciation. Provide a life-cycle cost-benefit analysis (LCCA) of light level tuning for all spaces where the general lighting luminaires are equipped with dimming ballasts or LED drivers. The LCCA shall follow the methodology contained in 10 CFR 436. Provide light level tuning where the LCCA shows it to be life cycle cost effective.

(4) Lighting Systems and Controls: Lighting systems (including lighting controls, daylighting controls, and lighting power density limits) shall comply with the requirements of Section 7.4.6 of ASHRAE Standard 189.1 and Section 9 of ANSI/ASHRAE/IES 90.1-2007. Lighting designs shall follow the recommended practices of the IES and shall target the recommended illumination levels of the IES.

(5) Occupancy or Vacancy Sensors: Use occupancy or vacancy sensors to automatically turn off lighting a specified time after all occupants leave the space. The off time shall be user adjustable to 5, 15, or 30 minutes. Selection of the sensor type (single or dual technology, wired or wireless) shall be based on the space configuration, user functionality and life-cycle cost-benefit analysis. Single technology solutions shall incorporate signal processing technology that distinguishes between background noise and actual motion without automatically changing their sensitivity.

(6) Automated Shading: Automated shading shall be considered in spaces utilizing daylight harvesting to maximize the energy savings of the daylighting system. The shades shall be controlled to reduce glare and unwanted heat gain while still allowing natural light to enter the space. When utilizing automated shading consider the following :

i. For ease of use and space aesthetics, incorporate the automated shades with the lighting control system.

ii. For maximum energy savings the automated shading system shall predictably position the shades based on a combination of time of day, façade direction, and sky conditions.

iii. For maximum design flexibility and ease of installation, shade system should have the capability to address and control each shade individually.

iv. The shading system shall have a manual override that allows the occupant to temporarily adjust the shades to any desired position. The system shall revert back to automatic control after a specified period of time.

(b) Provide a life-cycle cost-benefit analysis (LCCA) of automated shading for all spaces where daylight harvesting is provided. The LCCA shall follow the methodology contained in 10 CFR 436. Provide automated shading where the LCCA shows it to be economical.

(1) Scene-Based Dimming: Use scene based dimming in multiple-use areas including auditoriums, conference rooms and classrooms. Also provide scene based dimming in dining rooms and gymnasiums with multiple functions. One button preset touch recall shall allow multiple zones of light within a space to go to the appropriate light levels, known as a scene, for a specific task or use. Scene based control shall allow the integration of AV controls, shading/projection screens and lighting to work seamlessly with one button preset touch (i.e. lights dim, projection screen lowers, and shades go down).

(2) Personal Lighting Control: Personal lighting controls exceeding ASHRAE requirements shall be considered. Personal lighting controls allow users to vary the general light level based on the task at hand. Personal control can be achieved by wall mounted controls (hard wired or wireless), Infrared or Radio Frequency (RF) wireless devices, or via computer. Digital addressable ballasts and light emitting diode (LED) drivers allow the control flexibility of personal dimming of installed lighting on the occupant's work area (i.e. dim the luminaire over their cubicle to the appropriate light level).

(3) Wireless and Plug-and-Play Controls: Wireless and plug-and-play lighting controls shall be considered for all installations where flexibility is paramount. To avoid interference, wireless products shall communicate in an FCC frequency band that does not allow continuous transmissions.

(4) Testing Agent: An independent agent with no less than three years experience in testing of complex lighting control systems shall be hired to conduct and certify functional testing of lighting control devices and control systems. The testing agent shall not be directly involved in either the design or construction of the project and shall certify the installed lighting controls meet or exceed all requirements

of ASHRAE Standard 189.1, ANSI/ASHRAE/IES Standard 90.1-2007, and all documented performance criteria. The lighting control manufacturer's authorized technical representative may serve as the testing agent. Submit qualifications of the testing agent for approval.

(5) Manufacturer Support: shall include technical phone support located in the United States. The technical phone support shall be available 24 hours a day, 365 days a year.

5.8.5.2. Exterior Lighting Requirements: These requirements apply to exterior lighting illuminating any building, site, property, structure, gate, sign, roadway, parking lot, pathway, sidewalk, landscape, structure, etc. that is owned, operated by, or constructed to be leased to the Department of the Army. This includes all Sustainment, Restoration, and Modernization (SRM) and Military Construction activities within the United States, its territories, and overseas on permanent Active Army installations, Army Reserve Centers, Army National Guard Readiness Facilities, and Armed Forces Reserve Centers, regardless of funds source. See Paragraph 6.9 for site specific information, if any, on exterior lighting systems.

(a) General: Exterior lighting technology should be selected based on a balance of energy performance and quality of light, while remaining life-cycle cost effective and environmentally responsible. Exterior lighting systems or luminaires selected for use should have demonstrated adherence to quality standards by being recognized by the DesignLights Consortium (reference e), the ENERGY STAR Program, the FEMP or other third-party qualifier appropriate to the technology. Manufacturers should also stand behind their products by providing a Luminaire warranty for at least five years or more. Design teams should carefully consider the occupancy and purpose of the lighting requirements and incorporate energy-saving controls, sensors, and the use of bi-level fixtures to provide exterior lighting levels only as appropriate and only during the hours of night needed. Other energy-saving and lighting quality design considerations include ensuring better uniformity of lighting distribution to required levels to reduce over-lighted hotspots and control light trespass outside the area of intended coverage.

(b) Exterior Lighting Performance by Application: Exterior lighting systems should meet, at a minimum, the better of the standards below in Table 1 or the DLC Product Qualification Criteria (reference e) or current ENERGY STAR qualification or FEMP designation requirements.

(c) General Exterior Lighting: Typically lighting to provide visibility for security and people moving along established circulation pathways through an illuminated area to or from a destination. Examples include roadways, parking lots, parking structures, sidewalks, tarmacs, service areas, and secondary exits from buildings.

(d) Architectural Lighting: Lighting in use where exterior spaces are occupied at night for a functional purpose, such as plazas, gas stations, pavilions, or amphitheaters. Also, for use where a higher quality of light is desired, such as building entrances, wall-wash luminaires, illumination of architectural or landscaping features, sculpture, displays, exhibits, flags, gates, primary signage, etc.

(e) Exceptions: Where a non-white light color is specifically desired by aesthetic design or a color-specific functional requirement (e.g. water feature lighting, entertainment, signal lights, airfield lights, marine wildlife protection, etc.), the CRI and CCT range values indicated may not apply. Specialized lighting, such as lighting for monitoring systems designed to use non-visible spectrum light, are also exempt from the minimum CRI and CCT standards as well. Luminaires primarily powered by on-site renewable energy (e.g. solar and/or wind) are also exempt from the requirements herein.

Table 1 – Minimum Exterior Lighting Performance by Application. These values represent minimum standards and do not supersede higher standards that may also be applicable or specified by design.

Application	Luminaire Efficacy	CRI	Nominal CCT Ranges	Lamp Life
General Exterior Lighting	65	65	3000-5700	50,000

Architectural Lighting	50	75	3500-5000	50,000

Units:

Luminaire Efficacy (with complete fixture load including ballast/driver loads) is in lumens per watt
CRI (Color Rendering Index) is a value without units
CCT (Correlated Color Temperature) Range is in Kelvin Temperature
Minimum Lamp Life is in Rated Hours per TM-21

(f) Life-Cycle Cost Analysis (LCCA) and Renewable Energy Opportunities. On-site renewable or alternative energy power system cost over a 25-year life-cycle should be compared to the cost of the conventional grid-connection infrastructure, operation and maintenance costs thereof, proper time-of-use grid energy cost with line losses and price escalation. Renewable or alternative energy systems should be used wherever the payback period less than or equal to the life cycle period. Design team selections and Value Engineering evaluations are to prioritize a reduced total cost of ownership during the full life-cycle period over the first costs of design and construction. The LCCA shall follow the methodology contained in 10 CFR 436.

(g) Sustainability and Environmental Impact Reduction. To meet the mercury-use reduction intent of EISA 2007 (Reference c) and other sustainability goals, lighting systems should not contain added mercury in excess of 5mg per lamp or 80 picograms per Lumen Hour. Whenever two or more viable lighting technologies are substantially equal in life-cycle cost and performance, preference should be given to the technology with the lowest mercury content per Lumen Hour.

5.8.6. TELECOMMUNICATION SYSTEM: Building telecommunications cabling systems (BCS) and OSP telecommunications cabling system shall conform to APPLICABLE CRITERIA, including but not limited to I3A Technical Criteria. An acceptable BCS encompasses, but is not limited to, copper and fiber optic (FO) entrance cable, termination equipment, copper and fiber backbone cable, copper and fiber horizontal distribution cable, workstation outlets, racks, cable management, patch panels, cable tray, cable ladder, conduits, grounding, and labeling. Items included under OSP infrastructure encompass, but are not limited to, manhole and duct infrastructure, copper cable, fiber optic cable, cross connects, terminations, cable vaults, and copper and FO entrance cable.

5.8.6.1. Testing: Design, install, label and test all telecommunications systems in accordance with the I3A Criteria and ANSI/TIA/EIA 568, 569, and 606 standards. A Building Industry Consulting Services International (BICSI) Registered Communications Distribution Designer (RCDD) with at least 2 yrs related experience shall develop and stamp telecommunications design, and prepare the test plan. See Paragraph 5.9.2.5 for design of environmental systems for Telecommunications Rooms.

5.8.6.2. Installation: The installers assigned to the installation of the telecommunications system or any of its components shall be regularly and professionally engaged in the business of the application, installation and testing of the specified telecommunications systems and equipment. Key personnel; i.e., supervisors and lead installers assigned to the installation of this system or any of its components shall be BICSI Registered Cabling Installers, Technician Level. Submit documentation of current BICSI certification for each of the key personnel. In lieu of BICSI certification, supervisors and installers shall have a minimum of 5 years experience in the installation of the specified copper and fiber optic cable and components. They shall have factory or factory approved certification from each equipment manufacturer indicating that they are qualified to install and test the provided products.

5.8.6.3. End to End Test: Perform a comprehensive end to end test of all circuits to include all copper and fiber optic cables upon completion of the BCS and prior to acceptance of the facility. Provide adequate advanced notification to the COR to allow COR and Installation personnel attendance The BCS circuits include but are not limited to all copper and fiber optic(FO) entrance cables, termination equipment, copper and fiber backbone cable, copper and fiber horizontal distribution cable, and workstation outlets. Test in accordance with ANSI/EIA/TIA 568 standards. Use test instrumentation that meets or exceeds the

standard. Submit the official test report to include test procedures, parameters tested, values, discrepancies and corrective actions in electronic format. Test and accomplish all necessary corrective actions to ensure that the government receives a fully operational, standards based, code compliant telecommunications system.

5.8.7. LIGHTNING PROTECTION SYSTEM: Provide a lightning protection system where recommended by the Lightning Risk Assessment of NFPA 780, Annex L.

5.9. HEATING, VENTILATING, AND AIR CONDITIONING

5.9.1. STANDARDS AND CODES: The HVAC system shall conform to APPLICABLE CRITERIA.

5.9.2. DESIGN CONDITIONS:

5.9.2.1. Outdoor and Indoor Calculations and Requirements: Indoor design conditions and load calculations shall be in accordance with UFC 3-410-01FA. Outdoor air and exhaust ventilation requirements for indoor air quality shall be in accordance with ASHRAE 62.1-2007. Outdoor design conditions are in UFC 3-410-01FA except that weather data is specified in paragraph 6, rather than at the URL (web link) listed in the UFC.

5.9.2.2. Indoor Air Quality: Buildings indoor air quality sytems, thermal comfort, acoustical control, equipment, calculation procedures, construction and start-up shall comply with ASHRAE Standard 189.1, Section 8.3, Mandatory Provisions, and Section 8.4, Prescriptive Option, and either Section 8.5, Performance Option unless otherwise specified in this subsection.

5.9.2.3. Outdoor Air Delivery Monitoring: Spaces Ventilated by Mechanical Systems. Reference Sections 7.4.3.2, 8.3.1.2.1, and 10.3.2, of ASHRAE Standard 189.1. A densely occupied space is defined as those spaces with a design occupant density greater than or equal to 25 people per 1000 ft^2 ($100m^2$).

5.9.2.4. Environmental Tobacco Smoke: a. Smoking shall not be allowed inside the building. Signage stating such shall be posted within 10 ft (3 m) of each building entrance. b. Any exterior designated smoking areas shall be located a minimum of 50 ft (7.5 m) away from *building entrances*, *outdoor air* intakes, and operable windows. c. Section 6.2.9 of ANSI/ASHRAE Standard 62.1 shall not apply.

5.9.2.5. High Humidity Areas: Design HVAC systems in geographical areas meeting the definition for high humidity in UFC 3-410-01FA to comply with the special criteria therein for humid areas.

5.9.2.6. Controls Maintenance: Locate all equipment so that service, adjustment and replacement of controls or internal components are readily accessible for easy maintenance.

5.9.2.7. Environmental Requirements for Telecommunications Rooms and Telecommunications Equipment Rooms, (including SIPRNET ROOMS, where applicable for specific facility type): Comply with ANSI/EIA/TIA 569 (including applicable Addenda**)**. Maintain environmental conditions at the Class 1 and 2 Recommended Operating Environment. Before being introduced into the room, filter and pre-condition outside air to remove particles with the minimum MERV filtration quality shown in the ASHRAE HVAC Applications, Chapter 19. Maintain rooms under positive pressure relative to surrounding spaces. Design computer room air conditioning units specifically for telecommunications room applications. Build and test units in accordance with the requirements of ANSI/ASHRAE Standard 127. A complete air handling system shall provide ventilation, air filtration, cooling and dehumidification, humidification (as determined during the design phase), and heating. The system shall be independent of other facility HVAC systems and shall be required year round.

5.9.2.8. Fire dampers: dynamic type with a dynamic rating suitable for the maximum air velocity and pressure differential to which the damper is subjected. Test each fire damper with the air handling and distribution system running.

5.9.3 Utility Meters: Measurement devices with remote communication capability shall be provided to collect energy and water consumption data for each energy supply source and water supply source to each facility, including gas, water (potable, reclaimed and rainwater), electricity, and distributed energy that exceeds the thresholds listed in ASHRAE Standard 189.1. Meet the requirements of ASHRAE Standard 189.1, Sections 6.3.3, 7.3.3, 10.3.2 and AR 420-1, Chapter 22. For Government owned utilities, install meters with remote communication capability as well as have a continuous manual reading option. Water meters shall provide daily data and shall record hourly consumption. Gas and electric meters will also provide demand readings based on consumption over a maximum of any 15 minute period. Configure all meters to transmit to a meter data management system at least daily even if no receiver for the data is currently available at the time of project acceptance. For privatized utilities, coordinate with the privatization utility(ies) for the proper meter base and meter installation. Exception: Renovation or energy projects with programmed costs less than $200,000 shall incorporate lower-cost energy monitors when cost effective over the life-cycle of the building following the monitoring guidance as detailed in ASHRAE Standard 189.1 Section 7.3.3.

5.9.3.1 Data Storage and Retrieval. The meter data management system shall be capable of electronically storing water meter and sub-meter data and creating user reports showing calculated hourly, daily, monthly and annual water consumption for each meter and sub-meter and provide alarming notification capabilities as needed. In addition, verification of meter operation will be conducted at installation.

5.9.3.2 Evaporative Cooling Sub-metering: For buildings that use evaporative cooling, cooling tower(s), hot water makeup systems, or automatic landscape irrigation system(s), separate submeters shall be provided for each such application. Water use data shall be collected at each source (e.g. *potable water*, reclaimed water, rainwater) for any source that exceeds the thresholds of: Potable water- 3,800 L/day (1,000 gal/day); Municipally reclaimed water - 3,800 L/day (1,000 gal/day); and Alternate sources of water - 1,900 L/day (500 gal/day).

5.9.3.3 Water Sub-metering: Sub-metering shall also be provided to collect water use data for each of following building subsystems, if they are sized above the threshold levels: Cooling towers – Primary flow > 30 L/s (500 gpm); Evaportative Coolers – Makeup water > 0.04 L/s (0.6 gpm); Steam and hot water boilers - > 50 kW (500,000 Btu/h) input; Irrigated landscape area with controllers - > 2500 m2 (25,000 ft2); Any large water using process – Consumption > 3,800 L/day (1000 gal/day).

5.9.3.4 Outdoor Irrigation: Outdoor irrigation shall have smart controllers that will shut off when rainfall is sensed (ASHRAE Standard 189.1 paragraph 6.3.1.3 (2011 version)). Outdoor irrigation shall be used only to temporarily for plant establishment and shall be removed within a period not to exceed 18 months of installation.

5.9.3.5 Energy Metering: Meters with remote metering capability or automatic meter reading (AMR) capability shall be provided to collect energy use data for each supply energy source (e.g. gas, electricity, district steam) to the building that exceed thresholds of: Electrical service - > 200 kVA; On-site renewable electric power – All systems > 1 kVA (peak); Gas and steam service - >300 kW (1,000,000 Btu/h); Geothermal - >300 kW (1,000,000 Btu/h0 heating; Solar thermal - >10 kW (30,000 Btu/h). Utility company service entrance/interval meters are allowed to be used provided they are configured for automatic meter reading (AMR) capability. Sub-metering with remote metering capability shall be provided to collect energy use data for each subsystem component that meet the following thresholds: Chillers/heat pumps - >70 kW (240,000 Btu/h) cooling capacity; Packaged AC units - > 70 kW (240,000 Btu/h) cooling; Fans - > 15 kW (20 hp); Pumps - > 15 kW (20 hp); Cooling towers - > 15 kW (20 hp); Boilers and other heating equipment - >300 kW (1,000,000 Btu/h) input; General lighting circuits - > 100 kVA; Miscellaneous electric loads - > 100 kVA).

5.9.4 BUILDING AUTOMATION SYSTEM. Provide a Building Automation System consisting of a building control network , and integrate the building control network into the UMCS as specified.

The building control network shall be a single complete non-proprietary Direct Digital Control (DDC) system for control of the heating, ventilating and air conditioning (HVAC) systems as specified herein. The building control network shall be an Open implementation of LONWORKS® technology using ANSI/EIA 709.1B as the only communications protocol and use only LonMark Standard Network Variable Types (SNVTs), as defined in the LonMark® Resource Files, for communication between DDC Hardware devices to allow multi-vendor interoperability.

5.9.4.1 The building automation system shall be open in that it is designed and installed such that the Government or its agents are able to perform repair, replacement, upgrades, and expansions of the system without further dependence on the original Contractor. This includes, but is not limited to the following:

(a) Install hardware such that individual control equipment can be replaced by similar control equipment from other equipment manufacturers with no loss of system functionality.

(b) Necessary documentation (including rights to documentation and data), configuration information, configuration tools, programs, drivers, and other software shall be licensed to and otherwise remain with the Government such that the Government or its agents are able to perform repair, replacement, upgrades, and expansions of the system without subsequent or future dependence on the Contractor.

5.9.4.2 All DDC Hardware shall:

(a) Be connected to a TP/FT-10 ANSI/EIA 709.3 control network.

(b) Communicate over the control network via ANSI/EIA 709.1B exclusively.

(c) Communicate with other DDC hardware using only SNVTs

(d) Conform to the LonMark® Interoperability Guidelines.

(e) Be locally powered; link power (over the control network) is not acceptable.

(f) Be fully configurable via standard or user-defined configuration parameter types (SCPT or UCPT), standard network variable type (SNVT) network configuration inputs (*nci*), or hardware settings on the controller itself to support the application. All settings and parameters used by the application shall be configurable via standard or user-defined configuration parameter types (SCPT or UCPT), standard network variable type (SNVT) network configuration inputs (*nci*), or hardware settings on the controller itself

(g) Provide input and output SNVTs required to support monitoring and control (including but not limited to scheduling, alarming, trending and overrides) of the application. Required SNVTs include but are not limited to: SNVT outputs for all hardware I/O, SNVT outputs for all setpoints and SNVT inputs for override of setpoints.

(h) To the greatest extent practical, not rely on the control network to perform the application.

5.9.4.3 Controllers shall be Application Specific Controllers whenever an ASC suitable for the application exists. When an ASC suitable for the application does not exist use programmable controllers or multiple application specific controllers.

5.9.4.4 Application Specific Controllers shall be LonMark Certified whenever a LonMark Certified ASC suitable for the application exists. For example, VAV controllers must be LonMark certified.

5.9.4.5 Application Specific Controllers (ASCs) shall be configurable via an LNS plug-in whenever t an ASC with an LNS plug-in suitable for the application exists.

5.9.4.6 Each scheduled system shall accept a network variable of type SNVT_occupancy and shall use this network variable to determine the occupancy mode. If the system has not received a value to this network variable for more than 60 minutes it shall default to a configured occupancy schedule.

5.9.4.7 Gateways may be used provided that each gateway communicates with and performs protocol translation for control hardware controlling one and only one package unit.

5.9.4.8 Not Used

5.9.4.9 Perform all necessary actions needed to fully integrate the building control system. These actions include but are not limited to:

(a) Configure M&C Software functionality including: graphical pages for System Graphic Displays including overrides, alarm handling, scheduling, trends for critical values needing long-term or permanent monitoring via trends, and demand limiting.

(b) Install IP routers or ANSI/CEA-852 routers as needed to connect the building control network to the UMCS IP network. Routers shall be capable of configuration via DHCP and use of an ANSI/CEA-852 configuration server but shall not rely on these services for configuration. All communication between the UMCS and building networks shall be via the ANSI/CEA-709.1B protocol over the IP network in accordance with ANSI/CEA-852.

5.9.4.10 Provide the following to the Government for review prior to acceptance of the system:

(a) The latest version of all software and user manuals required to program, configure and operate the system.

(b) Points Schedule drawing that shows every DDC Hardware device. The Points Schedule shall contain the following information as a minimum:

(1) Device address and NodeID.

(2) Input and Output SNVTs including SNVT Name, Type and Description.

(3) Hardware I/O, including Type (AI, AO, BI, BO) and Description.

(4) Alarm information including alarm limits and SNVT information.

(5) Supervisory control information including SNVTs for trending and overrides.

(6) Configuration parameters (for devices without LNS plug-ins) Example Points Schedules are available at https://eko.usace.army.mil/fa/besc/

(c) Riser diagram of the network showing all network cabling and hardware. Label hardware with ANSI.CEA-709.1 addresses, IP addresses, and network names.

(d) Control System Schematic diagram and Sequence of Operation for each HVAC system.

(e) Operation and Maintenance Instructions including procedures for system start-up, operation and shut-down, a routine maintenance checklist, and a qualified service organization list.

(f) LONWORKS® Network Services (LNS®) database for the completed system.

(g) Quality Control (QC) checklist (below) completed by the Contractor's Chief Quality Control (QC) Representative

Table 5-1: QC Checklist

Instructions: Initial each item, sign and date verifying that the requirements have been met.		
#	Description	Initials
1	All DDC Hardware is installed on a TP/FT-10 local control bus.	
2	Communication between DDC Hardware is only via EIA 709.1B using SNVTs. Other protocols and network variables other than SNVTs have not been used.	
3	All sequences are performed using DDC Hardware.	
4	LNS Database is up-to-date and accurately represents the final installed system	
5	All software has been licensed to the Government	
6	M&C software monitoring displays have been created for all building systems, including all override and display points indicated on Points Schedule drawings.	
7	Final As-built Drawings accurately represent the final installed system.	
8	O&M Instructions have been completed and submitted.	
9	Connections between the UMCS IP network and ANSI/CEA-709.1B building networks are through ANSI/CEA-852 Routers.	
By signing below I verify that all requirements of the contract, including but not limited to the above, been met.		
Signature:_____ Date:_____		

5.9.4.11 Perform a Performance Verification Test (PVT) under Government supervision prior to system acceptance. During the PVT demonstrate that the system performs as specified, including but not limited to demonstrating that the system is Open and correctly performs the Sequences of Operation.

5.9.4.12 Provide a 1 year unconditional warranty on the installed system and on all service call work. The warranty shall include labor and material necessary to restore the equipment involved in the initial service call to a fully operable condition.

5.9.4.13 Provide training at the project site on the installed building system, including all commissioned systems and equipment (ASHRAE Standard 189.1, Section 10.3.1.2), . Upon completion of this training each student, using appropriate documentation, should be able to start the system, operate the system, recover the system after a failure, perform routine maintenance and describe the specific hardware, architecture and operation of the system.

5.10 ENERGY CONSERVATION

5.10.1 ENERGY EFFICIENCY: The building(s), including the envelope(s), HVAC systems, service water heating, power, and lighting systems, shall meet, at a minimum, the Mandatory Provisions in Section 7.3 and either the Prescriptive Option in Section 7.4 or the Performance Option in Section 7.5 of ASHRAE Standard 189.1. ASHRAE 189.1 is the minimum requirement that incorporates by reference the requirements of ASHRAE Standard 90.1-2007 and shall be used as the project baseline for life-cycle cost comparisons. A LCCA is not required on the baseline project. Substantiation requirements are defined in Section 01 33 16, Design After Award and ASHRAE Standard 189.1, Section 10.3.2. Exception 1: The on-site renewable energy systems included in ASHRAE Standard 189.1, Section 7.4.1.1 are not required.

5.10.1.1 Minimum Energy Consumption: The building, including the building envelope, HVAC systems, service water heating, power, lighting systems and process and plug loads shall achieve an energy consumption that is a minimum of 30% below the consumption of a baseline building meeting the minimum requirements of ANSI/ASHRAE/IESNA Standard 90.1-2007 and that is life cycle cost effective. Energy calculation methodologies and substantiation requirements are defined in Section 01 33 16, Design After Award. A LCCA is required.

5.10.1.2 EISA 2007 Requirement: Design the building to achieve the maximum possible fossil fuel-generated energy consumption reduction based on the requirements of EISA 2007 Section 433 that is life cycle cost effective. A LCCA is required.

5.10.1.3 LCCA: Where a LCCA is required, an incremental LCCA shall be completed for all energy efficiency or conservation features provided in excess of the baseline to ensure the payback period is no greater than the lesser of 40 years or the projected life of the facility. Equipment procurement, fuel, maintenance, repair, replacement, and any other quantifiable benefits and costs are to be included in the LCCA. The LCCA will be documented and made part of the design analysis. The LCCA shall follow the methodology contained in 10 CFR 436.

5.10.2 EnergyStar AND FEMP PRODUCTS: The heating, ventilation, and air conditioning shall comply with Section 6 of ANSI/ASHRAE/IESNA 90.1-2007 and Section 7.4.2.1.b of ASHRAE Standard 189.1, including the Normative Appendix C of ASHRAE Standard 189.1 with the following modification: Purchase Energy Star products, except use FEMP designated products where FEMP is applicable to the product type. The term “Energy Star” means a product that is rated for energy efficiency under an Energy Star program. The term “FEMP designated” means a product that is designated under the Federal Energy Management Program of the Department of Energy as being among the highest 25 percent of equivalent products for energy efficiency. For projects located OCONUS the products listed in ASHRAE Standard 189.1, Section 7.4.7, shall have an equipment efficiency that is equivalent or greater than the criteria required to achieve the ENERGY STAR label or meets or exceeds the equivalent of FEMP designated efficiency requirements.

5.10.3 SOLAR HOT WATER HEATING: Design and construct all new construction projects with an average daily non-industrial hot water requirement of 50 gallons or more, and located in an area shown on the NREL solar radiation maps (http://www.nrel.gov.gis.solar.html) as receiving an annual average of 4kWh/m2/day or more to provide a minimum of 30 percent of the facility’s hot water demand by solar water heating. Waste heat harvesting, integrated co-generation systems, or a combination thereof may be used in lieu of solar water heating where they achieve equivalent energy savings, as documented in the project’s design analysis and commissioning analysis.

5.10.4 WATER USED FOR HEATING AND COOLING: Meet the requirements of ASHRAE 189.1 Section 6.3.2.3 – HVAC Systems and Equipment and Section 6.4.2.1 – Cooling Towers. When potable water is used to improve a building’s energy efficiency, employ life-cycle cost effective water conservation measures per requirements of EPAct 2005 Section 109. This includes potable water used for both domestic and process purposes.

5.10.5 RENEWABLE ENERGY: See Paragraph 6, PROJECT SPECIFIC REQUIREMENTS for renewable energy requirements for this project.

5.10.6 FUNDAMENTAL REFRIGERANT MANAGEMENT: Meet the requirements of ASHRAE Standard 189.1, Section 9.3.3.

5.11 FIRE PROTECTION

5.11.2 STANDARDS AND CODES Provide the fire protection system conforming to APPLICABLE CRITERIA.

5.11.3 INSPECTION AND TESTING: Inspect and test all fire suppression equipment and systems, fire pumps, fire alarm and detection systems and mass notification systems in accordance with the applicable NFPA standards. The fire protection engineer of record shall witness final tests. The fire protection engineer of record shall certify that the equipment and systems are fully operational and meet the contract requirements. Two weeks prior to each final test, the contractor shall notify, in writing, the installation fire department and the installation public work representative of the test and invite them to witness the test.

5.11.4 FIRE EXTINGUISHER CABINETS: Provide fire extinguisher cabinets and locations for hanging portable fire extinguishers in accordance with NFPA 10 Standard for Portable Fire Extinguishers. The Government will furnish and install portable fire extinguishers, which are personal property, not real property installed equipment.

5.11.5 FIRE ALARM AND DETECTION SYSTEM: Required fire alarm and detection systems shall be the addressable type. Fire alarm initiating devices, such as smoke detectors, heat detectors and manual pull stations shall be addressable. When the system is in alarm condition, the system shall annunciate the type and location of each alarm initiating device. Sprinkler water flow alarms shall be zoned by building and by floor. Supervisory alarm initiating devices, such as valve supervisory switches, fire pump running alarm, low-air pressure on dry sprinkler system, etc. shall be zoned by type and by room location.

5.11.6 ROOF ACCESS: Paragraph 2-9 of UFC 3-600-01 Fire Protection for Facilities will be modified in the next update to that UFC. Pending revision, comply with roof access and stairway requirements in accordance with the International Building Code. Where roof access is required by the IBC or other criteria, comply with UFC 4-010-01, Anti-Terrorist Force Protection, Standard 14. "Roof Access".

5.11.7 FIRE PROTECTION ENGINEER QUALIFICATIONS: In accordance with UFC 3-600-01, FIRE PROTECTION ENGINEERING FOR FACILITIES**,** the fire protection engineer of record shall be a registered professional engineer (P.E.) who has passed the fire protection engineering written examination administered by the National Council of Examiners for Engineering and Surveys (NCEES), or a registered P.E. in a related engineering discipline with a minimum of 5 years experience, dedicated to fire protection engineering that can be verified with documentation.

5.12 SUSTAINABLE DESIGN

5.12.2 STANDARDS: Sustainable design shall conform to APPLICABLE CRITERIA. See Paragraph 6, PROJECT-SPECIFIC REQUIREMENTS for which version of LEED applies to this project, however, this project shall achieve a minimum of LEED Silver Certification by Green Building Certification Institute (GBCI). Each building must individually comply with the requirements of paragraphs ENERGY CONSERVATION and PLUMBING AND WATER CONSUMING EQUIPMENT. The project must earn the points associated with compliance with paragraph 5.10, ENERGY CONSERVATION,of this RFP.

5.12.3 In accordance with the National Defense Appropriations Acto fo 2012, Section 2830, the contractor will not be compensated for any expenses associated with the express intent to obtain LEED certification above the SILVER level. It is recognized that competitive best balue proposal details and requirements cited else where in this document and supporting documents may provide for features which allow for a certification higher than SILVER to be obtained. Whether to achieve a future marketing advantage or for toher purposes, the contractor may obtain LEED GOLD or PLATINUM certification(s) provided that achieving such certification imposes no additional cost to the government.

5.12.4 LEED INNOVATION AND DESIGN AND REGIONAL PRIORITY CREDITS: LEED Innovation and Design (ID) credits are acceptable only if they are supported by formal written approval by GBCI (either published in USGBC Innovation and Design Credit Catalog or accompanied by a formal ruling from GBCI). LEED ID and RP credits that require any Owner actions or commitments are acceptable only when Owner commitment is indicated in paragraph PROJECT-SPECIFIC REQUIREMENTS or Appendix LEED Project Credit Guidance.

5.12.5 DOCUMENTATION FOR CERTIFICATION: All LEED Prerequisite and Credit documentation shall be provided to GBCI and the Owner (if requested) in addition to any other documentation requirements Online documentation shall be uploaded to GBCI and updated at each phase of the project.

5.13 SECURITY (ANTI-TERRORISM STANDARDS): Unless otherwise specified in Project Specific Requirements, only the minimum protective measures as specified by the current Department of Defense

Minimum Antiterrorism Standards for Buildings, UFC 4-010-01, are required for this project. The element of those standards that has the most significant impact on project planning is providing protection against explosives effects. That protection can either be achieved using conventional construction (including specific window requirements) in conjunction with establishing relatively large standoff distances to parking, roadways, and installation perimeters or through building hardening, which will allow lesser standoff distances. Even with the latter, the minimum standoff distances cannot be encroached upon. These setbacks will establish the maximum buildable area. All standards in Appendix B of UFC 4-010-01 must be followed and as many of the recommendations in Appendix C that can reasonably be accommodated should be included. The facility requirements listed in these specifications assume that the minimum standoff distances can be met, permitting conventional construction. Lesser standoff distances (with specific minimums) are not desired, however can be provided, but will require structural hardening for the building. See Project Specific Requirements for project specific siting constraints. The following list highlights the major points but the detailed requirements as presented in Appendix B of UFC 4-010-01 must be followed.

(a) Standoff distance from roads, parking and installation perimeter; and/or structural blast mitigation

(b) Blast resistant windows and skylights, including glazing, frames, anchors, and supports

(c) Progressive collapse resistance for all facilities 3 stories or higher. Unless determined otherwise by the Installation and noted in paragraphs 3 or 6, the building shall be considered to have areas of uncontrolled public access when designing for progressive collapse.

(d) Mass notification system (shall also conform to UFC 4-021-01, Mass Notification Systems)

(e) For facilities with mailrooms (see Paragraph 3 for applicability) – mailrooms have separate HVAC systems and are sealed from rest of building

6.0 PROJECT SPECIFIC REQUIREMENTS FORT BRAGG, NC

6.1. GENERAL

The requirements of this paragraph augment the requirements indicated in Paragraphs 3 through 5.

6.2. APPROVED DEVIATIONS

The following are approved deviations from the requirements stated in Paragraphs 3 through 5 that only apply to this project.

6.2.1. 21 Sep 2010 ISEC approved waiver to I3A paragraph 2.4.3.1, which requires CATV demarcation point be located in Telecommunications Room. Ft. Bragg Paragraph 6.4.6.7(a) moves that to mechanical or electrical room.

6.3. SITE PLANNING AND DESIGN

6.3.1. General:

6.3.1.1. Project Specific Requirements: See Attachment J for site features included in this task order/contract.

Project Specific Requirements: See Appendix ZZ for site requirements.

6.3.1.2. Fort Braggs' strategic goal is to achieve a "sustainable community - meeting the needs of the Soldier today, tomorrow and forever." To achieve this goal, Fort Bragg's philosophy is to apply systematic considerations of environmental impact, energy use, natural resources, economy, and quality of life so the end result is a sustainable community by:

(a) Creating and enhancing sustainable training and urban areas to ensure military readiness and promote compatible growth of the surrounding community

(b) Becoming the model sustainable military community by using sustainable principles throughout the life cycle of all facilities and supporting infrastructure

(c) Achieving zero waste through acquisition and management of materials and commodities which throughout their lifecycle creates no additional waste nor requires resources for disposal

(d) Supplying reliable services and infrastructure with no negative impacts while aggressively reducing overall demand.

(e) Building a sustainable world-class ground transportation network providing seamless transition between multiple modes of travel while reducing harmful emissions

(f) Creating a culture which fosters sustainable life style to enhance the quality of life of the Fort Bragg community. This encompasses the social, mental, physical and spiritual well-being of its members.

(g) Minimize environmental impacts to natural resources using strategic planning and sustainable design to reduce project footprint ("clearing limits").

6.3.1.3. Fort Bragg's sustainable community objectives are energy savings, water savings/reuse; low-emitting, nontoxic materials, land/habitat loss minimization, reusable/recyclable building materials, tie

in to "community" sustainability features (e.g. continuance of bikes lanes/walking paths), turf areas/water intensive landscapes minimization, use of native plants, and use of low-impact development strategies for stormwater management.

6.3.1.4. Design Principles

(a) Plan and design site in a sustainable manner in accordance with all applicable references. The planning and design shall incorporate appropriate measures to address endangered, threatened, and special concern species; energy efficiency and renewable generation; materials reuse; multimodal transportation; native wildlife habitat protection and restoration; pollution prevention; public health and safety; water resources protection and restoration; and water use efficiency.

(b) Sustainable site plan, planning, design and development will address the need to conserve green space, preserve remnant old-growth trees, protect endangered species and wetlands, achieve maximum on-site stormwater infiltration, provide for greenways and link corridors of existing natural habitat for recreational value, quality of life and for wildlife/plants conservation. Sustainable site planning should include green space planning, and corridor development for recreational use and wildlife benefits Construction footprint shall minimize disturbance to soils to the maximum extent practicable in support of the installation sustainability goals.

(c) Base site design on the Beaux-Arts principles of balance, axial arrangements, symmetry, and site lines.

(d) Plant native trees, shrubs and grasses in accordance with Fort Bragg's plant list palette. See Appendix I. Theme tree emphasis will favor longleaf pine to support ecosystem management policy, sustainability, endangered species conservation, and sustainable communities.

(e) Multiple historic districts and individual historic properties are present at Fort Bragg. Fort Bragg's Cultural Resources Management Program (CRMP) reviews all construction projects through the NEPA review and clearance process and assesses their impact on historic properties. Construction projects with the potential to affect historic properties require close coordination with CRMP throughout project development and execution. Projects determined to affect historic properties may require consultation with the North Carolina State Historic Preservation Office (SHPO) under Section 106 of the National Historic Preservation Act, as codified in 36 CFR 800. All SHPO consultations will be initiated by CRMP and are typically completed in 45 days (including the mandatory 30-day SHPO review period). Some projects may require multiple 30-day SHPO reviews to complete the consultation process. Project schedules must take into consideration and make allowance for the requirement of SHPO consultation. When SHPO consultation is required, the process must be complete prior to the commencement of construction activities. This project is not within a historic district or view shed and does not require consultation with the SHPO..

6.3.1.5. Required Submission of Plans in Electronic Format

(a) At each submission stage project site plans and maps shall be submitted to Fort Bragg DPW, for review by Environmental Division (ED), in Bentley Microstation DGN V8 electronic format.

(b) The standard unit of measurement (horizontal and vertical) for all site plans and maps shall be the US Survey Foot.

(c) All site plans and maps shall be horizontally georeferenced to the NC State Plane Coordinate System, North American Datum of 1983 (NCSPCS, NAD83). All site plans and maps shall be vertically georeferenced to the North American Vertical Datum of 1988 (NAVD88).

(d) All maps and plans shall employ layers/levels per the US National CAD Standard (NCS). The project construction boundary shall be clearly depicted and labeled.

(e) The project construction boundary shall be comprised of closed polygons on the appropriate layer/level (C-PROP-CONS per the current NCS). Elements on the project construction boundary layer/level shall be limited to the project construction boundary. No other data will be placed on that layer/level.

Polygons shall be free and clear of duplicated vertexes and self-intersections. Point features such as borings, wells, trees, and test-pits shall be depicted by normal cells only (no shared cells).

6.3.2. Site Structures and Amenities

6.3.2.1. Supporting site structures shall preferentially include EPA-designated recovered materials products, USDA-designated bio-based products, and environmentally preferable products. The items identified in Appendix NN used in construction contracts must meet or exceed USDA Biobased and EPA RMAN requirements. Exemptions to the use of EPA-designated recovered materials products, USDA-designated bio-based products, and environmentally preferable products based on availability and performance must be cleared by the Sustainable Materials Planner or Sustainable Facilities Planner.

6.3.2.2. Supporting site structures shall utilize the same building materials and characteristics as the adjacent buildings. Provide the following site structures and amenities:

(a) Dumpster Screening shall match or compliment the surrounding facilities and current dumpster systems in the area. Locate dumpster pad to minimize backing of trash transfer vehicles. Locate dumpster pads and screening in accordance with setbacks in UFC 4-010-01. Access to dumpster pads should not be thru parking lots whenever possible to preclude mixing of large trucks, POVs, and GOVs. When required, limit the dumpster unloading vehicle backup distance to minimum distance possible.

6.3.2.3. Exterior Signage

6.3.3. Site Functional Requirements:

6.3.3.1. Stormwater Management Systems.

(a) The project shall be meet National Pollutant Discharge Elimination System (NPDES) requirements for stormwater management

(b) Comply with the NPDES General Stormwater Permit Requirements and all other associated NPDES permit requirements. The general permit is issued along with the Erosion Control permit from the NC Department of Environment and Natural Resources (NCDENR) - Land Quality Section and includes requirements to record rainfall events at the site, visually monitor and maintain records of the stormwater discharge, and maintain a log of the corrective actions required to remain in compliance. The contractor shall maintain records until the erosion control permit has been closed out by NCDENR.

(c) Develop and submit a Storm Water Pollution Prevention Plan (SWPPP) to the Contracting Officer's Representative (COR) and to the Ft. Bragg Water Management Branch for approval. After receiving approval from the Water Management Branch and concurrence from the COR, submit the SWPPP to the NC Division of Water Quality for approval. Pay all permit related fees. If the plan is found to be deficient correct the deficiencies and resubmit the plan.

(d) Design the permanent stormwater treatment measures to comply with NCDENR requirements as laid out in the NC Division of Water Quality's Stormwater BMP Manual. A copy of the BMP manual can be obtained at http://portal.ncdenr.org/web/wq/ws/su/bmp-manual.

(e) In addition to the NCDENR requirements:

(i) Design the permanent measures to keep the post construction rate of stormwater discharge for the 10 year, 24 hour storm at or below the pre-developed discharge rate.

(ii) Design the permanent measures to accommodate the 100 year, 24 hour storm without significant flooding or damage to the stormwater system and facilities/improvements in the surrounding area.

(iii) Calculate the pre-developed discharge rate and quantity of discharge as if the site was completely undeveloped forest land.

(iv) For Ft. Bragg use the following storm estimates. (1 year, 1 hour, 1.5 inches), (2 year, 1 hour, 1.8 inches), (10 year, 24 hour, 5.4 inches), (25 year, 24 hour, 6.5 inches), (50 year, 24 hour, 7.3 inches) and (100 year, 24 hour, 8.2 inches).

(v) Design the permanent measures to keep the post construction quantity of stormwater discharge for the 95 percentile rain event (1.8 inch 24 hr rainfall) at or below the pre-developed quantity of discharge unless it can be shown to be technically unfeasible due to soil types and/or space constraints. Infiltration of the stormwater runoff from the first 1.8 inches of rainfall is preferred, however, if infiltration is not technically feasible other uses of the excess stormwater such as on site storage for irrigation shall be investigated. Uses other than infiltration must receive approval from Ft. Bragg. Reference EISA 2007 Section 438 and EPA 841-B-09-001Technical Guidance on Implementing the Stormwater Runoff Requirements for Federal Projects under Section 438 of the Energy Independence and Security Act.

(f) Employ Low Impact Design (LID) to the Maximum Extent Practicable. Stormwater management shall focus on infiltration of stormwater and natural methods of pollutant removal. The use of vegetated filter strips and buffers, the conveyance of stormwater by vegetated swales rather than pipes, the use of curb cuts rather than curb inlets, the use of several small grass lined infiltration pools rather than one large basin, and the use of grass paving products for emergency vehicle access lanes rather than concrete or asphalt are preferred. For sites that infiltration has been found to be unfeasible, the stormwater system shall focus on quality (nutrients/sediments/pollutants) and rate of discharge.

(g) Do not use the following structural stormwater management measures without prior approval of the Water Management Branch, Directorate of Public Works: permeable/pervious pavements, green roofs, subsurface infiltration chambers, curb inlets and sand filters.

(h) Perform borings for potential stormwater management features to identify seasonal high water table as required by the NCDENR Division of Water Quality Best Management Principles Manual.

6.3.3.2. Erosion and Sediment Control

(a) Prepare an Erosion Control Plan (ECP) in accordance with the North Carolina Erosion and Sediment Control Planning and Design Manual, latest revision.

(b) The North Carolina Sedimentation Control Pollution Act of 1973, decrees that any land disturbing activity over an acre must have approved sediment and erosion control plan before construction begins, In addition, the Installation requires that all land disturbing activity, regardless of size, have an approved sediment and erosion control plan before any land disturbing activity can commence.

(1) The Fort Bragg Water Management Branch must approve all sediment and erosion control plans prior to submittal to the North Carolina Department of Environment and Natural Resources (NCDENR). Sediment and Erosion control plans must bear the Fort Bragg Storm Water Management Branch stamp prior to acceptance by NCDENR. Both agencies will review the plan(s) to ensure that all measures to retain sediment on the site during construction and all measures to prevent erosion after construction have been designed into the construction drawings. Agencies will review sediment control measures such as silt fence, temporary sediment traps, and construction entrances/exits for the proper sizing and installation.

(2) Once the plan(s) is approved, the Ft. Bragg Water Management Branch, the Corps of Engineers and the NCDENR will inspect construction to ensure that all work is performed in adherence to the approved plan.

(3) The site shall meet the appropriate High Density Design Requirements as described in the most current edition of North Carolina Stormwater Best Management Practices Manual. Reference website can be found at Appendix BB.

(4) Prior to any revision or deviation from the approved set of Sediment and Erosion control plans, submit new plans to Fort Bragg Storm Water Management Branch for approval prior to submission to NCDENR following the same process as outlined above.

(c) All pond type trash racks shall be solid walled, anti-vortex devices. Bar-type trash racks are unacceptable.

6.3.4. Site Structures and Amenities

6.4. SITE ENGINEERING

6.4.1. Existing Topographical Conditions

6.4.1.1. See Appendix J for a topographic survey and the site plan showing this project for information only. Coordinate the design with tie in points provided. Verify the information provided and any discrepancies that are found in the furnished survey and bring this information to the immediate attention of the Contracting Officer for clarification. Any additional survey required for the complete design and construction of this project shall be the responsibility of the Contractor.

[Not Supplied - PS_SiteEngineering_Topo : SITE_EXIST_TOPO]

6.4.2. Existing Geotechnical conditions: See Appendix A for a preliminary geotechnical report.

6.4.2.1. Verify the results of the Government supplied information provided and bring any discrepancies found in the finished survey to the immediate attention of the Contracting Officer for clarification. The provided site layout drawings are for guidance but the Contractor proposed site layout shall be similar in design

6.4.2.2. Locate primary facilities to avoid existing above and below ground utilities, government and privatized, traversing the site whenever possible.

6.4.2.3. Locate primary facilities in accordance with all AT/FP requirements.

6.4.2.4. Coordinate the new construction activities and erosion control measures with the adjacent facilities and erosion control measures.

6.4.2.5. Limits of Construction:

(a) The Limits of Construction are shown on the provided drawings. Confine all work within the Limits of construction except as needed to tap into existing utility lines or maintenance holes.

(b) Provide drawings to Fort Bragg to coordinate locator service outside of construction limits prior to conducting any digging outside of the construction limits.

6.4.3. Fire Flow Tests See Appendix D for results of fire flow tests to use for basis of design for fire flow and domestic water supply requirements.

6.4.4. Pavement Engineering and Traffic Estimates:

6.4.4.1. A professional engineer, licensed in the State of North Carolina, shall design all rigid and flexible pavements in accordance with the Contractor’s final geotechnical report.

6.4.4.2. Vehicular Parking Areas

(a) Do not use permeable pavements, including segmented pavers, pervious concrete or pervious asphalt in vehicular parking and other pavements.

(b) Design parking areas surface slopes between 0.5% and 2% with a maximum of 3% in the parking stalls. Layout parking lots so that drainage conforms to the existing general site contours to provide the maximum utilization of water gardening or bio-retention ponds on site.

(c) Hardstand slopes shall be between 0.5% and 2.0%. Slope all hardstands away from readiness and covered hardstands.

(d) Design parking lots to avoid ponding of water.

(e) Wheel stops shall be slotted along bottom edge to allow water to pass beneath the wheel stop.

(f) Parking Area access lanes shall be a 24 ft wide minimum from the edge of pavement.

(g) Motorcycle parking spaces shall be concrete, 9' x 18' long with appropriate signage. Locate motorcycle parking pad at end of parking lines to allow up to 4 motorcycles to be parked in one spot using the 18 foot side. Identify kickstand locations with inset steel plates.

6.4.4.3. Emergency Vehicle Access and Service Drives. Design emergency vehicle access with NFPA, UFC 3-600-01, and as required by the Installation (FB Fire Dept is AHJ). Consider an option for use of grass paver type products for emergency vehicle access if soils engineering studies indicate ground can support such structures.

6.4.4.4. Vehicle Crash Barriers (as applicable to certain facility types)

(a) Locate vehicle crash barriers at all emergency vehicle access and service drives to barracks and battalion headquarters buildings and all service drives leading to the company operation facilities service yard.

(b) Vehicular crash barriers shall be pad lockable in the open and closed position and meet the minimum crash certification of K1.1/L3. Barrier arm surface shall have a rust inhibiting painted surface and shall be furnished with 4-inch wide reflective paint spaced at every 20 inches.

(c) Drop arm barrier shall be counter weighted for ease of lifting by a single person.

(d) The use of removable, bollard type barriers is not allowed. Locate AT/FP measures in accordance with applicable criteria.

6.4.4.5. Sidewalks

(a) Sidewalks shall provide an ample functional system of walks connecting structures, parking areas, streets, and other walks as pedestrian traffic demands. In addition, carefully review paths of travel between buildings within this and adjacent complexes to determine a layout of sidewalks that is sufficient to meet the likely paths of travel.

(b) Locate sidewalks a minimum of 5 feet from main roads and streets. Slope sidewalks to meet all requirements for ADAAG. Construct sidewalks of Portland Cement Concrete.

(c) Emergency vehicle access and service drives shall be a concrete sidewalk designed to support multi-story ladder trucks weighing 75,500 pounds on three axles; two axles are double tired.

6.4.4.6. Flexible Pavement Design

(a) Design heavy duty flexible pavements to support H-20 loading.

(b) Design light duty flexible pavements to support 5,000 lb axial loading.

(c) Pavement designs over cohesive soil subgrades require under-drain systems.

(d) The flexible pavement design shall be larger of the calculated flexible design thickness and the minimum flexible design thickness.

6.4.4.7. Rigid Pavement Design

(a) Design rigid pavements to support H-20 loading.

(b) The minimum pavement section shall be 6 inches rigid concrete pavement over 6 inches of compacted aggregate base course.

(c) Pavement designs over cohesive soil subgrades require under drain systems.

(d) Provide a concrete joint layout plan for all concrete pavements. Show joint spacing, joint types, and joint grading.

6.4.4.8. Additional Requirements:

[Not Supplied - PS_SiteEngineering_Pavement : SITE_PAVEMENT_ENGINEERING_AND_TRAFFIC]

6.4.5. Traffic Signage and Pavement Markings

6.4.5.1. A Professional Engineer (PE) licensed in the State of North Carolina, qualified and experienced in traffic engineering and signal design must perform traffic signalization plans and design work to include road closure plans.

6.4.5.2. All pavement marking and road way signage shall be in compliance with the Manual of Uniform Traffic Control Devices (MUTCD) and Federal Highway Administration (FHWA) policies.

6.4.5.3. Four (4) inch thermoplastic white reflective material is the only authorized material for stripping.

6.4.6. Base Utility Information

6.4.6.1. General.

(a) Prior to interim (or final if no interim package) site design, coordinate and validate with the survey on the locations and sizes of all existing utility services, above and below ground.

(b) Install and reconnect temporary utilities for buildings which are supported by utilities which will be demolished/or relocated during construction. Coordinate service interruption two weeks in advance with the DPW. Sandhills Utilities Service will supply the electric meter.

(c) All Building Utility meters including but not limited to: Water, Gas and Electric shall be compatible with the Army metering program pursuant to Public Law 109-58, Section 103 of the Energy Policy Act of 2005. The intent is for all utility meters to report their data to the installations base-wide Utility Monitoring and Control System (UMCS). The utility meters must provide data at least daily and measure at least hourly consumption of electricity. The means for meter data transmission will be by using ANSI/CEA 709.1b (LONWorks). Wireless is not an approved means of communication at Fort Bragg. A key element for success will be integrating these systems with the Installation's UMCS. Coordinate type of metering required for DDC monitoring with Energy Manager. Contact the DPW for more detailed specifications.

(1) All new buildings shall have a water meter installed and connected back to the Utility Monitoring & Control System (UMCS) via the buildings Direct Digital Control (DDC) system. The privatized utility provider, Old North Utility Services, Inc. (ONUS) will provide and install the meter under separate contract with the Government. The Contractor is responsible for electrical connections to the meter under this contract.

(2) Install a gas meter in all new buildings and connect back to the Utility Monitoring & Control System (UMCS) via the buildings Direct Digital Control (DDC) system. The meter shall send a Pulse output to the DDC system.

(3) Electrical power metering/ monitoring shall be from a digital metering on the main power panel (service entrance). Transfer data to the DDC panel by installed conduit and cat 6 cabling (not from the building transformer meter.) Provide a 1-inch conduit from the electric utility meter to a data collection point located in a DDC panel inside the building mechanical room. In addition, provide CAT 6 cable from the communications room to the building point of connection (BPOC) located a DDC Control panel in the building mechanical room. Coordinate location with the Ft. Bragg UMCS manager.

6.4.6.2. Storm drainage service and natural gas on this installation is not privatized.

6.4.6.3. Water and Sanitary Sewer Services:

(a) Water and Sanitary Sewer services on this installation are privatized. Contact Old North Utility Services, Inc. (ONUS), 110 N. Fourth St., Spring Lake, North Carolina 28390, 910-495-1311.

(b) Provide one separate fire sprinkler service connection, one separate potable water service connection and one separate sanitary sewer service connection per building.

(c) ONUS will act as a Prime Contractor (in a separate contract between the Government and ONUS) for design and construction of exterior potable water, fire water and exterior sanitary sewer to points of connection identified in Appendix C.

(d) Coordinate water requirements and connections with ONUS.

(e) Coordinate sewer requirements and connections with ONUS. No tapping of the existing water distribution or sanitary sewer system is authorized without prior approval of ONUS.

(f) ONUS is responsible for filing, maintaining and closing water permits and sanitary sewer permits for the project. Contact ONUS for a copy of the latest approved installation standards and specifications.

(g) Model the fire flows and inlet pressures for this facility in concert with ONUS to construct a water distribution model. Verify that the fire flow and pressure requirements for the new facility are less than or equal to the modeled flows and pressures.

6.4.6.4. Natural Gas: The existing underground gas distribution system at Fort Bragg is not privatized.

(a) Natural Gas distribution lines are shown on drawings in Appendix J (Drawings) and shall be considered as an available heating fuel source for the facility design. The Contractor shall coordinate point of connection to the facility with Fort Bragg Exterior Utilities through the COR.

(b) Honeywell manages gas utility service laterals at Simmons Army Airfield and those which feed individual buildings on Fort Bragg: that are Honeywell installed. See Appendix C for POC.

(c) Fort Bragg manages the remaining natural gas laterals on Fort Bragg and Pope Air Force Base. See Appendix C for POC.

(d) The distribution system pressure is approximately 22 psig to 30 psig. If gas is determined to be the most life-cycle cost effective alternative, the system design shall comply as follows:

(1) Contractor shall design, tie-in, layout/route and install gas distribution system up to and within the facility (including the gas meter/regulator assembly.

(2) Coordinate and field verify site conditions prior to performing any work. See Appendix C (Utility Connection) and the site plans for additional information.

(3) Install copper or other metallic tracer wire for all new non-metallic gas lines (natural and LP). Install the tracer wire below the pipe and connect from manhole to manhole (valve to valve, etc) with enough additional length for the end to reach the ground surface for the attachment of energizing equipment. Wire shall enter the manhole so it is not cut or severed during installation. Also install metallic marking tape, approximately 18 inches below ground surface.

6.4.6.5. Chilled and Hot Water. Honeywell manages Chilled and Hot Water: Chilled Water (CW), and High Temperature Water (HW) utility services on Fort Bragg. See Appendix C, (Utility Connection) for additional information and POC.

6.4.6.6. Communications System (Government)

(a) Communication service on this installation is owned by the Government. Design and install the Outside plant (OSP) communication infrastructure including cabling from a designated maintenance hole or service delivery point into the facility main telecommunications room.

(b) Complete the design and full construction of the work to include all cable splicing, count changes, reconfigurations, over overbuilds.

6.4.6.7. Cable Television (CATV) Service

(a) Extend one 4-inch duct from the CATV backboard to nearest maintenance hole or handhole in the site vicinity. Do not locate CATV demarcation point in the facility telecommunications room. CATV service provider shall coordinate with DPW for location of CATV demarcation point, usually placed in the mechanical or electrical room.

(b) Time Warner Cable Company (TWC) will provide and install service cabling throughout the project site, at the CATV demarcation point located in the facility mechanical or electrical room.. Coordinate site/facility interfaces with TWC.

(c) See Appendix C: UTILITY CONNECTIONS for additional information and requirements.

(d) Provide single sheet ¾'' A-C fire-rated backboard in room where CATV building entry is located. Plywood type as per I3A para. 2.5.6.

(e) Provide additional dedicated power outlet and grounding bar at CATV building entry area.

6.4.6.8. Telephone Service (Private Company)

The local telephone company, CENTURYLINK, will design and install outside plant (OSP), local (private) telephone service (e.g., subscription service to permanent party barracks). Coordinate with CENTURYLINK to assure duct line entry into the building.

6.4.6.9. Exterior Electrical Distribution System

The privatized electrical system contractor, Sandhills Utilities Services (SUS), will design and construct site electrical primary distribution to and within the project site under separate contract with the Government. See paragraph 6.9 and Appendix C (Utility Connection) for additional information and POC.

6.4.6.10. Underground Utility – Road Crossings. Use under-ground boring systems for all underground utilities that cross active road crossings to tie into existing utilities. Do not use open trench methods to cross roads unless a last resort and specifically approved by the Fort Bragg Director of Public Works. Support all piping, using spider spacers. Supporting with oak boards is not allowed.

6.4.7. Cut and Fill

6.4.7.1. Limit earth cut and fill slopes to no steeper than 3 horizontal to 1 vertical. Retaining or segmented walls are an option to limit the cut and fill. These slopes include the borrow pit.

6.4.7.2. Rough and possibly no cut/fill or grading in construction areas. Fill depression/holes from the removal building foundations and basements.

6.4.7.3. Compaction requirements shall be in accordance with ASTM D1557 (modified proctor), not ASTM D698 (standard proctor). The licensed geotechnical engineer or his authorized representative shall inspect, evaluate and approve all subgrades (pavements, floor slab, or foundation) prior to placement of overlying construction materials, as appropriate.

6.4.7.4. Ensure that the licensed project design geotechnical engineer oversees and directs proof rolling operations (for subgrade suitability); fill placement and compaction operations, including associated soil properties, compaction, and field density testing; and footing inspections on a full time basis. A Corps of Engineers validated geotechnical testing firm shall inspect, test, and document earthwork construction

6.4.8. Borrow Material: Presently there IS an available Borrow Pit(s) on Ft. Bragg. See location Plan. A permit is required to use the Fort Bragg soil borrow material pits per Section Borrow Pit permit.

6.4.9. Haul Routes and Staging Areas

6.4.9.1. See Location Plan for haul routes. Utilize only those haul routes identified on the drawing set included in this RFP.

6.4.9.2. Additional Site Requirements

(a) Identification of Employees. Provide to each employee and require each employee engaged on the work site to display identification as approved and directed by the Contracting Officer. Deliver prescribed identification to the Contracting Officer for cancellation upon release of any employee. When required, obtain and provide fingerprints of persons employed on the project. All personnel shall wear identifying markings on hard hats to clearly identify the company for whom the employee works.

(b) Employee parking. Employees shall park privately owned vehicles in an area designated by the Contracting Officer. This area will be within reasonable walking distance of the construction site. Employee parking shall not interfere with existing and established parking requirements of the Installation.

(c) Temporary Facilities. Administrative Field Offices: Provide and maintain administrative field office facilities within the construction area of the designated site unless approved by the Contracting Officer and the Installation. Government office and warehouse facilities are not available to the Contractor's or subcontractors' employees.

(d) Storage Area. Trailers, equipment, or materials shall not be open to public view with the exceptions of those items which are in support of ongoing work on any given day. Do not stockpile materials outside the fence in preparation for the next day's work. Park mobile equipment, such as tractors, wheeled lifting equipment, cranes, trucks, and like equipment within the fenced area at the end of each work day. Locate construction trailer(s) within limits of construction. Locate the laydown yard/storage area within the limits of the construction area unless previously approved by the Contracting Officer and the Installation.

(e) Temporary Utilities. All temporary utilities (water, sewer, electrical, telecommunications, etc) will be at the Contractor's expense and subject to Fort Bragg regulations. In the case of privatization utility Contractors, the Utility cost information is at Appendix K. Contractor must negotiate and contract with the privatization utility directly without benefit of the Government

(1) Coordinate with ONUS for any temporary water and sanitary sewer service. ONUS will provide estimate for connection costs.

(2) Coordinate with Sandhills Utilities Services for any temporary electrical services. Sandhills Utilities Services will provide estimate for connection costs.

(f) Appearance of Trailers, Storage Spaces, and Other Facilities within the Laydown Yard. Storage equipment and facilities used for administrative or material storage purposes shall present a clean and neat exterior appearance and shall be in a state of good repair. Trailers, which, in the opinion of the Contracting Officer, require exterior painting or maintenance, will not be allowed on the Installation.

(g) Maintenance of Storage Area. Keep fencing in a state of good repair and proper alignment. Should the Contractor elect to traverse, with construction equipment or other vehicles, grassed or unpaved areas, which are not established roadways, cover such areas with a layer of gravel as necessary to prevent rutting and the tracking of mud onto paved or established roadways. Gravel gradation shall be at the Contractor's discretion. Mow grass located within the boundaries of the construction site for the duration of the project. Trim grass and vegetation along fences, buildings, under trailers, and in areas not accessible to mowers and edge neatly.

(h) Security Provisions. Provide adequate outside security lighting at all temporary facilities. The Contractor shall be responsible for the security of its own equipment. Notify the appropriate law enforcement agency requesting periodic security checks of the temporary project field office

(i) Project Safety Fencing. As soon as practical, but not later than 15 days after the date established for commencement of work, furnish and erect temporary project safety fencing around the construction site. This fencing shall remain the property of the Contractor. The safety fencing shall be 9 gauge chain link fence, a minimum of 72 inches high, supported and tightly secured to steel posts located on a maximum of 10 foot centers, constructed at the approved location. Maintain the safety fencing during the life of the contract and upon completion and acceptance of the work remove all fencing from the work site. Prior to erection of any temporary project safety fencing, coordinate with Fort Bragg DPW Transportation Engineer, Ray Goff; 910-907-1759 to check appropriate traffic safety sight lines. Installation and locating of project safety fencing shall consider sight triangles at intersections, curves, and construction entrances.

(j) Temporary Hazard Safety Fencing. Furnish and erect safety fencing at temporary hazards and work site areas considered to be hazardous to the general public. This fencing shall remain the property of the Contractor. The safety fencing shall be high visibility orange, high density polypropylene grid or approved equal, a minimum of 42 inches high, supported and tightly secured to steel posts located on maximum 10 foot centers, constructed at the approved location. Maintain the safety fencing during the life of the hazard and remove all fencing upon completion and acceptance of the work.

(k) Cleanup. Remove construction debris, waste materials, packaging material and the like from the work site daily. Clean up any dirt or mud which is tracked onto paved or surfaced roadways. Store materials resulting from demolition activities which are salvageable within the fenced area described above or at a supplemental storage area. Neatly stack stored materials, not in trailers, whether new or salvaged.

(l) Restoration of Storage Area. Restore areas used by the Contractor for storage of equipment or material, or other use, to the original or better condition. Remove gravel used to traverse grassed areas and restore the area to original condition, including top soil tree and vegetative replanting and seeding, as necessary.

(m) Building and Crane Height Restrictions. Verify construction activities do not interfere with Simmons Army Airfield or Pope Air Force Base aircraft glide slopes and FAA height restrictions. Submit FAA Form 7460-1 for all cranes to be used on each building and for each building in the project to the FAA. Submit this form to the FAA a minimum of 60 days before the cranes arrive on site and the vertical construction of the buildings start. FAA Form 7460-1 is available from the Contracting Officer's Representative (COR) at the area office.

6.4.10. Clearing and Grubbing:

6.4.10.1. Clear and grub all brush and vegetation from the designated site area.

6.4.10.2. Tree Removal Plan. Develop a Tree Removal and Restoration Plan. Include a pre-existing tree survey (drawing) that clearly depicts: removed and retained trees; a table containing type tree species, size range (dbh) and number of trees to be removed and a functional replacement value for each size range (if tree replanting is applicable), as outlined by the Fort Bragg Tree Replacement Policy and Table, Appendix II.

(a) For projects under one acre, the tree survey will document tree size (by dbh), species, and location on the pre-existing tree survey drawing. Include the table identified above.

(b) Projects impacting vegetation will require habitat restoration (e.g. controlled burns, thinning, and/or mechanical or chemical mid-story hardwood removal) or tree restoration contingent upon project location and scale. Fort Bragg DPW Environmental Branch compliance officer will notify DPW and COE project manager and determine habitat or tree restoration requirements.

(c) Tree replacement plans must attempt functional replacement value by replanting trees on-site. If not applicable, replace trees off-site or a combination of both on-site and off-site may apply. Projects > 1 acre determine tree functional tree replacement value is at a ratio of 1:1 (acre for acre) to eliminate negative forest fragmentation effects. Include replanting locations and planting specification with each design submittal.

(d) Landscaping plan must consider providing species diversity, green space planning, corridor development, wildlife value, etc. Plantings must consider “natural community” (i.e., aggregate clumping and composition, and structural layers (ground, mid-story and over-story). Green space areas should be juxtaposed to preexisting natural habitat to facilitate dispersal pathways (e.g., population demographics) for animals and plants, as well as, provide for recreational value.

(e) Plant pine trees during late fall (October-November) or early spring (February-March) to ensure maximum survivability and diminish likelihood of replacement. All replanting will be covered under a one year warranty and will be replaced under corresponding project funding.

Habitat restoration may be required in lieu of tree replacement contingent upon federal regulator guidance, available tree replacement locations, and benefit to impacts natural resources. Habitat restoration will be specified by the appropriate Environmental Management Branch subject matter experts and associated costs will be requested and included in the overall project funding. Habitat restoration may include one or a combination of the following: controlled burns, pine thinning, and/or mechanical or chemical mid-story hardwood removal.

6.4.10.3. Timber Harvesting. No merchantable tree sales are required at site. Stockpile tree and land clearing debris at the designated recycling area at the Fort Bragg Lamont Road Landfill Facility. Tree and land clearing debris shall be free of as much dirt as possible. Cut trees and limbs to manageable size, 4 to 6 feet length. Note: if the tree has a large diameter (example – 3 feet in diameter) cut it to lengths of 3 feet or less. Cut trees close to the stump for safe handling at the landfill facility.

(a)

6.4.11. Landscaping:

6.4.11.1. Develop a sustainable landscape plan in accordance with the Installation sustainable communities’ goals and priority.

6.4.11.2. Plant native trees, shrubs and grasses in accordance with Fort Bragg's plant list palette (Appendix I). Theme tree emphasis favors longleaf pine to support ecosystem management policy, sustainability, endangered species conservation, and sustainable communities.

(a) Place dense native evergreen mass vegetation (such Yaupon Holly, *Ilex vomitoria*, shrubbery) along all concrete, gravel, soil, and other pathway intersections to prevent ‘short-cutting’ outside the designated pathway surface. The length of dense native evergreen mass vegetation plantings shall generally extend at least 15 feet from the intersection edge along each pathway

(b) Do not specify invasive and/or exotic species (plant materials) in the Landscape Plan.

(c) Consider site utilities when developing the landscape plan to prevent conflicts. Avoid placing trees under light fixtures or shrubs in front of equipment doors and fire hydrants.

(d) If a temporary irrigation system is used, its use shall be limited to a period of one year to support turf establishment”. Remove the system upon completion of turf establishment.

6.4.11.3. The source water for all areas receiving irrigation shall be from rainwater harvesting, process water recovery, or other non-potable source. This does not include water wells.

6.4.12. Turf: Provide turf in all high traffic troop congested areas such as barracks, administrative facilities and dining facilities.

(a) Use centipede grass (Eremochloa ophiuroides) for low traffic grass turf areas.

(b) Use zoysia grass (Zoysia spp) for high traffic grass turf areas.

(c) The Fort Bragg preferred turf and seeding requirements are in Appendix I.

6.5. ARCHITECTURE

6.5.1. General: To the maximum extent possible within the contract cost limitation, the buildings shall conform to the look and feel of the architectural style and shall use the same colors as adjacent facilities as expressed herein. The Government will evaluate the extent to which the proposal is compatible with the architectural theme expressed in the RFP during the contract or task order competition. The first priority in order of importance is that the design provides comparable building mass, size, height, and configuration compared to the architectural theme expressed herein. The second priority is that design is providing compatible exterior skin appearance based upon façade, architectural character (period or style), exterior detailing, matching nearby and installation material/color pallets, as described herein.

6.5.2. **Design**

6.5.2.1. Appendix F is provided "For Information Only", to establish the desired site and architectural themes for the area. Appendix F identifies the desired project look and feel based Fort Bragg's Installation Architectural Theme from existing and proposed adjacent building forms; i.e. building exterior skin, roof lines, delineation of entrances, proportions of fenestration in relation to elevations, shade and shadow effects, materials, textures, exterior color schemes, and organizational layout.

6.5.2.2. The design should address Fort Bragg's identified preferences. Implement these preferences considering the following:

(a) Achievable within the Construction Contract Cost Limitation (CCL)

(b) Meets Milestones within Maximum Performance Duration.

(c) Achieves Full Scope indentified in this Solicitation

(d) Best Life-Cycle Cost Design

(e) Meets the Specified Sustainable Design and LEED requirements.

(f) Complies with Energy Conservation Requirements Specified in this RFP.

6.5.2.3. Priority #1 Visual Compatibility: Facility Massing (Size, Height, Spacing, Architectural Theme, etc.), Exterior Aesthetic Considerations: The buildings massing, exterior functional aesthetics, and character shall create a comprehensive and harmonious blend of features that are sympathetic to the style and context of the Installation. The Installation's intent for this area is as indicated in Appendix F. Site and architectural conceptual drawings that meet this objective are shown in Appendix F.

6.5.2.4. Priority #2. Architectural Compatibility: Exterior Design Elements (Materials, Style, Construction Details, etc.) Roofs, Exterior Skin, and Windows & Door Fenestrations should promote a visually appealing compatibility with the desired character while not sacrificing the integrity and technical competency of building systems.

6.5.2.5. See Appendix F for exterior colors that apply to Architectural character at Fort Bragg. The manufacturers and materials referenced are intended to establish color only, and are not intended to limit manufacturers and material selections.

6.5.2.6. Additional architectural requirements:

(a) Install fall protection anchor points on all roofs with a slope greater than 2:12

(b) Provide a Knox 4400 Series (single lock model) recessed wall mounted key vault for Fire Department use at each building exterior. Locate adjacent to the main building entrance. Coordinate purchase of key vault through the Installation Fire Department for purchase order information and forms.

(c) In addition to building number signage on building as indicated in paragraph 5, provide freestanding exterior building signage in accordance with Appendix H.

(d) No building shall be over six stories or penetrate identified air space management zones.

(e) Exterior Wall Protection: Construct the bottom five feet of exposed exterior walls of a durable material resistant (masonry or equivalent) to moisture damage and decay as well as impact damage caused during day-to-day soldier activities expected for the function of the facility. Material shall be easily maintained and/or repaired.

(f) Prepare and present for approval an exterior building finishes scheme no later than at interim design submittal. Present original samples of this scheme to reviewers no later than at the interim design review conference for each facility included in the contract.

(g) See Appendix L for Installation LEED preferences relating to exteriors.

6.5.3. Programmable Electronic Key Card Access Systems:

6.5.3.1. The existing Installation key card access system is SAFLOK with short core, manual key override, and manufacturer's longest lasting magnetic strip card.

6.5.3.2. Installation Key System: Installation keying system for non-card locks is Best Lock Corporation. Cores for locksets other than those for mechanical, electrical and communications rooms only shall extend the existing Installation Keying System. Key locksets for mechanical, electrical and communications rooms to the existing Post Utilities Master Keying System. All locksets and exit devices shall accept the same interchangeable cores.

6.5.4. INTERIOR DESIGN

6.5.4.1. Prepare and present for approval an interior building finishes scheme no later than at interim design submittal. Present original samples of this scheme to reviewers no later than at the interim design review conference for each facility included in the contract. Interior color scheme for each facility shall comply with one of the color schemes indicated for the facility type in Appendix F.

6.5.4.2. Toilet rooms, vestibules, bulkheads, stairs, message center, mail sorting, telecom rooms/SIPR (where specifically applicable to Project) and storage rooms will have painted gypsum board ceilings that meet CRITERIA. Mechanical rooms will have exposed structure. All other areas, including electrical rooms, will have two foot by two foot Omni-directional mildew resistant/moisture resistant acoustic ceiling tiles.

6.5.4.3. Provide a State of North Carolina licensed elevator inspector to inspect the installation, test all new elevators, applicable to project, and certify in writing that they meet all requirements. Provide the preventive maintenance program for the elevator for the initial warranty period of one year.

6.5.4.4. Where gypsum wall board (GWB) is used for interior walls, provide impact resistant GWB. For high abuse areas such as corridors. Interior paint shall be semi-gloss in wet areas and eggshell in all other areas. Provide ceramic tile walls, minimum 6'-0" high.in toilet rooms and janitor closets.

6.5.4.5. Items not included in contract (NIC):

(a) The Government will Provide and install (GF/GI) Furniture and accessories under separate contract.

(b) While fire extinguisher brackets and cabinets are Contractor furnished, the fire extinguishers are not in contract.

6.6. STRUCTURAL DESIGN

6.6.1. Treat subgrades under all facility foundations to resist subterranean and other wood destroying insects known to exist in the vicinity of the site. Treatment shall be in accordance with the environmental criteria referenced in this document.

6.6.2. Slabs on Grade. All interior slabs on grade, including storage and mechanical rooms, garages and carports, shall be underlain by a moisture vapor barrier consisting of lapped polyethylene sheeting having a minimum thickness of 6 mil and a minimum 4-inch thick capillary water barrier of open graded, washed pea gravel, or crushed stone, such as Nos. 57, 67, 78 or 89, except where a passive vapor intrusion mitigation system is required.

6.6.3. Structural Loading. Design building structures for the following types of minimum site specific live loads per most recent versions of ASCE-7 and IBC.

6.6.3.1. Roof live loads – (20 psf)

6.6.3.2. Snow load – (pg – snow ground load – 10 psf)

6.6.3.3. Wind load – 95 mph

6.6.3.4. Seismic loading - Use applicable references. Seismic design also includes the various systems, piping, hangars, etc.

6.7. THERMAL PERFORMANCE

No additional requirements.

6.8. PLUMBING

6.8.1. Reduce potable water use for building sewage conveyance by 50 percent through the use of water conserving or non-potable water fixtures. This can be accomplished through the implementation of high-efficiency and very high efficiency toilets, rainwater harvesting/use, sensing low flow and very-low flow faucets, and other appropriate technologies.

6.8.2. Non-Water Using Urinals – Install with urinal rim 17 inches AFF. Provide concealed chair carriers. If urinals use a replaceable cartridge, provide four (4) additional, long-life type cartridges for each urinal installed along with any tools necessary to remove/install cartridge, and an additional quart of biodegradable liquid for each urinal installed.

6.8.3. Wall hung water closets are not preferred. Tank type (6-liter) water closets are preferred.

6.8.4. Preferred sink is vanity with counter mounted lavatory.

6.8.5. Floor mounted water coolers are not preferred.

6.8.6. All fixtures shall be white and exposed fittings polished chrome.

6.8.7. Piping

(a) Use plastic pipe (Sch 40 PVC) for drainage and venting including under concrete slabs or inside buildings.

(b) Do not use cellular foam core piping.

(c) Use CPVC and Type L (or above) copper for water supply above slabs.

(d) Use type K (copper) for water supply under slabs.

(e) Provide wall hydrants at a maximum spacing interval of 200 feet around the exterior wall of the building. Hydrant will be box type, freeze proof, with an integral vacuum breaker/backflow preventer.

(f) Elevator Sump Pump. Terminate waste discharge from elevator sump into the sanitary sewer system (where elevators are provided). Provide an oil separator to accept the waste discharge prior to

emptying into the sanitary sewer system. When an “approved alarm system “ is provided and installed, an oil separator is not required and as a minimum, the alarm should provide a local audible and visual alarm, and shall provide a remote indication to the Building UMCS or similar monitoring system.

6.8.8. Provide domestic hot water equipment that provides the best Life Cycle Cost Analysis (LCCA) and not limited to gas fired or electric hot water heater.

6.9. SITE ELECTRICAL AND TELECOMMUNICATIONS SYSTEMS

6.9.1. General. Site development work shall include selected exterior electrical demolition, construction of secondary service, communications service, Cable TV, as shown on the drawings and as described in the contract or task order.

6.9.2. Building Electrical Site Work and Coordination. Conduct electrical site coordination meetings at the start of design and when necessary thereafter. Meetings shall include government representatives (DPW and NEC), privatized electric utility company (Sandhills Utilities Services), the local cable TV company (Time-Warner) and all other utilities involved in the site work, and the Corps of Engineers Contracting Officers Representative.

6.9.3. Exterior Electrical Distribution System

6.9.3.1. Design and construct the site electrical secondary distribution. Coordinate with SUS through the Contracting Officer, regarding primary routing and transformer locations, sizes, and impedances. Use power and telecommunication poles only as a last resort when no other method is readily available.

6.9.3.2. Design and construct exterior circuits connected beyond the Meter for sump pumps, irrigation pumps and other electrical and mechanical equipment. Stand alone circuits should be beyond a meter and SUS end at the line side of the meter socket. .

6.9.3.3. Do not locate above ground distribution equipment within 33 feet of buildings, including transformers. Small pedestrian lights, less than 4” base diameter, are excluded from this requirement.

6.9.3.4. SUS will demolish any existing exterior SUS above ground equipment no longer required on project site. Any below ground demo will need to be negotiated due to depth and location of underground facilities.

6.9.3.5. All work done by SUS shall be under a separate contract with the Government. THIS WORK IS NOT PART OF THIS CONTRACT.

6.9.3.6. Low voltage secondary service ductlines shall be direct burial, thick wall type minimum. Concrete encase in vehicular traffic areas (including construction vehicular traffic areas).

6.9.3.7. Provide rigid galvanized steel conduit, for transitions from below to above grade. Fittings for steel conduit shall be steel threaded or compression type. Screw, clamp or other type fittings are not acceptable.

6.9.3.8. Provide secondary service cables to the secondary compartment of the transformer. The cables shall be clearly marked [color coded or taped] and sufficient of length to facilitate their connection to the secondary lugs of the transformer. SUS will install the cable terminators and connect to the transformer.

6.9.3.9. See Appendix C: UTILITY CONNECTIONS for additional information and requirements.

6.9.4. Exterior Lighting

6.9.4.1. Lighting within the Old Post Historic District must meet the requirements of the Old Post Historic District Design Guidelines

6.9.4.2. Design the site lighting for installation by SUS (under separate contract). Supply the site design to SUS for them to plan installation of supporting conduits, exterior lighting bases, and other equipment.

6.9.4.3. See Appendix C: UTILITY CONNECTIONS for additional information and requirements.

6.9.5. Site Telecommunications

6.9.5.1. Reference I3A Para 3.7.4.5. Connect to the OSP, extending a new duct line, maintenance hole and cable system to the building main communications room. Each ductline between maintenance holes shall be minimum 4-way 4-inch, Schedule 40 PVC conduits. Coordinate design, construction and connection point location with the installation NEC. Typical drawings required for design can be found in I3A figures C2 thru C6. Entrance ducts shall be a minimum of a 3-way 4-inch duct line to the building main communications room.

6.9.5.2. Do not use the last remaining duct in any pathway system/ductbank. Include one spare duct for maintenance purposes in any segment of pathway or duct bank design.

6.9.5.3. Coordinate planning and design of outside plant communications systems on Fort Bragg with the Fort Bragg NEC. NEC will provide the following information and assistance for the proposed communication design

(a) Location of nearest fiber optic service and available strand count

(b) Location of the nearest copper service and available cable count

(c) Location of nearest maintenance hole, hand hole, or installation cable support infrastructure that can provide a duct tie-in point.

6.9.5.4. When no existing outside plant communications infrastructure is available near the proposed facility, the following requirements apply:

(a) Provide outside plant communications infrastructure from the nearest Area Distribution Node (ADN) or Remote Switch Unit (RSU).

(b) Provide a 3-way 4-inch duct line to the building main communications room. Use one duct to place the copper service cable. Use the second duct to place the fiber optic service cable along with one 3", 3 cell fabric mesh innerduct. The remaining duct is a spare.

6.9.5.5. Reference to I3A Para 3.7.8. Use Fabric Mesh Innerduct for duct and cable installations. Install 3 each, 3 inch, 3 cell fabric mesh with each fiber cable installation and in one of four newly installed ducts.

6.9.5.6. Reference I3A Fig C-5. Maintenance holes shall be 38YJ4 and shall include a moveable ladder.

6.9.5.7. Reference I3A, paragraph 3.7.1.3 (a). Size 30” maintenance hole lids are required unless otherwise specified or approved. Maintenance hole lids larger than the standard 30” size are extremely cumbersome when providing maintenance on cable infrastructure.

6.9.5.8. Outside Plant (OSP) Voice and Fiber Optic Service Cables: Provide OSP Voice and Fiber building service cables as follows:

(a) Extend all service cables through the new building service duct line.

(b) Terminate all OSP Voice Only service entrance cables on protected terminal blocks and all Fiber Optic cables on service entrance termination hardware located in the main communications room.

(c) Provide service entrance termination hardware for fiber optics service cables. Terminate the facility service data fiber optic cables on a patch panel, on 19-inch floor mounted standard racks. Terminate cables with 'SC' connectors at facility service entrance. Terminate the facility's data communication at an RJ45 patch panel in this rack. Provide patch cables (fiber and copper) and connect as required by NEC to meet I3A requirements.

(d) Demolish and remove any existing OSP cabling and communications duct bank no longer required on the project site.

6.9.6. Lightning Protection. Lightning risk assessment calculations shall be in accordance with NFPA 780, Appendix L, and other referenced criteria, utilizing the following variables:

6.9.6.1. Fort Bragg Lightning Flash Density Index "Ng" Value = 4

6.9.6.2. Determination of Environmental Coefficient Index "C1" = 1 (Isolated structure, no other structures located within a distance of 3H)

6.9.6.3. Determination of Structure Contents Coefficient Index "C3" Minimum value = 1 (Use larger if applicable)

6.9.6.4. Determination of Structural Occupancy Coefficient "C4" = 1 (Normally occupied)

6.9.6.5. Determination of Lightning Consequences Coefficient Index "C5" = 5 (Continuity of facility services required, no environmental impact.

6.9.6.6. Provide transient voltage surge protection.

6.10. FACILITY ELECTRICAL AND TELECOMMUNICATIONS SYSTEMS

6.10.1. Coordinate all work with Fort Bragg NEC.

6.10.2. Voice/Data Communications

6.10.2.1. LAN Hubs shall be Government Furnished/Government Installed.

6.10.2.2. Provide a quadplex power outlet and voice/data communications outlet every eight (8) feet of open wall space to support modular training in one classroom.

6.10.2.3. Reference the I3A Technical Criteria, paragraph 2.5.6. Cover no less than two walls with AC fire rated plywood.

6.10.2.4. Reference the I3A Technical Criteria, paragraph 2.3.3.1. Wire all copper outlets, patch panels, and connectors per T568A.

6.10.2.5. Use the following Cable Jacket and RJ-45 Color Code:Green **-** The standard wire and jack color for UNCLASSIFIED. Red **-** The standard wire and jack color for CLASSIFIED (SECRET). Yellow **-** The standard wire and jack color for CLASSIFIED (TOP SECRET).

6.10.2.6. Label in accordance with the Fort Bragg standard labeling scheme shown below:

6.10.3. Special Circuits – Fire Alarm and Utility Monitoring and Control Systems (UMCS).

6.10.3.1. Coordinate cabling and locations of demarcation points for all special circuits with DPW engineers or Emergency Services personnel for the associated discipline. Provide the premise cable design, installation and testing for all special circuits. Ft Bragg NEC responsibility for special circuit connectivity is at the Telecommunications Room only. Ft Bragg NEC is responsible for providing “IP” addresses for the special circuits along with any telecommunications room cross connects that will activate the circuit.

6.10.3.2. Terminate all special circuits to the first premise cable patch panel on ports 21-24, starting at 24 working in reverse. Label fire alarm circuits “FACP” and label Utility Monitoring & Control Systems circuits “UMCS”.

6.10.4. SIPRNET (Where specifically applicable to Project – see paragraph 3)

6.10.4.1. The entire SIPRNET infrastructure including PDS, wiring, and equipment (except for the GFGI encrypted servers) installed under this contract (if applicable) shall meet the Technical Guide for Integration of SIPRNET version 5.0 as a Hardened Carrier PDS and the following requirements:

6.10.4.2. Mount Distribution Systems (PDS) lock boxes sixty seven (67) inches above the finished floor in all private offices, unless otherwise allowed in designated Controlled Access Areas (CAA) areas.

6.10.4.3. Submit all PDS design and material data sheets to the NEC for approval, prior to procurement or installation to save from costly revisions or change orders. Design the PDS in strict compliance with the national security criteria.

6.10.4.4. Install a Holocom, Wiremold/Legrand or other Central TEMPEST Technical Authority (CTTA) approved expandable type PDS System. The PDS System attributes shall include an interlocking “clam-shell” design that enhances security and flexibility in that it can be securely closed and locked, and then re-opened for security inspections and network changes or enhancements. The PDS must also include an electrostatic powder coating, which provides an aesthetically pleasing appearance.

Per national security references, each agency, service, or organization is afforded interpretation and approval authority, by the Designated Approving Authority (DAA), per the respective manual when assessing any PDS design and installation methodology.

6.10.5. System Furniture:

Reference I3A paragraph 2.3.5.3. Ensure that telecommunication and power are installed in channels designed for such purpose. Do not install cables in panel gaps or interstitial space. Connect the furniture to the building cabling infrastructure through a ceiling mounted power pole, a wall mounted junction box (j-box) or underneath via a raised floor system and then channeled through the furniture. Do not expose cables between j-boxes and the furniture. Contain cables in flexible conduit. SIPRNET, if installed, shall enter through its own power pole system and channeled through an approved PDS. This configuration should provide all separation necessary to comply with TEMPEST requirements.

6.10.6. Elevators

Install conduit, wiring, and a telephone device as the emergency phone in the elevator cab. Government is responsible for making telephone operable including coordinating with the Ft Bragg NEC for service and connection to the Ft Bragg DES 911 Emergency Call Center.

6.10.7. Cable television (CATV).

Provide CATV in all private offices, conference, and classrooms. The cable television system shall consist of cabling, pathways, and outlets. All building CATV systems shall conform to APPLICABLE CRITERIA to include I3A criteria.

6.11. HEATING, VENTILATING, AND AIR CONDITIONING

6.11.1. The existing UMCS is an LCS-8520 that utilizes the LonWorks® Technology to integrate LNS databases into a single front-end. The UMCS is based on UFGS 25-10-10.

6.11.1.1. Fort Bragg's System Integration (SI) Contractor will integrate the building's BAS in accordance with UFGS 25-10-10 and the Fort Bragg UMCS Integration SOW, under separate contract with the Government. Coordinate through Fort Bragg's UMCS System Manager.

6.11.1.2. General Requirements

(a) Do not modify the chiller microprocessor supplied with the equipment. Control and safety functions should be the chiller manufacture's responsibility.

(b) Do not modify the boiler microprocessor supplied with the equipment. Control and safety functions should be the chiller manufacture's responsibility. If heating water systems are used, then design such systems to maintain the boiler manufacture's minimum temperature when in operation but vary the heating water supply temperature as required to meet the buildings requirements.

(c) Provide all DDC software, equipment and devices from a single common manufacturer whenever possible.

6.11.2. Mechanical Equipment Maintenance and Accessibility Requirements

6.11.2.1. Selected mechanical systems must be compatible with the existing systems and composed of standard commercially available items with readily available service and repair parts.

6.11.2.2. Any mechanical rooms above the first floor shall have an external access (door, removable louvers, etc of ample size such that the largest piece of installed equipment could be removed through the opening.

6.11.2.3. Install all piping, except individual fixture pipes, to permit equipment access without requiring removal of permanent walls, floor, or ceilings.

6.11.2.4. Arrange all equipment, piping, etc in mechanical rooms so that each piece of equipment can be removed without having to remove any other piece of equipment. Consider things such as coil pull areas in the mechanical room layouts.

6.11.2.5. Chillers: Chillers shall include as a minimum the following features

(a) Scroll or screw type compressors with 5-year parts warranty

(b) Microprocessor controllers with self-diagnostic capabilities

(c) Low ambient controls to zero (0) degrees F.

6.11.2.6. Fuels

Natural gas is the preferred fuel source for heating.

6.11.2.7. Pumps

(a) Hot Water and Chilled Water pumps shall operate at 1,750 rpm or less

(b) Mechanical Rooms: Heat to 40 F for freeze protection where piping may be subject to freezing.

6.11.3. Site Mechanical Equipment. Design all exterior mechanical equipment to be compatible with existing mechanical equipment within the surrounding area. This includes color and screening.

6.11.4. Outdoor Design Conditions

*1

6.11.4.1. Cooling. The outdoor design temperature for comfort cooling is the 1.0 percent dry bulb temperature, which is 93 degrees F and the corresponding mean coincident wet bulb temperature, which is 76 degrees F. The selection of evaporative equipment shall be based on the 1.0 percent wet bulb temperature, which is 78 degrees F.

6.11.4.2. Heating. The outdoor design temperature for comfort heating is the 99 percent dry bulb temperature, which is 25 degrees F.

6.12. ENERGY CONSERVATION

6.12.1. Inclusion of Renewable Energy Features. The following renewable energy features have been determined lifecycle cost effective, are included in the project budget and shall be provided:

*1

None identified.

6.13. FIRE PROTECTION

6.13.1. Provide fire extinguisher cabinets and brackets when fire extinguishers are required by UFC 3-600-01 and NFPA 101. Place cabinets and brackets shall in accordance with NFPA 10.

6.13.2. Provide semi-recessed cabinets in finished areas and brackets in non-finished areas (such as utility rooms, storage rooms, shops and vehicle bays).

6.13.3. Fire Extinguishers are Government Furnished/Government Installed for this project. Advise Government of required size and type Fire Extinguisher for each type building and service location

6.13.4. Fire Alarm System. Fire alarm panels must be addressable and must be able to communicate alarms to the Honeywell Enterprise Building Integrator System (EBI) located at the Fort Bragg 911 Center. Coordinate fire alarm zone descriptions and number with the fire department. (Single-story buildings typically require a minimum of 8 to 11 fire alarm zones; each floor above the first floor requires an additional 6 fire alarm zones.) Manual pull stations shall be metal, double action type, and shall not use break rods.

6.13.5. Mass Notification System

6.13.5.1. Provide a combined system that performs both as an individual building MNS and as the building Fire Alarm voice evacuation system. The MNS shall communicate with the base wide system. The base wide system is by Federal Signal and communication is by wireless transmission.

6.13.5.2. In addition to the applicable references and design criteria in paragraphs 4 and 5, see Appendix F for Fort Bragg Implementation Directions to Building Mass Notifications Specifications and Installation Guidelines

6.14. SUSTAINABLE DESIGN

6.14.1. LEED Rating Tool Version. This project shall be executed using LEED-NC Version 3.

6.14.2. The minimum requirement for this project is to achieve LEED Silver level. Each non-exempt facility (building plus sitework) must achieve this level. In addition to any facilities indicated as exempt in paragraph 3, the following facilities are exempt from the minimum LEED achievement requirement: None.

6.14.3. Credit Validation: LEED registration, compiling of documentation at LEED OnLine and use of the LEED Letter Templates is required. Registration and payment of registration fees will be by the Contractor. Administration/team management of the online project will be by the Contractor. Validation of credits will be accomplished by the Government. LEED certification of the project by the Contractor is required. The Contractor will obtain LEED certification prior to project closeout. Application, payment of certification of fees and all coordination with USGBC during the certification process will be by the Contractor. GBCI interim review of design phase data is not required by the Government but is recommended. Government validation during project execution does not relieve or modify in any way the Contractor's responsibility to satisfy all requirements for certification as defined by LEED and GBCI. Contractor is not responsible for design phase LEED documentation of any unaltered portion of the design that is accomplished by others. If the project includes unaltered complete design by others, during the certification process Contractor will coordinate all GBCI comments on LEED credits that fall outside Contractor's scope of responsibility with the Government for coordination with the Designer of Record, and Contractor will not be penalized if project fails to achieve certification at the minimum required level due to loss of credits that are the responsibility of others.

6.14.4. Commissioning: See Appendix M for Owner's Project Requirements document(s).

6.14.5. LEED Credits Coordination. The following information is provided relative to Sustainable Sites and other credits.

SS Credit 1 Site Selection:

Project site IS NOT considered prime farmland.

Project site is five feet or more above 100-year flood elevation.

Project site contains no habitat for threatened or endangered species.

No portion of project site lies within 100 feet of any water, wetlands or areas of special concern.

Project site WAS NOT previously used as public parkland.

SS Credit 2 Development Density & Community Connectivity.

Project site DOES NOT meets the criteria for this credit.

SS Credit 3 Brownfield Redevelopment.

Project site DOES NOT meets the criteria for this credit.

SS Credit 4.1 Public Transportation Access.

Project site DOES NOT meets the criteria for this credit.

EA Credit 6 Green Power.

35% of the project's electricity WILL NOT be provided through an Installation renewable energy contract. Do not purchase Renewable Energy Credits (REC's) to earn this credit.

MR Credit 2 Construction Waste Management.

The Installation has an on-post recycling facility.

Regional Priority Credits (Version 3 only)

The project zip code is 28310.

6.14.6. LEED Credit Preferences, Guidance and Resources. See Appendix L LEED Project Credit Guidance for supplemental information relating to individual credits.

6.14.7. Not Used

6.14.8. For all Fort Bragg projects using LEED Online, invite the following individuals at the beginning of the project, assigned QA/QC role: Lynda.s.pfau.ctr@mail.mil, Judith.f.milton@usace.army.mil, Stephen.d.bentley@usace.army.mil, Savannah District Project Manager, Fort Bragg Project Manager (name varies - coordinate at kickoff meeting).

6.14.8.1. Additional Information

LEED credits SS4.3 and SS4.4 are prohibited by Fort Bragg.

Contractor's commissioning support obligations (per paragraph 5.3.1) are as indicated in Specification 01 91 00 COMMISSIONING located at Appendix M.

6.15. ENVIRONMENTAL

6.15.1. Spill Response Procedure and Plan

6.15.1.1. Notify the Fire Department immediately in the event of a hazardous spill. The first person on-scene that identifies the hazard must notify the Fire Department – this may or may not be the designated POC.

6.15.1.2. After notifying the Fire Department, call the DPW Environmental Compliance Branch and the Contracting Officer.

6.15.1.3. The Fort Bragg Fire Department and DPW Environmental Compliance Branch are responsible for any off-installation notification.

6.15.1.4. Provide a Spill Response Plan for review. Include a list of reporting channels, telephone numbers, a listing of the hazardous materials stored on site, copies of Material Safety Data Sheets for the hazardous materials, and a site diagram outlining where the storage sites are located. Train all supervisors on site in the execution of the Spill Plan. Document all training.

6.15.2. Wetlands and Stream Crossing

6.15.2.1. Do not enter, disturb, or allow any discharge (soil, sediment, and/or pollutants) into any wetlands.

6.15.2.2. Comply with all local, state, and federal laws and regulations pertaining to the protection of wetlands under the CWA Section 404/401 regulatory program and North Carolina DENR Division of Water Quality.

6.15.2.3. If wetland impacts are unavoidable, abide by CWA Section 404 regulatory program and apply for applicable wetland permits. All wetland permit costs, delineations, and compensatory mitigation costs will be the contractor's responsibility.

6.15.2.4. Comply with avoidance, minimization strategies prior to approval of any wetland impact in accordance with CWA Section 404 (CWA 33 USC 1344).

6.15.2.5. All stream crossings will avoid impacts to navigable waters and wetlands. Do not enter, disturb, destroy, or allow discharge (fill) of soil, sediment, or contaminants into the stream.

6.15.2.6. Comply with all local, State, and Federal laws and regulations pertaining to the protection of surface waters to include but not limited to lakes, ponds, streams, creeks, rivers, and bayous.

6.15.3. Safety and Health Requirements for Construction Activities

6.15.3.1. Work performed under this contract shall comply with EM 385-1-1, specifically 28.A, applicable Federal, State, and local safety and occupational health laws and regulations. This includes, but is not limited to, Occupational Safety and Health Administration (OSHA) standards, CFR 29 Part 1910, especially Section .120, "Hazardous Waste Site Operations and Emergency Response" and CFR 29 Part 1926, especially Section .65, "Hazardous Waste Site Operations and Emergency Response". Submit matters of interpretation of standards to the appropriate administrative agency for resolution before starting work. Where the requirements of this contract, applicable laws, criteria, ordinances, regulations, and referenced documents vary, the most stringent requirements shall apply.

6.15.3.2. Ensure that all subsurface disturbing activities are monitored by a competent person using a direct reading instrument capable of detecting any VOCs that may be released.

6.15.3.3. Develop a Site Safety and Health Plan (SSHP) to cover the safety and health aspects of the subsurface contamination detailed in Section 6.12.1, which may be encountered during the execution of this project. In some areas the Contractor may encounter contaminated groundwater which may need to be dewatered to execute construction activities. Although the contamination is in the soil, VOC vapors may also be released during excavation of footers, utility trenches, and other subsurface disturbing activities.

6.15.3.4. The Savannah District Safety and Occupational Health Office are required to review and accept the Site Safety and Health Plan. In addition to the requirements detailed in 385-1-1 28.A, submit the following as part of the SSHP: Certifications of Hazard Waste Site Training and Experience, Medical Clearances, and Licenses. Do not submit materials with full social security numbers or personal medical data. Black out this information.

6.15.4. Dewatering

6.15.4.1. If dewatering of excavations is required, the water being removed shall be considered as contaminated with SVOCs and/or VOCs.

6.15.4.2. Fort Bragg Directorate of Public Works Environmental Compliance Branch (DPW-ECB) and Water Management Branch (WMB) must approve the specific structural stormwater management measures.

6.15.4.3. All stormwater management requirements apply to dewatering activities, materials, and water. All OSHA health and safety requirements apply to dewatering activities.

6.15.5. Not used.

6.15.6. Existing Monitoring Wells

6.15.6.1. Should any wells be damaged, or found to be placed in an area where they will become damaged, contact the USACE project manager for directions on how to close and where to re-install the wells. Close and reinstall GW monitoring wells at no additional cost to the Government. For further information, reference Fort Bragg's Standing Operating Procedure (SOP) #6003.

6.15.6.2. Protect all groundwater monitoring wells at construction sites with known contaminated areas.

6.15.6.3. Raise the tops of or lower existing monitoring wells located in pavements and sidewalks to meet new finished grades and replace the tops with vehicle rated tops.

6.15.6.4. Relocate ground-water monitoring wells located within building footprints only after written approval from the State and the Contracting Officer.

6.15.6.5. Repair or replace any monitoring wells damaged as a result of construction at the Contractor’s expense.

6.15.7. Contractor Generated Spills

(a) Manage, store, dispose and dispense petroleum products, hazardous materials, and hazardous wastes according to all Federal, state, and local regulations (including Fort Bragg Regulations 200-1, 200-2, and 200-3).

(b) Transport generated hazardous waste off Government property to a permitted transportation, storage, and disposal facility (TSDF).

(c) Coordinate with the DPW Environmental Compliance Branch Hazardous Waste Program Manager to obtain the EPA ID number for the standard manifest. Hazardous waste cannot leave the installation without the designated representative from the DPW Environmental Office signing and obtaining a copy of the manifest.

6.15.8. Historic Properties. Inadvertent Discovery of Cultural Material. If any artifacts or objects related to cultural resources become evident during construction or construction-related activity, ,stop ground disturbing activities immediately and notify the Contracting Officer and the Fort Bragg Cultural Resources Program Manager at 910-396-6680. Cultural resource objects or artifacts include but are not limited to: bone, shell, stone tools, ceramics, bottle glass as well as metal objects relating to any time period before 1950 but excluding post-1940 military training debris (e.g. shell casings, shrapnel, wire etc.

6.16. PERMITS

6.16.1. The Government has not obtained any permits/licenses related to this project.

6.16.2. Obtain ALL applicable permits as part of the design process and secure ALL permits necessary for construction of the project. Determine fee basis and pay all filing fees at no additional cost to the Government.

6.16.3. Comply with provisions of the Installation permits, compliance agreements, plans with regulating authorities/agencies.

6.16.4. Submit copies of permits to the Contracting Officer and Ft Bragg Environmental Division in sufficient time to allow for review and revision with ultimate submittal 10 days prior for the associated permitted activity. Provide copies of permit amendments to the Contracting Officer representative and Ft Bragg Environmental Division.

6.16.5. Erosion and Sediment control ((E&SC) Permit: After issuance by , NC DENR Department of Water Quality (DWQ), changes to the issued permit are prohibited.

6.16.6. Water and Sanitary Sewer Permit. ONUS, as the Fort Bragg water and sewer privatization contractor, is responsible for all aspects of obtaining and closing the potable water and sanitary sewer permits for this project.

6.16.7. Borrow Pit Permit. A permit is required to use the Fort Bragg soil borrow material pits. Process soil borrow pit permits with the Environmental Branch of the Directorate of Public Works Environmental Sustainment Division through the Contracting Officer Representative.

(a) Permits are issued for the life of the contract only.

(b) Borrow material may only be used on the project for which the permit(s) are issued.

(c) Keep a copy of the signed permit with the borrow hauling vehicle throughout the borrow operation period.

(d) Copies of the borrow permit can be found in Appendix DD.

6.16.8. Construction and Demolition (C&D) Waste

6.16.8.1. Obtain and pay for all permits associated with demolition.

6.16.8.2. Landfill tipping fees for construction debris WILL NOT be charged to the Contractor at time of award contract. If applicable, the landfill tipping fees are identified in Appendix CC.

6.16.8.3. Construction and Demolition (C&D) permit is required to use the Fort Bragg LaMont Road Construction and Demolition Landfill Facility (Permit No 26-08). Follow requirements identified at http://www.bragg.army.mil/envbr/solidwaste.aspx regarding disposal of inert construction and demolition waste in the Ft Bragg C& D landfill sites.

(a) Process the Construction and Demolition (C&D) permit with the Environmental Branch of the Directorate of Public Works Environmental Sustainment Division through the Contracting Officer Representative.

(b) Permits are issued for the life of the contract only.

(c) Only materials produced on the project for which the permit(s) are issued may be disposed of in the land clearing and inert debris/demolition landfills.

(d) Keep a copy of the signed permit with the hauling vehicle(s) throughout the borrow operation period.

(e) Copies of the disposal permit can be found in Appendix CC.

(f) Obtain and pay for all permits associated with demolition.

(g) The contractor is encouraged to recycle commodities through the Ft. Bragg QRP.

6.16.9. Fort Bragg Excavation (Dig) Permits

6.16.9.1. Present an Excavation Permit, FB Form 1605, to the Resident Engineer for approval by the Facilities Engineer prior to any excavation that penetrates the ground by 6 or more inches. A sample of this form is included at Appendix HH or can be obtained from the Resident Office upon request.

6.16.9.2. Spot all utility lines using an independent spotting service prior to beginning excavation. Keep a signed copy of the digging permit on site at all times. Fort Bragg may conduct back check spotting excavation during the excavation portion of this contract.

6.16.10. Title V Air Permits

6.16.10.1. Coordinate with Fort Bragg's Environmental Branch, point-of-contact (POC) Gary Cullen (910-432-8464), Air Program Manager, in obtaining all required and applicable permits as part of the design process. Secure all permits necessary for construction of this project to include the purchase of any add-on emission control devices (if applicable) associated with this project, and at no additional cost to the Government.

6.16.10.2. Fort Bragg operates under a Title V Air Permit for air quality requirements. Perform a regulatory review of all air sources in the project and submit for approval to the Environmental Compliance Branch (ECB).

(a) New sources must be reviewed for Prevention of Significant Deterioration (PSD) applicability. Each Congressional Appropriation is defined as one project. Additionally, new sources must be reviewed for NESHAP (National Emissions Standards for Hazardous Air Pollutants) applicability.

(b) Develop required air permit application(s) and/or coordinate with ECB on any on-going permit applications.

(c) Pay all Air Permitting fees to NCDENR (North Carolina Department of Environment and Natural Resources). Obtain all required permits prior to construction of any new sources.

(d) Comply with all State regulatory requirements for boilers fired by either natural gas or distillate oil. Ensure that the boiler(s) is included in the Installations Title V Air Permit.

(e) New boilers with input greater than 10 million BTU/hr shall meet 40 CFR Part 60, New Source Performance Standards.

(f) All new boilers shall include low NOx burners.

(g) Obtain an air permit for each type of material (i.e. concrete, rock crushing, and asphalt batch plants) that will produce dust and other harmful particulates within the boundaries of the installation.

(h) The Contractor may not unilaterally change the Installation's Title V Air Permit. Coordinate any and all changes/modifications through the designated Environmental Branch staff.

6.16.10.3. Air Permit Submittal Requirements (Boilers and Domestic Water Heaters). Pursuant to satisfying requirements under the Clean Air Act, at or before the 60 percent design stage, submit the following to the installation's environmental office, point-of-contact (POC) Gary Cullen , Air Program Manager:

(a) A listing of boilers and domestic hot water heaters that will be fired by natural gas, propane, and/or fuel oil

(b) The fuel or fuels (primary and backup, if applicable) that will be utilized for each piece of equipment

(c) The quantity of each particular size

(d) The respective input firing rate.

(e) Provide a point of contact and an alternate point of contact, should the environmental office require additional information from the designer of record during the permitting process.

(f) Send two copies of the document to the Savannah District: one to the Project Manager for placement in Central Files, and another to the Mechanical Section.

6.16.10.4. Document Changes

(a) Do not send the Air Permit prematurely, since any increase in boiler sizing subsequent to submission of the document will require revision to the permitting process,

(b) If there is a change in equipment sizing during refinement of the design process, submit an updated copy of said document.

6.16.10.5. Incorporate the equipment accessories required for compliance with the governing environmental laws into the design. This includes, but is not limited to, determining the need for individual metering and the level of emissions monitoring required.

6.16.10.6. The interim design narrative shall specifically address those features that will be incorporated into the boiler system design to assure compliance with the applicable environmental laws of the State.

6.16.10.7. Normally, for fast track design-build contracts, the Air Permit construction permit will not have been obtained prior to award of the design-build contract.

(a) No construction associated with the building(s) housing the boiler(s) or other source(s) of contaminant can be done prior to obtaining the required permit.

(b) The following things can be done prior to possession of the permit: clearing and grading, access roads, driveways, parking lots, underground utilities up to the 5-foot line of the buildings, and ancillary structures (structures not associated with housing the sources of contaminants).

6.16.10.8. If the use of temporary rental or leased equipment is required during demolition, renovation, or construction of the project, the emissions from those pieces of equipment need to be qualitatively and quantitatively reviewed for air quality permitting requirements.

(a) Assess those needs and any permitting required will be the responsibility of the contractor.

(b) Contractor is responsible for any permitting fees or resulting permit compliance associated with the temporary equipment. Examples include the use of temporary electrical generators, boilers, painting operations, abrasive blasting operations etc. to support the project. Per 15A NCAC 2D .0300

6.16.11. State of North Carolina Required Applications and Permits. Prepare, sign, and submit the following list of commonly required State of North Carolina applications and permits for Fort Bragg projects

6.16.11.1. North Carolina State Demolition Permits

6.16.11.2. North Carolina State Asbestos Removal Permit

[Not Supplied - PS_Permits : PERMITS]

6.16.11.3. North Carolina Erosion and Sedimentation Control Permit. Create and implement an Erosion and Sedimentation Control (ESC) Plan that conforms to the Fort Bragg EPA Construction General Permit, and local erosion and sedimentation control standards/ codes in effect at the time of award.

6.16.11.4. North Carolina General Permit to Discharge Stormwater under the National Pollutant Discharge Elimination System

6.16.11.5. North Carolina Stormwater Management Permit Application Form

6.16.11.6. North Carolina Notice of Intent (NOI) and Notice of Termination (NOT) Documents. Prepare, sign, and submit the NOI and NOT documents to the State of North Carolina.

6.16.11.7. Obtain any North Carolina additional applications and permits not listed as required for the construction of this project.

6.17. DEMOLITION

6.17.1. The Government will identify buildings and other existing features to be demolished in the site plans, as applicable to the project. Demolish building(s)and other demolition work within the construction footprint to include demolition, asbestos containing materials (ACM) abatement and hazardous building materials (HBM) removal, removal of foundations, capping underground utilities (water, sewer, natural gas, heating and chilled water, etc.) and other site improvements. Comply with Federal, State and local statutes, ordinances agreements and as described in this RFP.

(a) The Contractor IS NOT authorized to perform a full remediation of the site under this Contract.

6.17.2. Copies of ACM and HBM surveys are included in the RFP in Appendix AA, where applicable to the project.

6.17.3. The construction and waste management plan shall identify the materials to be diverted from disposal and sorted onsite.

6.17.4. In the case of buildings that are in the direct footprint of the project, the Government will move demolition building occupants and furnishings prior to the Contract NTP date except where movement is not in the best interests of the Government. Such cases will be identified in the Contract.

6.17.5. Notify Directorate of Public Works (DPW) through service orders (Telephone 910-396-0321) to disconnect all utilities to demolition buildings to include electricity, natural gas, propane gas, and fuel oil.

6.17.6. Demolition of potable or fire water mains and lines or sanitary sewer mains and lines.

[Not Supplied - PS_Demolition : ONUS_CONTRACTOR_REQUIREMENTS]

6.17.7. If the Contractor plans to use a demolition building for administrative or storage:

6.17.7.1. Notify the Government through the Corps of Engineers in writing of their intent during contract negotiations.

6.17.7.2. DPW will disconnect utility services, but not remove them.

6.17.7.3. The Contractor is responsible for installing appropriate electrical, water, and gas meters for the building. If connecting to privatized utility (water, gas, or sewer), contractor must coordinated with privatized utility company for installation of services. All costs associated with the connection shall be paid for by the contractor

6.17.7.4. DPW will reconnect the metered services upon notification by Corps of Engineers.

6.17.7.5. The government bears no responsibility for the condition of the demolition buildings between the Request for Proposal (RFP) and the contract or task order Notice to Proceed (NTP) date.

6.17.7.6. The Government maintains the right to salvage all materials from the building until the NTP date.

6.17.8. Assume that all demolition buildings will have no salvage value.

6.17.9. Do not assume that any building within the project footprint can be an administrative or storage building. If a building is missing structural components (windows, doors, etc), equipment (commodes, sinks, HVAC units, etc) or utilities (electricity, water, natural gas, fuel oil), it is the Contractor’s responsibility to restore these components to make the building habitable for their use.

6.17.10. DPW will notify NEC to disconnect government telephone and CATV service to buildings.

6.17.11. DPW will notify CENTURYLINK / Time Warner to disconnect privately owned telephone and CATV service to buildings.

6.17.12. Fort Bragg DPW charges three hundred dollars ($300.00) per building to disconnect utilities.

6.17.13. Fill depressions caused by the removal of demolished materials such as building foundations, pavements, sidewalks, utility lines and pad, etc., to grade, compacted per soil compaction requirements, and slope to drain towards the nearest appropriate structural stormwater management measure.

6.17.14. If fuel contaminated soils are found during the demolition or cut/fill operations, cease work immediately and notify either the Contracting Officer representative or the Contracting Officer for resolution that can include removal of contaminated soil, filling and capping area with clean, uncontaminated soil.

6.17.15. Asbestos/Hazardous Material Removal

6.17.15.1. The Contracting Officer representative will provide copies of all asbestos inspection reports, permits and disposal documents and Asbestos Removal, Transportation, and Disposal Documentation Forms to the ECB Asbestos Program Manager. North Carolina accredited personnel must perform all asbestos activities.

6.17.15.2. Dispose of all abated ACM in accordance with all Federal, State, and local regulations at the Fort Bragg Landfill on LaMont Road.

6.17.15.3. If asbestos/ lead based paint/ hazardous materials are positively identified during building or site demolition, cease work immediately and notify either the Contracting Officer representative or the Contracting Officer for resolution.

6.17.16. Utility Demolition

6.17.16.1. Coordinate with the privatized electrical company (Sandhills Utilities Services), privatized water/sewer company (Old North Utility Service), Directorate of Information Management, and Directorate of Public Works during design phase and before construction.

6.17.16.2. Completely remove and cap existing utilities located beneath new building footprints (if abandoned) or reroute if utilities are being used by existing buildings. Coordinate demolition of existing utilities serving occupied buildings with construction of new utilities so that utilities to occupied buildings remain in service at all times.

6.17.17. AST/UST Demolition

6.17.17.1. The project area may be located in a UNKNOWN contaminated area. Typical contamination constituents are from former heating oil and diesel underground storage tanks (USTs). Other sources of soil and groundwater contamination are old unlined dump sites and aboveground storage tank (AST) spill sites.

6.17.17.2. The location of USTs removed by others is provided to the Contractor as "Information Only", and may not be complete. If an unknown underground storage tank is discovered during construction, please adhere to Appendix MM. If an unknown tank meets the criteria for a Differing Site Condition under said contract clause, the clause provides an equitable adjustment for increased costs and/or delays associated with discovery and removal.

6.17.17.3. Remove and dispose of Underground Storage Tanks (UST) identified as “closed in place”. Remove and dispose of tanks and all remaining appurtenances, preferably, at a recycling center.

6.17.17.4. Fort Bragg requires that all tanks have a closure report stating the size, condition, and final disposition of the tank.

6.17.17.5. Non-leaking heating tanks are not regulated by the State of North Carolina. However, should it be discovered that there were leaks or that free product is present, complete and submit to the Contracting Officer a closure report that is in accordance with North Carolina regulations.

6.17.17.6. Although the Government will furnish all site investigations and reports documenting project area contamination, the possibility exists that soils with previously-unknown contamination may be discovered. Appendix MME addresses this situation.

6.17.17.7. Pump out and dispose of any free product/sediment that is in the tank and remove up to 140 cubic yards of contaminated soil per UST. All fill must be clean and replaced to grade. Clean fill is defined as any soil removed from the excavation that is less than 10 pap (North Carolina UST action level).

6.17.17.8. Where applicable, remove Above Ground Storage Tanks (AST) and deliver to DPW for re-issue. Contact DPW to arrange for removal of any fuel that may be remaining in the tank. Render the tank safely inert for explosive hazard prior to removal. Address inerting and moving procedures as an Appendix in the Accident Prevention Plan. Up to 10 cubic yards of contaminated soil can be removed from an AST site.

6.17.17.9. Dispose of all contaminated soils and contaminated wash waters at a licensed facility.

6.17.17.10. Remove all contaminated soils and wash waters within 15 days of stockpiling.

6.17.17.11. Secure contaminated soils and prevent run-off by adequate containment practices. The Contractor is responsible for any surface contamination caused by inadequate site protection.

6.17.17.12. Provide Disposal receipts to the Contracting Officer Representative within 10 days of removal from the site.

6.17.18. Demolition Material Disposal. Contractor See Appendix CC for information on disposing of demolition materials in Fort Bragg’s Landfill.

6.18. ADDITIONAL FACILITIES

[Not Supplied - PS_AdditionalFacilitiies : ADDITIONAL_FACILITIES]

End of Section 01 10 00.W912HN-09-X-5618

SECTION 01 32 01.00 10
PROJECT SCHEDULE

1.0 GENERAL

1.1. REFERENCES

1.2. QUALIFICATION

2.0 PRODUCTS (NOT APPLICABLE)

3.0 EXECUTION

3.1. GENERAL REQUIREMENTS

3.2. BASIS FOR PAYMENT AND COST LOADING

3.3. PROJECT SCHEDULE DETAILED REQUIREMENTS

3.4. PROJECT SCHEDULE SUBMISSIONS

3.5. SUBMISSION REQUIREMENTS

3.6. PERIODIC SCHEDULE UPDATE MEETINGS

3.7. REQUESTS FOR TIME EXTENSIONS

3.8. DIRECTED CHANGES

3.9. WEEKLY PROGRESS MEETINGS

3.10. OWNERSHIP OF FLOAT

3.11. TRANSFER OF SCHEDULE DATA INTO RMS/QCS

1.0 GENERAL

1.1. REFERENCES

The publications listed below form a part of this specification to the extent referenced. The publications are referred to within the text by the basic designation only.

U.S. ARMY CORPS OF ENGINEERS (USACE) ER 1-1-11 (1995) Progress, Schedules, and Network Analysis Systems

ECB 2005-10 (2005) Scheduling Requirements for Testing of Mechanical Systems in Construction

(Both are available through the Publications page of the US Army Corps of Engineers TECHINFO Website at http://www.hnd.usace.army.mil/techinfo/. See link for Engineer Regulation ER 1-1-11).

1.2. QUALIFICATIONS

Designate an authorized representative who shall be responsible for the preparation of the schedule and all required updating (statusing) and preparation of reports. The authorized representative shall be experienced in electronic scheduling (has developed, created, and maintained) at least 2 projects similar in nature to this project and shall be experienced in the use of the scheduling software that meets the requirements of this specification.

1.3. SUBMITTALS

Government approval is required for submittals with a "G" designation. Submit the following in accordance with Section 01 33 00 SUBMITTAL PROCEDURES:

SD-01 Preconstruction Submittals

Project Schedule and required updates thereto: G

2.0 PRODUCTS (Not Applicable)

3.0 EXECUTION

3.1. GENERAL REQUIREMENTS

3.1.1. Submit a project schedule pursuant to Contract Clause, SCHEDULE FOR CONSTRUCTION CONTRACTS and as specified herein for approval, showing the sequence in which the Contractor proposes to perform the work and dates on which the Contractor contemplates starting and completing all schedule activities. The scheduling of the entire project, including the design and construction sequences is required. Contractor management personnel shall actively participate in its development. Designers, subcontractors and suppliers working on the project shall also contribute in developing an accurate project schedule. The schedule must be a forward planning as well as a project monitoring tool.

3.1.2. Approved Project Schedule. The approved project schedule shall be used to measure the progress of the work and to aid in evaluating requests for excusable time extensions. The schedule shall be cost loaded and activity coded as specified herein. The schedule will provide the basis for all progress payments. If the Contractor fails to submit any schedule within the time prescribed, the Contracting Officer may withhold approval of progress payments until the Contractor submits the required schedule

3.1.3. Schedule Status Report. Status the schedule on at least a monthly basis, as specified herein. If in the opinion of the Contracting Officer, the Contractor falls behind the approved schedule, the Contractor shall take steps necessary to improve its progress including those that may be required by the

Contracting Officer, without additional cost to the Government. In this circumstance, the Contracting Officer may require the Contractor to increase the number of shifts, overtime operations, days of work, and/or the amount of construction plant, and to submit for approval any supplementary schedule or schedules as the Contracting Officer deems necessary to demonstrate how the approved rate of progress will be regained. See paragraph 3.7.4.

3.1.4. Default Terms. Failure of the Contractor to comply with the requirements of the Contracting Officer shall be grounds for a determination by the Contracting Officer that the Contractor is not prosecuting the work with sufficient diligence to ensure completion within the time specified in the contract. Upon making this determination, the Contracting Officer may terminate the Contractor's right to proceed with the work, or any separable part of it, in accordance with the default terms of the contract.

3.2. BASIS FOR PAYMENT AND COST LOADING

The schedule shall be the basis for determining contract earnings during each update period and therefore the amount of each progress payment. Lack of an approved schedule update or qualified scheduling personnel will result in an inability of the Contracting Officer to evaluate contract earned value for the purposes of payment. Failure of the Contractor to provide all information, as specified herein will result in the disapproval of the preliminary, initial and subsequent schedule updates. In the event schedule revisions are directed by the Contracting Officer and those revisions have not been included in subsequent revisions or updates, the Contracting Officer may hold retainage up to the maximum allowed by contract, each payment period, until such revisions to the project schedule have been made. Activity cost loading shall be reasonable as determined by the Contracting Officer. The aggregate value of all activities coded to a contract CLIN as specified herein shall equal the value of the CLIN on the Schedule.

3.3. PROJECT SCHEDULE DETAILED REQUIREMENTS

The computer software system utilized to produce and update the project schedule shall be capable of meeting all requirements of this specification. Failure of the Contractor to meet the requirements of this specification will result in the disapproval of the schedule.

3.3.1. Use of the Critical Path Method

Use the Critical Path Method (CPM) of network calculation to generate the project schedule. Prepare the project schedule using the Precedence Diagram Method (PDM).

3.3.2. Level of Detail Required

Develop the project schedule to an appropriate level of detail. Failure to develop the project schedule to an appropriate level of detail, as determined by the Contracting Officer, will result in its disapproval. The Contracting Officer will consider, but is not limited to, the following characteristics and requirements to determine appropriate level of detail:

3.3.2.1. Activity Durations

Reasonable activity durations are those that allow the progress of ongoing activities to be accurately determined between update periods. Less than 2 percent of all non-procurement activities shall have Original Durations (OD) greater than 20 work days or 30 calendar days. Procurement activities are defined herein.

3.3.2.2. Design and Permit Activities

Include design and permit activities, including necessary conferences and follow-up actions and design package submission activities. Include the design schedule in the project schedule, showing the sequence of events involved in carrying out the project design tasks within the specific contract period.

This shall be at a detailed level of scheduling sufficient to identify all major design tasks, including those that control the flow of work. Include review and correction periods associated with each item.

3.3.2.3. Procurement Activities

Include activities associated with the submittal, approval, procurement, fabrication and delivery of long lead materials, equipment, fabricated assemblies and supplies. Long lead procurement activities are those with an anticipated procurement sequence of over 90 calendar days. A typical procurement sequence includes the string of activities: submit, approve/review, procure, fabricate, and deliver.

3.3.2.4. Mandatory Tasks

Include and properly schedule the following tasks (See also the Sample Preliminary Submittal Register Input Form):

(a) Submission, review and acceptance of design packages, including BIM

(b) Submission of mechanical/electrical/information systems layout drawings

(c) Submission and approval of O & M manuals

(d) Submission and approval of as-built drawings

(e) Submission and approval of 1354 data and installed equipment lists

(f) Submission and approval of testing and air balance (TAB)

(g) Submission of TAB specialist design review report

(h) Submission and approval of fire protection specialist

(i) Submission and approval of testing and balancing of HVAC plus commissioning plans and data. Develop the schedule logic associated with testing and commissioning of mechanical systems to a level of detail consistent with the contract commissioning requirements as well as ECB 2005-10

(j) Air and water balancing

(k) HVAC commissioning

(l) Controls testing plan submission

(m) Controls testing

(n) Performance Verification testing

(o) Other systems testing, if required

(p) Contractor's pre-final inspection

(q) Correction of punch list from Contractor's pre-final inspection

(r) Government's pre-final inspection

(s) Correction of punch list from Government's pre-final inspection

(t) Final Inspection

3.3.2.5. Government Activities. Show Government and other agency activities that could impact progress. These activities include but are not limited to: approvals, design reviews, review conferences, release for construction of design package(s), environmental permit approvals by State regulators, inspections, utility tie-ins, Government Furnished Property/Equipment (GFP) and phasing requirements, if any.

3.3.2.6. Activity Responsibility Coding (RESP)

Assign Responsibility Code for all activities to the Prime Contractor, Subcontractor or Government agency responsible for performing the activity. Activities coded with a Government Responsibility code include, but are not limited to: Government approvals, Government design reviews, environmental permit approvals by State regulators, Government Furnished Equipment (GFE) and authorization to proceed with phasing requirements. Code all activities not coded with a Government Responsibility Code to the Prime Contractor or Subcontractor responsible to perform the work. Activities shall not have more than one Responsibility Code. Examples of acceptable activity code values are: DOR (for the designer of record); ELEC (for the electrical subcontractor); MECH (for the mechanical subcontractor); and GOVT (for USACE). Unacceptable code values are abbreviations of the names of subcontractors.

3.3.2.7. Activity Work Area Coding (AREA)

Assign Work Area code to activities based upon the work area in which the activity occurs. Define work areas based on resource constraints or space constraints that would preclude a resource, such as a particular trade or craft work crew from working in more than one work area at a time due to restraints on resources or space. Examples of Work Area Coding include different areas within a floor of a building, different floors within a building, and different buildings within a complex of buildings. Activities shall not have more than one Work Area Code. Not all activities are required to be Work Area coded. A lack of Work Area coding will indicate the activity is not resource or space constrained.

3.3.2.8. Contract Changes/Requests for Equitable Adjustment (REA) Coding (MODF)

Assign Activity code to any activity or sequence of activities added to the schedule as a result of a Contract Modification, when approved by Contracting Officer, with a Contract Changes/REA Code. Key all Code values to the Government's modification numbering system. Any activity or sequence of activities added to the schedule as a result of alleged constructive changes made by the Government may be added to a copy of the current schedule, subject to the approval of the Contracting Officer. Assign Activity codes for these activities with a Contract Changes/REA Code. Key the code values to the Contractor's numbering system. Approval to add these activities does not necessarily mean the Government accepts responsibility and therefore liability for such activities and any associated impacts to the schedule, but rather the Government recognizes such activities are appropriately added to the schedule for the purposes of maintaining a realistic and meaningful schedule. Such activities shall not be Responsibility Coded to the Government unless approved. An activity shall not have more than one Contract Changes/REA Code

3.3.2.9. Contract Line Item (CLIN) Coding (BIDI)

Code all activities to the CLIN on the Contract Line Item Schedule to which the activity belongs. An activity shall not contain more than one CLIN Item Code. CLIN Item code all activities, even when an activity is not cost loaded.

3.3.2.10. Phase of Work Coding (PHAS)

Assign Phase of Work Code to all activities, based upon the phase of work in which the activity occurs. Code activities to either a Design Phase or a Construction Phase. Code fast track design and construction phases proposed by the Contractor to allow filtering and organizing the schedule by fast track design and construction packages. If the contract specifies construction phasing with separately defined performance periods, identify a Construction Phase Code to allow filtering and organizing the schedule accordingly. Each activity shall have only one Phase of Work code.

3.3.2.11. Category of Work Coding (CATW)

Assign Category of Work code to all Activities based upon the category of work which the activity belongs. Category of Work Code must include, but is not limited to: Design, Design Submittal, design reviews, review conferences, Construction Submittal, Approvals (if any), Acceptance, Procurement,

Fabrication, Delivery, Weather Sensitive Installation, Non-Weather Sensitive Installation, Start Up, Test, and Turnover. Assign a Category of Work code to each activity. Each activity shall have only one Category of Work Code.

3.3.2.12. Definable Features of Work Coding (FOW1, FOW2, FOW3)

Assign a Definable Feature of Work Code to appropriate activities based on the definable feature of work to which the activity belongs. Definable Feature of Work is defined in Specification Section 01 45 04.00 10, Contractor Quality Control. An activity shall not have more than one Definable Feature of Work Code. Not all activities are required to be Definable Feature of Work Coded.

3.3.3. Scheduled Project Completion and Activity Calendars

The schedule interval shall extend from NTP date to the required contract completion date. The contract completion activity (End Project) shall finish based on the required contract duration, as adjusted for any approved contract time extensions. The first scheduled work period shall be the day after NTP is acknowledged by the Contractor. Schedule activities on a calendar to which the activity logically belongs. Activities may be assigned to a 7 day calendar when the contract assigns calendar day durations for the activity such as a Government Acceptance activity. If the Contractor intends to perform physical work less than seven days per week, schedule the associated activities on a calendar with non-work periods identified including weekends and holidays. Assign the Category of Work Code - Weather Sensitive Installation to those activities that are weather sensitive. Original durations must account for anticipated normal adverse weather. The Government will interpret all work periods not identified as non-work periods on each calendar as meaning the Contractor intends to perform work during those periods.

3.3.3.1. Project Start Date

The schedule shall start no earlier than the date on which the NTP was acknowledged. Include as the first activity in the project schedule an activity called "Start Project" or “NTP”. The "Start Project" activity shall have an "ES" constraint date equal to the date that the NTP was acknowledged, with a zero day duration.

3.3.3.2. Schedule Constraints and Open Ended Logic

Constrain completion of the last activity in the schedule by the contract completion date. Schedule calculations shall result in negative float when the calculated early finish date of the last activity is later than the contract completion date. Include as the last activity in the project schedule an activity called "End Project". The "End Project" activity shall have an "LF" constraint date equal to the contract completion date for the project, and with a zero day duration or by using the “project must finish by” date in the scheduling software. The schedule shall have no constrained dates other than those specified in the contract. The use of artificial float constraints such as “zero fee float” or “zero total float” are typically prohibited. There shall only be 2 open ended activities: Start Project (or NTP) with no predecessor logic and End Project with no successor logic.

3.3.3.3. Early Project Completion

In the event the Preliminary or Initial project schedule calculates an early completion date of the last activity prior to the contract completion date, the Contractor shall identify those activities that it intends to accelerate and/or those activities that are scheduled in parallel to support the Contractor's "early" completion. The last activity shall have a late finish constraint equal to the contract completion date and the schedule will calculate positive float. The Government will not approve an early completion schedule with zero float on the longest path. The Government is under no obligation to accelerate activities for which it is responsible to support a proposed early contract completion.

3.3.4. Interim Completion Dates

Constrain contractually specified interim completion dates to show negative float when the calculated early finish date of the last activity in that phase is later than the specified interim completion date.

3.3.4.1. Start Phase

Include as the first activity for a project phase an activity called "Start Phase X" where "X" refers to the phase of work. The “Start Phase X" activity shall have an "ES" constraint date equal to the date on which the NTP was acknowledged, and a zero day duration.

3.3.4.2. End Phase

Include as the last activity for a project phase an activity called "End Phase X" where "X" refers to the phase of work. The "End Phase X" activity shall have an "LF" constraint date equal to the specified completion date for that phase and a zero day duration.

3.3.4.3. Phase “X” Hammock

Include a hammock type activity for each project phase called "Phase X" where "X" refers to the phase of work. The "Phase X" hammock activity shall be logically tied to the earliest and latest activities in the phase.

3.3.5. Default Progress Data Disallowed

Do not automatically update Actual Start and Finish dates with default mechanisms that may be included in the scheduling software. Activity Actual Start (AS) and Actual Finish (AF) dates assigned during the updating process shall match those dates provided from Contractor Quality Control Reports. Failure of the Contractor to document the AS and AF dates on the Daily Quality Control report for every in-progress or completed activity, and failure to ensure that the data contained on the Daily Quality Control reports is the sole basis for schedule updating shall result in the disapproval of the Contractor's updated schedule and the inability of the Contracting Officer to evaluate Contractor progress for payment purposes. Updating of the percent complete and the remaining duration of any activity shall be independent functions. Disable program features which calculate one of these parameters from the other.

3.3.6. Out-of-Sequence Progress

Activities that have progressed before all preceding logic has been satisfied (Out-of-Sequence Progress) will be allowed only on a case-by-case basis subject to approval by the Contracting Officer. Propose logic corrections to eliminate all out of sequence progress or justify not changing the sequencing for approval prior to submitting an updated project schedule..

3.3.7. Negative Lags and Start to Finish Relationships

Lag durations contained in the project schedule shall not have a negative value. Do not use Start to Finish relationships (SF).

3.3.8. Calculation Mode

Schedule calculations shall retain the logic between predecessors and successors even when the successor activity starts and the predecessor activity has not finished. Software features that in effect sever the tie between predecessor and successor activities when the successor has started and the predecessor logic is not satisfied (“progress override”) will not be allowed.

3.3.9. Milestones

Include milestone activities for each significant project event including but not limited to: milestone activities for each fast track design package released for construction; design complete; foundation/substructure construction complete; superstructure construction complete; building dry-in or enclosure complete to allow the initiation of finish activities; permanent power complete; and building systems commissioning complete.

3.3.10. Use of Primavera “P6”

If P6 is being used, the following settings are mandatory in the Preliminary Project Schedule, Initial Project Schedule and all schedule submissions to the Government:

3.3.10.1. Activity Codes shall be Project Level not Global or EPS level.

3.3.10.2. Calendars shall be Project Level not Global or Resource level.

3.3.10.3. Set Activity Duration Types to "Fixed Duration & Units".

3.3.10.4. Set Percent Complete Types to "Physical".

3.3.10.5. Use Default Time Period Admin Preferences "8.0 hr/day, 40 hr/week, 172 hr/month, 2000 hr/year". Set Calendar Work Hours/Day to 8.0 Hour days. This is not to mandate the Contractor’s work week. Alternate workweeks may be set up in “Calendar Settings”.

3.3.10.6. Set Schedule Option for defining Critical Activities "Longest Path".

3.3.10.7. Set Schedule Option for defining progressed activities "Retained Logic".

3.3.10.8. Set up Cost loading a single lump sum Resource. The Price/Unit shall be $1/hr, Default Units/Time shall be "8h/d", and select settings "Auto Compute Actuals" and "Calculate costs from units".

3.3.10.9. Activity ID's shall not exceed 10 characters.

3.3.10.10. Activity Names shall have the most defining and detailed description within the first 30 characters.

3.4. PROJECT SCHEDULE SUBMISSIONS

Provide the submissions as described below. The data CD, reports, and network diagrams required for each submission are contained in paragraph SUBMISSION REQUIREMENTS.

3.4.1. Preliminary Project Schedule Submission

Submit the Preliminary Project Schedule, defining the Contractor's planned operations for the first 90 calendar days for approval within 15 calendar days after the NTP is acknowledged. The approved Preliminary Project Schedule will be used for payment purposes not to exceed 90 calendar days after NTP. Completely cost load the Preliminary Project Schedule to balance the contract award CLINS shown on the Price Schedule. Detail it for the first 90 calendar days. It may be summary in nature for the remaining performance period. It must be early start and late finish constrained and logically tied as previously specified. The Preliminary Project Schedule forms the basis for the Initial Project Schedule specified herein and must include all of the required Plan and Program preparations, submissions and approvals identified in the contract (for example, Quality Control Plan, Safety Plan, and Environmental Protection Plan) as well as design activities, the planned submissions of all early design packages, permitting activities, design review conference activities and other non-construction activities intended to occur within the first 90 calendar days. Schedule any construction activities planned for the first 90 calendar days after NTP. Constrain planned construction activities by Government acceptance of the

associated design package(s) and all other specified Program and Plan approvals. Activity code any activities that are summary in nature after the first 90 calendar days with Responsibility Code (RESP) and Feature of Work code (FOW1, FOW2, FOW3)

3.4.2. Initial Project Schedule Submission

Submit the Initial Project Schedule for approval within 42 calendar days after NTP. The schedule shall demonstrate a reasonable and realistic sequence of activities which represent all work through the entire contract performance period. The Initial Schedule shall be at a reasonable level of detail as determined by the Contracting Officer. Include detailed design and permitting activities, including but not limited to identification of individual design packages, design submission, reviews and conferences; permit submissions and any required Government actions; and long lead procurement activities required prior to design completion. The Initial Project Schedule shall include the entire construction sequence and all fast track construction activities, with as much detail as is known at the time but, as a minimum, shall include all construction start and completion milestone activities, and detailed construction activities through the dry-in milestone, including all activity coding and cost loading. Include the remaining construction, including cost loading, but it may be scheduled summary in nature. As the design proceeds and design packages are developed, fully detail the remaining construction activities concurrent with the monthly schedule updating process. Constrain construction activities by Government acceptance of associated designs. When the design is complete, incorporate into the then approved schedule update all remaining detailed construction activities that are planned to occur after the dry-in milestone.

3.4.3. Design Package Schedule Submission:

With each design package submitted to the Government, submit a frag-net schedule extracted from the then current Preliminary, Initial or Updated schedule which covers the activities associated with that Design Package including construction, procurement and permitting activities.

3.4.4. Periodic Schedule Updates

Based on the result of the meeting specified in PERIODIC SCHEDULE UPDATE MEETINGS, submit periodic schedule updates. These submissions shall enable the Contracting Officer to assess Contractor's progress. If the Contractor fails or refuses to furnish the information and project schedule data, which in the judgment of the Contracting Officer or authorized representative is necessary for verifying the Contractor's progress, the Contractor shall be deemed not to have provided an estimate upon which progress payment may be made. Update the schedule to include detailed lower WBS activities procurement and construction activities as the design progresses, but not later than the submission of the final, un-reviewed design submission for each separate design package. The Contracting Officer may require submission of detailed schedule activities for any distinct construction that is started prior to submission of a final design submission, if such activity is authorized.

3.4.5. Standard Activity Coding Dictionary

Use the activity coding structure defined in the Standard Data Exchange Format (SDEF) in ER 1-1-11, Appendix A. This exact structure is mandatory, even if some fields are not used. A template SDEF compatible schedule backup file (sdef.prx) is available on the QCS website: http://rms.usace.army.mil .

The SDEF format is as follows:

Field	Activity Code	Length	Description
1	WRKP	3	Workers per Day
2	RESP	4	Responsible Party (e.g. GC, subcontractor, USACE)

3	AREA	4	Area of Work
4	MODF	6	Modification or REA number
5	BIDI	6	Bid Item (CLIN)
6	PHAS	2	Phase of Work
7	CATW	1	Category of Work
8	FOW1	10	Feature of Work (used up to 10 characters in length)
9	FOW2	10	Feature of Work (used up to 20 characters in length)
10	FOW3	10	Feature of Work (used up to 30 characters in length)

3.5. SUBMISSION REQUIREMENTS

Submit the following items for the Preliminary Schedule, Initial Schedule, and every Periodic Schedule Update throughout the life of the project:

3.5.1. Data CD's

Provide two sets of data CD's containing the project schedule in the backup format. Each CD shall also contain all previous update backup files. File medium shall be CD. Label each CD, indicating the type of schedule (Preliminary, Initial, Update), full contract number, Data Date and file names. Each schedule shall have a unique file name as determined by the Contractor.

3.5.2. Narrative Report

Provide a Narrative Report with the Preliminary, Initial, and each Periodic Update of the project schedule, as the basis of the progress payment request. The Narrative Report shall include: a description of activities along the 2 most critical paths where the total float is less than or equal to 20 work days, a description of current and anticipated problem areas or delaying factors and their impact, and an explanation of corrective actions taken or required to be taken. The narrative report is expected to communicate to the Government, the Contractor's thorough analysis of the schedule output and its plans to compensate for any problems, either current or potential, which are revealed through its analysis. Identify and explain why any activities that, based their calculated late dates, should have either started or finished during the update period but did not.

3.5.3. Approved Changes Verification

Include only those project schedule changes in the schedule submission that have been previously approved by the Contracting Officer. The Narrative Report shall specifically reference, on an activity by activity basis, all changes made since the previous period and relate each change to documented, approved schedule changes.

3.5.4. Schedule Reports

The format, filtering, organizing and sorting for each schedule report shall be as directed by the Contracting Officer. Typically reports shall contain: Activity Numbers, Activity Description, Original Duration, Remaining Duration, Early Start Date, Early Finish Date, Late Start Date, Late Finish Date Total Float, Actual Start Date, Actual Finish Date, and Percent Complete. The following lists typical reports that will be requested. One or all of these reports may be requested for each schedule submission.

3.5.4.1. Activity Report

A list of all activities sorted according to activity number.

3.5.4.2. Logic Report

A list of detailed predecessor and successor activities for every activity in ascending order sorted by activity number.

3.5.4.3. Total Float Report

A list of all incomplete activities sorted in ascending order of total float. List activities which have the same amount of total float in ascending order of Early Start Dates. Do not show completed activities on this report.

3.5.4.4. Earnings Report by CLIN

A compilation of the Contractor's Total Earnings on the project from the NTP to the data date. This report shall reflect the earnings of specific activities based on the agreements made in the schedule update meeting defined herein. Provided that the Contractor has provided a complete schedule update, this report shall serve as the basis of determining progress payments. Group activities by CLIN Item number and sort by activity number. This report shall: sum all activities coded to a particular CLIN and provide a CLIN Item percent earned value; and complete and sum CLIN items to provide a total project percent complete. The printed report shall contain, for each activity: the Activity Number, Activity Description, Original Budgeted Amount, Quantity to Date, Percent Complete (based on cost), and Earnings to Date.

3.5.5. Network Diagram

The network diagram is required for the Preliminary, Initial and Periodic Updates. Depict and display the order and interdependence of activities and the sequence in which the work is to be accomplished. The Contracting Officer will use, but is not limited to, the following conditions to review compliance with this paragraph:

3.5.5.1. Continuous Flow

Show a continuous flow from left to right with no arrows from right to left. Show the activity number, description, duration, and estimated earned value on the diagram.

3.5.5.2. Project Milestone Dates

Show dates on the diagram for start of project, any contract required interim completion dates, and contract completion dates.

3.5.5.3. Critical Path

Clearly show the critical path.

3.5.5.4. Banding

Organize activities as directed to assist in the understanding of the activity sequence. Typically, this flow will group activities by category of work, work area and/or responsibility.

3.5.5.5. S-Curves

Earnings curves showing projected early and late earnings and earnings to date.

3.6. PERIODIC SCHEDULE UPDATE MEETINGS

Conduct periodic schedule update meetings for the purposes of reviewing the Contractor's proposed out of sequence corrections, determining causes for delay, correcting logic, maintaining schedule accuracy and determining earned value. Meetings shall occur at least monthly within five days of the proposed schedule data date and after the Contractor has updated the schedule with Government concurrence respecting actual start dates, actual finish dates, remaining durations and percent complete for each activity it intend to status. Match the actual start and finish dates with the dates exported, as described in paragraph 3.3.5. Provide a computer with the scheduling software loaded and a projector during the meeting which allows all meeting participants to view the proposed schedule update during the meeting. The meeting and resultant approvable schedule update shall be a condition precedent to a formal submission of the update as described in SUBMISSION REQUIREMENTS and to the submission of an invoice for payment. The meeting will be a working interactive exchange which will allow the Government and the Contractor the opportunity review the updated schedule on a real time and interactive basis. The Contractor's authorized scheduling representative will organize, sort, filter and schedule the update as requested by the Government. The meeting will last no longer than 8 hours. A rough draft of the proposed activity logic corrections and narrative report shall be provided to the Government 48 hours in advance of the meeting. The Contractor's Project Manager and Authorized Scheduler shall attend the meeting with the Authorized Representative of the Contracting Officer.

3.6.1. Update Submission Following Progress Meeting

Submit a complete update of the project schedule containing all approved progress, revisions, and adjustments, pursuant to paragraph SUBMISSION REQUIREMENTS not later than 4 working days after the periodic schedule update meeting, reflecting only those changes made during the previous update meeting.

3.6.2. Status of Activities

Update statusing information, including Actual Start Dates (AS), Actual Finish Dates (AF), Remaining Durations (RD) and Percent Complete shall be subject to the approval of the Government prior to the meeting. As a minimum, address the following items on an activity by activity basis during each progress meeting:

3.6.2.1. Actual Start and Finish Dates

Accurately status the AS and/or AF dates for each activity currently in-progress or completed since the last update The Government may allow an AF date to be assigned with the percent complete less than 100% to account for the value of work remaining but not restraining successor activities. Only assign AS dates when actual progress occurs on an activity.

3.6.2.2. Remaining Duration

Update the estimated RD for all incomplete activities independent of Percent Complete. Remaining durations may exceed the activity OD or may exceed the activity's prior update RD if the Government considers the current OD or RD to be understated based on current progress, insufficient work crews actually manning the job, unrealistic OD or deficiencies that must be corrected that restrain successor activities.

3.6.2.3. Percent Complete

Update the percent complete for each activity started based on the realistic assessment of earned value. Activities which are complete but for remaining minor punch list work and which do not restrain the initiation of successor activities may be statused 100 percent complete. To allow for proper schedule management, cost load the correction of punch list from Government pre-final inspection activity(ies) not less than 1% of the total contract value, which activity(ies) may be declared 100 percent complete upon completion and correction of all punch list work identified during Government pre-final inspection(s).

3.6.2.4. Logic Changes

Specifically identify and discuss all logic changes pertaining to NTP on change orders, change orders to be incorporated into the schedule, contractor proposed changes in work sequence, corrections to schedule logic for out-of-sequence progress, and other changes that have been made pursuant to contract provisions. The Government will only approve logic revisions for the purpose of keeping the schedule valid in terms of its usefulness in calculating a realistic completion date, correcting erroneous logic ties, and accurately sequencing the work.

3.6.2.5. Other Changes

Other changes required due to delays in completion of any activity or group of activities include: 1) delays beyond the Contractor's control, such as strikes and unusual weather. 2) delays encountered due to submittals, Government Activities, deliveries or work stoppages which make re-planning the work necessary. 3) Changes required to correct a schedule that does not represent the actual or planned prosecution and progress of the work.

3.7. REQUESTS FOR TIME EXTENSIONS

In the event the Contractor believes it is entitled to an extension of the contract performance period, completion date, or any interim milestone date, furnish the following for a determination by the Contracting Officer: justification, project schedule data, and supporting evidence as the Contracting Officer may deem necessary. Submission of proof of excusable delay, based on revised activity logic, duration, and costs (updated to the specific date that the delay occurred) is a condition precedent to any approvals by the Government. In response to each Request For Proposal issued by the Government, the Contractor shall submit a schedule impact analysis demonstrating whether or not the change contemplated by the Government impacts the critical path.

3.7.1. Justification of Delay

The project schedule shall clearly display that the Contractor has used, in full, all the float time available for the work involved with its request. The Contracting Officer's determination as to the number of allowable days of contract extension shall be based upon the project schedule updates in effect for the time period in question, and other factual information.

Actual delays that are found to be caused by the Contractor's own actions, which result in a calculated schedule delay, will not be a cause for an extension to the performance period, completion date, or any interim milestone date.

3.7.2. Submission Requirements

Submit a justification for each request for a change in the contract completion date of less than 2 weeks based upon the most recent schedule update at the time of the NTP or constructive direction issued for the change. Such a request shall be in accordance with the requirements of other appropriate Contract Clauses and shall include, as a minimum:

3.7.2.1. A list of affected activities, with their associated project schedule activity number.

3.7.2.2. A brief explanation of the causes of the change

3.7.2.3. An analysis of the overall impact of the changes proposed.

3.7.2.4. A sub-network of the affected area

Identify activities impacted in each justification for change by a unique activity code contained in the required data file.

3.7.3. Additional Submission Requirements

The Contracting Officer may request an interim update with revised activities for any requested time extension of over 2 weeks. Provide this disk within 4 days of the Contracting Officer's request.

3.7.4. If Progress Falls Behind the Approved Project Schedule

3.7.4.1. Should progress fall behind the approved schedule (more than 20 work days of negative float) due to Contractor generated problems, promptly provide a supplemental recovery or completion schedule that illustrates its efforts to regain time to assure a completion by the required contract completion date.

3.7.4.2. The supplemental recovery or completion schedule will not replace the original, approved schedule as the official contract schedule. Continue to update the original, approved schedule on at least a monthly basis. In addition, the Contractor and the Contracting Officer will monitor the supplemental recovery or completion schedule on at least a bi-weekly basis to determine its effect on regaining the rate of progress to assure project completion by the contractually required completion date.

3.7.4.3. Do not artificially improve progress by simply revising the schedule logic, modifying or adding constraints, or shortening future work activity durations. Resource and manpower load the supplemental recovery schedule or completion schedule with crew size and productivity for each remaining activity, indicating overtime, weekend work, and/or double shifts needed to regain the schedule, in accordance with FAR 52.236.15, without additional cost to the Government. Indicate assumptions made and the basis for any logic, constraint, or duration changes used in the creation of the supplemental recovery or completion schedule in a narrative submitted for the Contracting Officer’s approval. Any additional resources or manpower must be evident at the work site. Do not modify the official contract schedule to include these assumptions.

3.7.4.4. Failure to perform work and maintain progress in accordance with the supplemental recovery or completion schedule may result in an interim and final unsatisfactory performance rating and/or may result in corrective action by the Contracting Officer in accordance with FAR 52.236-15.

3.8. DIRECTED CHANGES

If the NTP is issued for changes prior to settlement of price and/or time, submit proposed schedule revisions to the Contracting Officer within 2 weeks of the NTP being issued. The Contracting Officer will approve proposed revisions to the schedule prior to inclusion of those changes within the project schedule. If the Contractor fails to submit the proposed revisions, the Contracting Officer may furnish the Contractor with suggested revisions to the project schedule. The Contractor shall include these revisions in the project schedule until revisions are submitted and final changes and impacts have been negotiated. If the Contractor has any objections to the revisions furnished by the Contracting Officer, advise the Contracting Officer within 2 weeks of receipt of the revisions. Regardless of the objections, the Contractor shall continue to update the schedule with the Contracting Officer's revisions until a mutual agreement in the revisions is reached. If the Contractor fails to submit alternative revisions within 2 weeks of receipt of the Contracting Officer's proposed revisions, the Contractor will be deemed to have concurred with the

Contracting Officer's proposed revisions. The proposed revisions will then be the basis for an equitable adjustment for performance of the work.

3.9. WEEKLY PROGRESS MEETINGS

3.9.1. The Government and the Contractor shall meet weekly (or as otherwise mutually agreed to) between the meetings described in paragraph PERIODIC SCHEDULE UPDATE MEETINGS for the purpose of jointly reviewing the actual progress of the project as compared to the as planned progress and to review planned activities for the upcoming two weeks. The then current and approved schedule update shall be used for the purposes of this meeting and for the production and review of reports. The Contractor’s Project Manager and the Authorized Representative of the Contracting Officer shall attend. The weekly progress meeting will address the status of RFI’s, RFP’s and Submittals.

3.9.2. Provide a bar chart produced by the scheduling software, organized by Total Float and Sorted by Early Start Date, and a two week “look-ahead” schedule by filtering all schedule activities to show only current ongoing activities and activities schedule to start during the upcoming two weeks, organized by Work Area Code (AREA) and sorted by Early Start Date.

3.9.3. The Government and the Contractor shall jointly review the reports. If it appears that activities on the longest path(s) which are currently driving the calculated completion date (driving activities), are not progressing satisfactorily and therefore could jeopardize timely project completion, corrective action must be taken immediately. Corrective action includes but is not limited to: increasing the number of work crews; increasing the number of work shifts; increasing the number of hours worked per shift; and determining if Government responsibility coded activities require Government corrective action.

3.10. OWNERSHIP OF FLOAT

Float available in the schedule, at any time, shall not be considered for the exclusive use of either the Government or the Contractor.

3.11. TRANSFER OF SCHEDULE DATA INTO RMS/QCS

Download and upload the schedule data into the Resident Management System (RMS) prior to RMS databases being transferred to the Government and is considered to be additional supporting data in a form and detail required by the Contracting Officer pursuant to FAR 52.232-5 - Payments under Fixed-Price Construction Contracts. The receipt of a proper payment request pursuant to FAR 52.232-27 - Prompt Payment for Construction Contracts is contingent upon the Government receiving both acceptable and approvable hard copies and electronic export from QCS of the application for progress payment.

End of Section 01 32 01.00 10

SECTION 01 33 00
SUBMITTAL PROCEDURES

1.0 GENERAL

1.1. DEFINITIONS

1.2. NOT USED

1.3. SUBMITTAL CLASSIFICATION

1.4. APPROVED OR CONCURRED WITH SUBMITTALS

1.5. DISAPPROVED SUBMITTALS

1.6. WITHHOLDING OF PAYMENT

1.7. GENERAL

1.8. SUBMITTAL REGISTER

1.9. SCHEDULING

1.10. TRANSMITTAL FORM (ENG FORM 4025)

1.11. SUBMITTAL PROCEDURES

1.12. CONTROL OF SUBMITTALS

1.13. GOVERNMENT APPROVED SUBMITTALS

1.14. INFORMATION ONLY SUBMITTALS

1.15. STAMPS

1.0 GENERAL

1.1. DEFINITIONS

1.1.1. Submittal

Contract Clauses "FAR 52.236-5, Material and Workmanship," paragraph (b) and "FAR 52.236-21, Specifications and Drawings for Construction," paragraphs (d), (e), and (f) apply to all "submittals."

1.1.2. Submittal Descriptions (SD)

Submittals requirements are specified in the technical sections. Submittals are identified by SD numbers and titles as follows.

SD-01 Preconstruction Submittals

- Certificates of insurance.
- Surety bonds.
- List of proposed subcontractors.
- List of proposed products.
- Construction Progress Schedule.
- Submittal register.
- Schedule of prices.
- Accident Prevention Plan.
- Work plan.
- Quality control plan.
- Environmental protection plan.

SD-02 Shop Drawings

- Drawings, diagrams and schedules specifically prepared to illustrate some portion of the work.
- Diagrams and instructions from a manufacturer or fabricator for use in producing the product and as aids to the Contractor for integrating the product or system into the project.
- Drawings prepared by or for the Contractor to show how multiple systems and interdisciplinary work will be coordinated.

SD-03 Product Data

- Catalog cuts, illustrations, schedules, diagrams, performance charts, instructions and brochures illustrating size, physical appearance and other characteristics of materials or equipment for some portion of the work.
- Samples of warranty language when the contract requires extended product warranties.

SD-04 Samples

- Physical examples of materials, equipment or workmanship that illustrate functional and aesthetic characteristics of a material or product and establish standards by which the work can be judged.
- Color samples from the manufacturer's standard line (or custom color samples if specified) to be used in selecting or approving colors for the project.
- Field samples and mock-ups constructed on the project site establish standards by which the ensuring work can be judged. Includes assemblies or portions of assemblies that are to be incorporated into the project and those which will be removed at conclusion of the work.

SD-05 Design Data

- Calculations, mix designs, analyses or other data pertaining to a part of work.
- Design submittals, design substantiation submittals and extensions of design submittals.

SD-06 Test Reports

- Report signed by authorized official of testing laboratory that a material, product or system identical to the material, product or system to be provided has been tested in accord with specified requirements. (Testing must have been within three years of date of contract award for the project.)
- Report which includes findings of a test required to be performed by the Contractor on an actual portion of the work or prototype prepared for the project before shipment to job site.
- Report which includes finding of a test made at the job site or on sample taken from the job site, on portion of work during or after installation.
- Investigation reports.
- Daily checklists.
- Final acceptance test and operational test procedure.

SD-07 Certificates

- Statements printed on the manufacturer's letterhead and signed by responsible officials of manufacturer of product, system or material attesting that product, system or material meets specification requirements. Must be dated after award of project contract and clearly name the project.
- Document required of Contractor, or of a supplier, installer or subcontractor through Contractor, the purpose of which is to further quality of orderly progression of a portion of the work by documenting procedures, acceptability of methods or personnel qualifications.
- Confined space entry permits.
- Text of posted operating instructions.

SD-08 Manufacturer's Instructions

- Preprinted material describing installation of a product, system or material, including special notices and Material Safety Data sheets concerning impedances, hazards and safety precautions.

SD-09 Manufacturer's Field Reports

- Documentation of the testing and verification actions taken by manufacturer's representative to confirm compliance with manufacturer's standards or instructions.
- Factory test reports.

SD-10 Operation and Maintenance Data

- Data that is furnished by the manufacturer, or the system provider, to the equipment operating and maintenance personnel. This data is needed by operating and maintenance personnel for the safe and efficient operation, maintenance and repair of the item.

SD-11 Closeout Submittals

- Documentation to record compliance with technical or administrative requirements or to establish an administrative mechanism.

1.1.3. Approving Authority

Office authorized to approve submittal.

1.1.4. Work

As used in this section, on- and off-site construction required by contract documents, including labor necessary to produce submittals, construction, materials, products, equipment, and systems incorporated or to be incorporated in such construction.

1.2. NOT USED

1.3. SUBMITTAL CLASSIFICATION

Submittals are classified as follows:

1.3.1. Designer of Record Approved (DA)

1.3.1.1. Designer of Record (DOR) approval is required for all extensions of design, critical materials, equipment whose compatibility with the entire system must be checked, and other items as designated by the Contracting Officer. Within the terms of the Contract Clause entitled "Specifications and Drawings for Construction", they are considered to be "shop drawings". Provide the Government the number of copies designated hereinafter of all DOR approved submittals, after the DOR has taken appropriate action. The DOR shall ensure that submittals conform to the Solicitation, the Accepted Proposal and the completed design, however see below for those submittals proposing a deviation to the contract or a substitution of a material, system, or piece of equipment that was identified by manufacturer, brand name or model description in the accepted contract proposal.

1.3.1.2. The DOR shall ensure that the submittals comply with all applicable Buy American Act and Trade Agreement Act clauses in the contract. The DOR may confer with the Contracting Officer's Representative for advice and interpretation of those clauses, as necessary.

1.3.1.3. The Government may, but is not required to, review any or all DOR approved submittals for conformance to the solicitation, accepted proposal and the completed design. Except for submittals designated as deviating from the Solicitation, the Accepted Proposal or completed design, the Contractor may proceed with acquisition and installation upon DOR approval. Government Approved (GA)

1.3.2. Government Approved (GA)

Government approval is required for any item specifically designated as requiring Government approval in the Solicitation, for internal and external color finish selections and other items as designated by the Contracting Officer. Within the terms of the Contract Clause entitled "Specifications and Drawings for Construction," they are considered to be "shop drawings."

1.3.3. Government Conformance Review of Design (CR)

The Government will review all intermediate and final design submittals for conformance with the technical requirements of the solicitation. Section 01 33 16 **DESIGN AFTER AWARD** covers the design submittal and review process in detail. Review will be only for conformance with the applicable codes, standards and contract requirements. Design data includes the design documents described in Section 01 33 16 **DESIGN AFTER AWARD**. Generally, design submittals should be identified as SD-05 Design Data submittals.

1.3.4. Designer of Record Approved/Government Conformance Review (DA/CR)

1.3.4.1. Deviations to the Accepted Design. Designer of Record approval and the Government’s concurrence are required for any proposed deviation from the accepted design which still complies with the contract (the Solicitation and Accepted Proposal) before the Contractor is authorized to proceed with material acquisition or installation. Within the terms of the Contract Clause entitled "Specifications and Drawings for Construction", they are considered to be "shop drawings.” If necessary to facilitate the project schedule, the Contractor and the DOR may discuss a submittal proposing a deviation with the Contracting Officer's Representative prior to officially submitting it to the Government. However, the Government reserves the right to review the submittal before providing an opinion, if it deems it necessary. In any case, the Government will not formally agree to or provide a preliminary opinion on any deviation without the DOR's approval or recommended approval. The Government reserves the right to non-concur with any deviation from the design, which may impact furniture, furnishings, equipment selections or operations decisions that were made, based on the reviewed and concurred design.

1.3.4.2. Substitutions. Unless prohibited or provided for otherwise elsewhere in the Contract, where the accepted contract proposal named products, systems, materials or equipment by manufacturer, brand name and/or by model number or other specific identification, and the Contractor desires to substitute manufacturer or model after award, submit a requested substitution for Government concurrence. Include substantiation, identifying information and the DOR's approval, as meeting the contract requirements and that it is equal in function, performance, quality and salient features to that in the accepted contract proposal.

1.3.5. Designer of Record Approved/Government Approved (DA/GA)

Any proposed deviation to the solicitation and/or the accepted proposal constitutes a change to the contract. In addition to the above stated requirements for proposed deviations to the accepted design, both Designer of Record and Government Approval and, where applicable, a contract modification are required before the Contractor is authorized to proceed with material acquisition or installation for any proposed deviation to the contract. Within the terms of the Contract Clause entitled "Specifications and Drawings for Construction", they are considered to be "shop drawings". The Government reserves the right to accept or reject any such proposed deviation at its discretion.

1.3.6. Information Only

All submittals not requiring Designer of Record or Government approval will be for information only. Provide the Government "For Information Only" copies of all submittals not requiring Government approval or concurrence, after the Designer of Record has taken the appropriate action.

1.4. APPROVED OR CONCURRED WITH SUBMITTALS

Do not construe the Contracting Officer's approval of or concurrence with submittals as a complete check, but only that design, general method of construction, materials, detailing and other information appear to meet the Solicitation and Accepted Proposal. Approval or concurrence will not relieve the Contractor of the responsibility for any error which may exist, as the Contractor under the Contractor Quality Control (CQC) requirements of this contract is responsible for design, dimensions, all design extensions, such as the design of adequate connections and details, etc., and the satisfactory construction of all work. The Government won't consider re-submittals for the purpose of substituting previously approved materials or equipment unless accompanied by an explanation of why a substitution is necessary.

1.5. DISAPPROVED SUBMITTALS

Make all corrections required by the Contracting Officer, obtain the Designer of Record's approval when applicable, and promptly furnish a corrected submittal in the form and number of copies specified for the initial submittal. Resubmit any "information only" submittal found to contain errors or unapproved deviations from the Solicitation or Accepted Proposal as one requiring "approval" action, requiring both Designer of Record and Government approval. If the Contractor considers any correction indicated on the submittals to constitute a change to the contract, provide prompt notice in accordance with the Contract Clause "Changes" to the Contracting Officer.

1.6. WITHHOLDING OF PAYMENT

No payment for materials incorporated in the work will be made if all required Designer of Record or required Government approvals have not been obtained. No payment will be made for any materials incorporated into the work for any conformance review submittals or information only submittals found to contain errors or deviations from the Solicitation or Accepted Proposal.

1.7. GENERAL

Make submittals as required by the specifications. The Contracting Officer may request submittals in addition to those specified when deemed necessary to adequately describe the work covered in the respective sections. Units of weights and measures used on all submittals shall be the same as those used in the contract drawings. Each submittal shall be complete and in sufficient detail to allow ready determination of compliance with contract requirements. Prior to submittal, the Contractor's Quality Control (CQC) System Manager and the Designer of Record, if applicable, shall check, approve, sign, and stamp all items, indicating action taken. Clearly idenify proposed deviations from the contract requirements. Include items such as: Contractor's, manufacturer's, or fabricator's drawings; descriptive literature including (but not limited to) catalog cuts, diagrams, operating charts or curves; test reports; test cylinders; samples; O&M manuals (including parts list); certifications; warranties; and other such required submittals. Schedule and make submittals requiring Government approval prior to the acquisition of the material or equipment covered thereby. Pick up and dispose of samples remaining upon completion of the work in accordance with manufacturer's Material Safety Data Sheets (MSDS) and in compliance with existing laws and regulations.

1.8. SUBMITTAL REGISTER (GA)

Develop a complete list of submittals, including each separate design package submittal. Submit the initial submittal register within 15 days after Notice to Proceed, including, as a minimum, the design packages and other initial submittals required elsewhere in the contract. The Designer of Record shall identify required submittals in the specifications, and use the list to prepare the Submittal Register, utilizing the government-provided software, QCS (see Section 01 45 01.10), to create the ENG Form 4288. Appendix R is a preliminary submittal register input form for use with the Quality Management System and the Resident Office Management System (QCS and RMS). The Government will provide the Contractor the actual Excel Spreadsheet version of this sample input form after award to modify and to use for input into QCS. The Excel Spreadsheet is not totally inputable into QCS, so additional keystroke input will be necessary. The sample input form is not all-inclusive. In addition, additional submittals may be required by other parts of the contract. After award, the parties will meet to discuss contract specific (or task order specific for a task order contract) distribution for the submittals all-inclusive and additional submittals may be required by other parts of the contract. Develop and complete the submittal register as the design is completed. Submit it to the Contracting Officer with the un-reviewed final design package submission or as soon as the design specifications are completed, if before the final design submission. When applicable, if the Contractor elects to fast track design and construction, using multiple design package submissions, update the submittal register to reflect the submittals associated with each design submission, clearly denoting all revisions to the previous submission. The submittal register serves as a scheduling document for submittals and for control of submittal actions throughout the contract period. Coordinate the submit dates and need dates used in the submittal register with dates in the Contractor prepared progress schedule. Submit monthly updates to the submittal register showing the Contractor action codes and actual dates with Government action codes and actual dates or until all submittals have been satisfactorily completed. Revise and submit the submittal register when revising the progress schedule.

1.9. SCHEDULING

Schedule submittals covering component items forming a system or items that are interrelated to be coordinated and submitted concurrently. Schedule certifications to be submitted with the pertinent drawings. Allow adequate time (a minimum of 15 calendar days exclusive of mailing time) and show on the register for those items requiring Government approval or concurrence. No delay damages or time extensions will be allowed for time lost in late submittals by the Contractor.

1.10. TRANSMITTAL FORM (ENG FORM 4025)

Use the transmittal form (ENG Form 4025) for submitting submittals in accordance with the instructions on the reverse side of the form. These forms will be furnished to the Contractor or are included in the QCS software if the Contractor is required to use QCS for this contract. Use a separate transmittal form for each specification section Complete this form by filling out all the heading blank spaces and identify

each item submitted. Exercise special care to ensure proper listing of the specification paragraph and/or sheet number of the contract drawings pertinent to the data submitted for each item.

1.11. SUBMITTAL PROCEDURES

Make submittals as follows:

1.11.1. Procedures

The Government will further discuss detailed submittal procedures with the Contractor at the Post-Award Conference.

1.11.2. Deviations

For submittals which include proposed deviations requested by the Contractor, check the column "variation" of ENG Form 4025. Set forth in writing the reason for any deviations and annotate such deviations on the submittal. The Government reserves the right to rescind inadvertent approval of submittals containing unnoted deviations.

1.12. CONTROL OF SUBMITTALS

Carefully control his procurement operations to ensure that each individual submittal is made on or before the scheduled submittal date shown on the approved "Submittal Register."

1.13. GOVERNMENT APPROVED OR CONCURRED WITH SUBMITTALS

Upon completion of review of submittals requiring Government approval or concurrence, the Government will stamp and date the submittals as approved or concurred.. The Government will retain four (4) copies of the submittal and return two (2) copy(ies) of the submittal.

1.14. INFORMATION ONLY SUBMITTALS

Normally submittals for information only will not be returned. Approval of the Contracting Officer is not required on information only submittals. The Government reserves the right to require the Contractor to resubmit any item found not to comply with the contract. This does not relieve the Contractor from the obligation to furnish material conforming to the plans and specifications; will not prevent the Contracting Officer from requiring removal and replacement of nonconforming material incorporated in the work; and does not relieve the Contractor of the requirement to furnish samples for testing by the Government laboratory or for check testing by the Government in those instances where the technical specifications so prescribe. The Government will retain four (4) copies of information only submittals.

1.15. STAMPS

Use stamps similar to the following on the submittal data to certify that the submittal meets contract requirements:

CONTRACTOR

(FIRM NAME)

_____ Approved

_____

Approved with corrections as noted on submittal data and/or attached sheet(s)

_____

Signature: _____

Title: _____

Date: _____

For design-build construction, both the Contractor Quality Control System Manager and the Designer of Record shall stamp and sign to certify that the submittal meets contract requirements.

SECTION 01 33 16
DESIGN AFTER AWARD

1.0 GENERAL INFORMATION

1.1. INTRODUCTION

1.2. DESIGNER OF RECORD

2.0 PRODUCTS (Not Applicable)

3.0 EXECUTION

3.1. PRE-WORK ACTIVIES & CONFERENCES

3.1.1. Design Quality Control Plan

3.1.2. Post Award Conference

3.1.3. Partnering & Project Progress Processes

3.1.4. Initial Design Conference

3.1.5. Pre-Construction Conference

3.2. STAGES OF DESIGN SUBMITTALS AND OVER THE SHOULDER PROGRESS REVIEWS

3.2.1. Site/Utilities

3.2.2. Interim Design Submittals

3.2.3. Over-the-Shoulder Progress Reviews

3.2.4. Final Design Submissions

3.2.5. Design Complete Submittals

3.2.6. Holiday Periods for Government Review or Actions

3.2.7. Late Submittals and Reviews

3.3. DESIGN CONFIGURATION MANAGEMENT

3.3.1. Procedures

3.3.2. Tracking Design Review Comments

3.3.3. Design and Code Checklists

3.4. INTERIM DESIGN REVIEWS AND CONFERENCES

3.4.1. General

3.4.2. Procedures

3.4.3. Conference Documentation

3.5. INTERIM DESIGN REQUIREMENTS

3.5.1. Drawings

3.5.2. Design Analyses

3.5.3. Geotechnical Investigations and Reports

3.5.4. LEED Documentation

3.5.5. Energy Conservation

3.5.6. Specifications

3.5.7. Building Rendering

3.5.8. Interim Building Design Contents

3.6. FINAL DESIGN REVIEWS AND CONFERENCES

3.7. FINAL DESIGN REQUIREMENTS

3.7.1. Drawings

3.7.2. Design Analysis

3.7.3. Specifications

3.7.4. Submittal Register

3.7.5. Preparation of DD Form 1354 (Transfer of Real Property)

3.7.6. Acceptance and Release for Construction

3.8. DESIGN COMPLETE CONSTRUCTION DOCUMENT REQUIREMENTS

3.9. SUBMITTAL DISTRIBUTION, MEDIA AND QUANTITIES

3.9.1. Submittal Distribution and Quantities

3.9.2. Web based Design Submittals

3.9.3. Mailing of Design Submittals

3.10. AS-BUILT DOCUMENTS

ATTACHMENT A STRUCTURAL INTERIOR DESIGN (SID) REQUIREMENTS

ATTACHMENT B FURNITURE, FIXTURES AND EQUIPMENT REQUIREMENTS

ATTACHMENT C TRACKING COMMENTS IN DRCHECKS

ATTACHMENT D SAMPLE FIRE PROTECTION AND LIFE SAFETY CODE REVIEW

ATTACHMENT E LEED SUBMITTALS

ATTACHMENT F BUILDING INFORMATION MODELING REQUIREMENTS

ATTACHMENT G DESIGN SUBMITTAL DIRECTORY AND SUBDIRECTORY FILE ARRANGEMENT

1.0 GENERAL INFORMATION

1.1. INTRODUCTION

1.1.1. The information contained in this section applies to the design required after award. After award, the Contractor will develop the accepted proposal into the completed design, as described herein.

1.1.2. The Contractor may elect to fast track the design and construction that is, proceed with construction of parts of the sitework and facilities prior to completion of the overall design. To facilitate fast tracking, the Contractor may elect to divide the design into no more than six (6) design packages per major facility type and no more than three (3) design packages for site and associated work. Designate how it will package the design, consistent with its overall plan for permitting (where applicable) and construction of the project. See Sections 01 33 00 SUBMITTAL PROCEDURES and 01 32 01.00 10 PROJECT SCHEDULE for requirements for identifying and scheduling the design packaging plan in the submittal register and project schedule. See also Sections 01 10 00 STATEMENT OF WORK and 01 57 20.00 10 ENVIRONMENTAL PROTECTION for any specified permit requirements. If early procurement of long-lead item construction materials or installed equipment, prior to completion of the associated design package, is necessary to facilitate the project schedule, also identify those long-lead items and how it will assure design integrity of the associated design package to meet the contract requirements (The Contract consists of the Solicitation requirements and the accepted proposal). Once the Government is satisfied that the long-lead items meet the contract requirements, the Contracting Officer will allow the Contractor to procure the items at its own risk.

1.1.3. The Contractor may proceed with the construction work included in a separate design package after the Government has reviewed the final (100%) design submission for that package, review comments have been addressed and resolved to the Government's satisfaction and the Contracting Officer (or the Administrative Contracting Officer) has agreed that the design package may be released for construction.

1.1.4. INTEGRATED DESIGN. To the maximum extent permitted for this project, use a collaborative, integrated design process for all stages of project delivery with comprehensive performance goals for siting, energy, water, materials and indoor environmental quality and ensures incorporation of these goals. Consider all stages of the building lifecycle, including deconstruction.

1.2. DESIGNER OF RECORD

Identify, for approval, the Designer of Record (“DOR”) that will be responsible for each area of design. One DOR may be responsible for more than one area. Listed, Professional Registered, DOR(s) shall account for all areas of design disciplines. The DOR’s shall stamp, sign, and date each design drawing and other design deliverables under their responsible discipline at each design submittal stage (see contract clause Registration of Designers). If the deliverables are not ready for release for construction, identify them as "preliminary" or "not for release for construction" or by using some other appropriate designation. The DOR(s) shall also be responsible for maintaining the integrity of the design and for compliance with the contract requirements through construction and documentation of the as-built condition by coordination, review and approval of extensions of design, material, equipment and other construction submittals, review and approval or disapproval of requested deviations to the accepted design or to the contract, coordination with the Government of the above activities, and by performing other typical professional designer responsibilities.

2.0 PRODUCTS (Not Applicable)

3.0 EXECUTION

3.1. PRE-WORK ACTIVITIES & CONFERENCES

3.1.1. Design Quality Control Plan

Submit for Government acceptance, a Design Quality Control Plan in accordance with Section 01 45 04.00 10 CONTRACTOR QUALITY CONTROL before design may proceed.

3.1.2. Post Award Conference

3.1.2.1. The government will conduct a post award contract administration conference at the project site, as soon as possible after contract award. This will be coordinated with issuance of the contract notice to proceed (NTP). The Contractor and major sub-contractor representatives shall participate. All designers need not attend this first meeting. Government representatives will include COE project delivery team members, facility users, facility command representatives, and installation representatives. The Government will provide an agenda, meeting goals, meeting place, and meeting time to participants prior to the meeting.

3.1.2.2. The post award conference shall include determination and introduction of contact persons, their authorities, contract administration requirements, discussion of expected project progress processes, and coordination of subsequent meetings for quality control (see Section 01 45 04.00 10 CONTRACTOR QUALITY CONTROL), Partnering (see below and SCR: Partnering), and the initial design conference (see below).

3.1.2.3. The government will introduce COE project delivery team members, facility users, facility command representatives, and installation representatives. The DB Contractor shall introduce major subcontractors, and other needed staff. Expectations and duties of each person shall be defined for all participants. A meeting roster shall be developed and distributed by the government with complete contact information including name, office, project role, phone, mailing and physical address, and email address.

3.1.3. Partnering & Project Progress Processes

3.1.3.1. The initial Partnering conference may be scheduled and conducted at any time with or following the post award conference. The Government proposes to form a partnership with the DB Contractor to develop a cohesive building team. This partnership will involve the COE project delivery team members, facility users, facility command representatives, installation representatives, Designers of Record, major subcontractors, contractor quality control staff, and contractor construction management staff. This partnership will strive to develop a cooperative management team drawing on the strengths of each team member in an effort to achieve a quality project within budget and on schedule. This partnership will be bilateral in membership and participation will be totally voluntary. All costs, excluding labor and travel expenses, shall be shared equally between the Government and the Contractor. The Contractor and Government shall be responsible for their own labor and travel costs. Normally, partnering meetings will be held at or in the vicinity of the project installation.

3.1.3.2. As part of the partnering process, the Government and Contractor shall develop, establish, and agree to comprehensive design development processes including conduct of conferences, expectations of design development at conferences, fast-tracking, design acceptance, Structural Interior Design (SID)/ Furniture, Fixtures & Equipment (FF&E) design approval, project closeout, etc. The government will explain contract requirements and the DB Contractor shall review their proposed project schedule and suggest ways to streamline processes.

3.1.4. Initial Design Conference

The initial design conference may be scheduled and conducted at the project installation any time after the post award conference, although it is recommended that the partnering process be initiated with or before the initial design conference. Any design work conducted after award and prior to this conference should be limited to site and is discouraged for other items. All Designers of Record shall participate in

the conference. The purpose of the meeting is to introduce everyone and to make sure any needs the contractor has are assigned and due dates established as well as who will get the information. See also Attachment F, BUILDING INFORMATION MODELING REQUIREMENTS for discussion concerning the BIM Implementation Plan demonstration at this meeting. The DB Contractor shall conduct the initial design conference.

3.1.5. Pre-Construction Conference

Before starting construction activities, the Contractor and Government will jointly conduct a pre-construction administrative conference to discuss any outstanding requirements and to review local installation requirements for start of construction. It is possible there will be multiple Pre-Construction Conferences based on the content of the design packages selected by the Contractor. The Government will provide minutes of this meeting to all participants.

3.2. STAGES OF DESIGN SUBMITTALS AND OVER THE SHOULDER PROGRESS REVIEWS

The stages of design submittals described below define Government expectations with respect to process and content. The Contractor shall determine how to best plan and execute the design and review process for this project, within the parameters listed below. As a minimum, the Government expects to see at least one interim design submittal, at least one final design submittal before construction of a design package may proceed and at least one Design Complete submittal that documents the accepted design. The Contractor may sub-divide the design into separate packages for each stage of design and may proceed with construction of a package after the Government accepts the final design for that package. See discussion on waivers to submission of one or more intermediate design packages where the parties partner during the design process. See also Attachment F, BUILDING INFORMATION MODELING REQUIREMENTS for discussion concerning BIM and the various stages of design submittals and over-the-shoulder progress reviews**.**

3.2.1. Site/Utilities

To facilitate fast-track design-construction activities the contractor may submit a final (100%) site and utility design as the first design submittal or it may elect to submit interim and final site and utility design submittals as explained below. Following review, resolution, and incorporation of all Government comments, and submittal of a satisfactory set of site/utility design documents, after completing all other pre-construction requirements in this contract and after the pre-construction meeting, the Government will allow the Contractor to proceed with site development activities, including demolition where applicable, within the parameters set forth in the accepted design submittal. For the first site and utility design submission, whether an interim or final, the submittal review, comment, and resolution times from this specification apply, except that the Contractor shall allow the Government a 14 calendar day review period, exclusive of mailing time. No on-site construction activities shall begin prior to written Government clearance to proceed.

3.2.2. Interim Design Submittals

The Contractor may submit either a single interim design for review, representing a complete package with all design disciplines, or split the interim design into smaller, individual design packages as it deems necessary for fast-track construction purposes. As required in Section 01 32 01.00 10 PROJECT SCHEDULE, the Contractor shall schedule its design and construction packaging plan to meet the contract completion period. This submission is the Government's primary opportunity to review the design for conformance to the solicitation and to the accepted contract proposal and to the Building Codes at a point where required revisions may be still made, while minimizing lost design effort to keep the design on track with the contract requirements. The requirements for the interim design review submittals and review conferences are described hereinafter. This is not necessarily a hold point for the design process; the Contractor may designate the interim design submittal(s) as a snapshot and proceed with design development at its own risk. See below for a waiver, where the parties establish an effective

over-the-shoulder progress review procedure through the partnering process that would eliminate the need for or expedite a formal intermediate design review on one or more individual design packages.

3.2.3. Over-the-Shoulder Progress Reviews

To facilitate a streamlined design-build process, the Government and the Contractor may agree to one-on-one reviewer or small group reviews, electronically, on-line (if available within the Contractor's standard design practices) or at the Contractor's design offices or other agreed location, when practicable to the parties. The Government and Contractor will coordinate such reviews to minimize or eliminate disruptions to the design process. Any data required for these reviews shall normally be provided in electronic format, rather than in hard copy. If the Government and Contractor establish and implement an effective, mutually agreeable partnering procedure for regular (e.g., weekly) over-the shoulder review procedures that allow the Government reviewers the opportunity to keep fully informed of the progress, contents, design intent, design documentation, etc. of the design package, the Government will agree to waive or to expedite the formal intermediate design review period for that package. The Contractor shall still be required to submit the required intermediate design documentation, however the parties may agree to how that material will be provided, in lieu of a formal consolidated submission of the package. It should be noted that Government funding is extremely limited for non-local travel by design reviewers, so the maximum use of virtual teaming methods must be used. Some possible examples include electronic file sharing, interactive software with on-line or telephonic conferencing, televideo conferencing, etc. The Government must still perform its Code and Contract conformance reviews, so the Contractor is encouraged to partner with the reviewers to find ways to facilitate this process and to facilitate meeting or bettering the design-build schedule. The Contractor shall maintain a fully functional configuration management system as described herein to track design revisions, regardless of whether or not there is a need for a formal intermediate design review. The formal intermediate review procedures shall form the contractual basis for the official schedule, in the event that the partnering process determines that the formal intermediate review process to be best suited for efficient project execution. However, the Government pledges to support and promote the partnering process to work with the Contractor to find ways to better the design schedule.

3.2.4. Final Design Submissions

This submittal is required for each design package prior to Government acceptance of that design package for construction. The requirements for the final design submittal review conferences and the Government's acceptance for start of construction are described herein after.

3.2.5. Design Complete Submittals

After the final design submission and review conference for a design package, revise the design package to incorporate the comments generated and resolved in the final review conferences, perform and document a back-check review and submit the final, design complete documents, which shall represent released for construction documents. The requirements for the design complete submittals are described hereinafter.

3.2.6. Holiday Periods for Government Review or Actions

Do not schedule meetings, Government reviews or responses during the last two weeks of December or other designated Government Holidays (including Friday after Thanksgiving). Exclude such dates and periods from any durations specified herein for Government actions.

3.2.7. Late Submittals and Reviews

If the Contractor cannot meet its scheduled submittal date for a design package, it must revise the proposed submittal date and notify the government in writing, at least one (1) week prior to the submittal, in order to accommodate the Government reviewers' other scheduled activities. If a design submittal is

over one (1) day late in accordance with the latest revised design schedule, or if notification of a proposed design schedule change is less than seven (7) days from the anticipated design submission receipt date, the Government review period may be extended up to seven (7) days due to reviewers' schedule conflicts. If the Government is late in meeting its review commitment and the delay increases the Contractor's cost or delays completion of the project, the Suspension of Work and Defaults clauses provide the respective remedy or relief for the delay.

3.3. DESIGN CONFIGURATION MANAGEMENT

3.3.1. Procedures

Develop and maintain effective, acceptable design configuration management (DCM) procedures to control and track all revisions to the design documents after the Interim Design Submission through submission of the As-Built documents. During the design process, this will facilitate and help streamline the design and review schedule. After the final design is accepted, this process provides control of and documents revisions to the accepted design (See Special Contract Requirement: Deviating From the Accepted Design). The system shall include appropriate authorities and concurrences to authorize revisions, including documentation as to why the revision must be made. Include the DCM procedures in the Design Quality Control Plan. The DCM data shall be available to the Government reviewers at all times. The Contractor may use its own internal system with interactive Government concurrences, where necessary or may use the Government's "DrChecks Design Review and Checking System" (see below and Attachment C).

3.3.2. Tracking Design Review Comments

Although the Contractor may use its own internal system for overall design configuration management, the Government and the Contractor shall use the DrChecks Design Review and Checking System to initiate, respond to, resolve and track Government design compliance review comments. This system may be useful for other data which needs to be interactive or otherwise available for shared use and retrieval. See Attachment C for details on how to establish an account and set-up the DrChecks system for use on the project.

3.3.3. Design and Code Checklists

Develop and complete various discipline-specific checklists to be used during the design and quality control of each submittal. Submit these completed checklists with each design submittal, as applicable, as part of the project documentation. See Section 01 45 04.00 10 Contractor Quality Control, Attachment D for a Sample Fire Protection and Life Safety Code review checklist and Attachment E for LEED SUBMITTALS.

3.4. INTERIM DESIGN REVIEWS AND CONFERENCES

3.4.1. General

At least one interim design submittal, review and review conference is required for each design package (except that, per paragraph 3.2.1, the Contractor may skip the interim design submission and proceed directly to final design on the sitework and utilities package). The DB Contractor may include additional interim design conferences or over-the-shoulder reviews, as needed, to assure continued government concurrence with the design work. Include the interim submittal review periods and conferences in the project schedule and indicate what part of the design work is at what percentage of completion. The required interim design conferences shall be held when interim design requirements are reached as described below. See also Paragraph: **Over-the-Shoulder Progress Reviews** for a waiver to the formal interim design review.

3.4.2. Procedures

After receipt of an Interim Design submission, allow the Government fourteen (14) calendar days after receipt of the submission to review and comment on the interim design submittal. For smaller design packages, especially those that involve only one or a few separate design disciplines, the parties may agree on a shorter review period or alternative review methods (e.g., over-the–shoulder or electronic file sharing), through the partnering process. For each interim design review submittal, the COR will furnish, to the Contractor, a single consolidated, validated listing of all comments from the various design sections and from other concerned agencies involved in the review process using the DrChecks Design Review and Checking System. The review will be for conformance with the technical requirements of the solicitation and the Contractor's RFP proposal. If the Contractor disagrees technically with any comment or comments and does not intend to comply with the comment, he/she must clearly outline, with ample justification, the reasons for noncompliance within five (5) days after receipt of these comments in order that the comment can be resolved. Furnish disposition of all comments, in writing, through DrChecks. The Contractor is cautioned that if it believes the action required by any comment exceeds the requirements of this contract, that it should take no action and notify the COR in writing immediately. The Interim Review conference will be held for each design submittal at the installation. Bring the personnel that developed the design submittal to the review conference. The conference will take place the week after the receipt of the comments by the Contractor. For smaller fast-track packages that involve only a few reviewers, the parties may agree to alternative conferencing methods, such as teleconferencing, or televideo, where available, as determined through Partnering.

3.4.3. Conference Documentation

3.4.3.1. In order to facilitate and accelerate the Government code and contract conformance reviews, identify, track resolution of and maintain all comments and action items generated during the design process and make this available to the designers and reviewers prior to the Interim and subsequent design reviews.

3.4.3.2. The DB Contractor shall prepare meeting minutes and enter final resolution of all comments into DrChecks. Copies of comments, annotated with comment action agreed on, will be made available to all parties before the conference adjourns. Unresolved problems will be resolved by immediate follow-on action at the end of conferences. Incorporate valid comments. The Government reserves the right to reject design document submittals if comments are significant. Participants shall determine if any comments are critical enough to require further design development prior to government concurrence. Participants shall also determine how to proceed in order to obtain government concurrence with the design work presented.

3.5. INTERIM DESIGN REQUIREMENTS

Interim design deliverables shall include drawings, specifications, and design analysis for the part of design that the Contractor considers ready for review.

3.5.1. Drawings

Include comments from any previous design conferences incorporated into the documents to provide an interim design for the “part” submitted.

3.5.2. Design Analyses

3.5.2.1. The designers of record shall prepare and present design analyses with calculations necessary to substantiate and support all design documents submitted. Address design substantiation required by the applicable codes and references and pay particular attention to the following listed items:

3.5.2.2. For parts including sitework, include site specific civil calculations.

3.5.2.3. For parts including structural work, include structural calculations.

(a) Identify all loads to be used for design.

(b) Describe the method of providing lateral stability for the structural system to meet seismic and wind load requirements. Include sufficient calculations to verify the adequacy of the method.

(c) Provide calculations for all principal roof, floor, and foundation members and bracing and secondary members.

(d) Provide complete seismic analyses for all building structural, mechanical, electrical, architectural, and building features as dictated by the seismic zone for which the facility is being constructed.

(e) Computer generated calculations must identify the program name, source, and version. Provide input data, including loads, loading diagrams, node diagrams, and adequate documentation to illustrate the design. The schematic models used for input must show, as a minimum, nodes/joints, element/members, materials/properties, and all loadings, induced settlements/deflections, etc., and a list of load combinations. Include an output listing for maximum/minimum stresses/forces and deflections for each element and the reactions for each loading case and combination.

(f) See also the Security (Anti-Terrorism) requirements below for members subject to Anti-Terrorist Force Protection (ATFP) and Progressive Collapse requirements.

(g) Fully coordinate and integrate the overall structural design between two different or interfacing construction types, such as modular and stick-built or multistory, stacked modular construction. Provide substantiation of structural, consolidation/settlement analysis, etc., as applicable, through the interfaces.

3.5.2.4. For Security (Anti-Terrorism): Provide a design narrative and calculations where applicable, demonstrating compliance with each of the 22 standards in UFC 4-010-01, which includes Design of Buildings to Resist Progressive Collapse (use the most recent version of UFC 4-023-03, regardless of references to any specific version in UFC 4-010-01). Where sufficient standoff distance is not being provided, show calculations for blast resistance of the structural system and building envelope. Show complete calculations for members subjected to ATFP loads, e.g., support members of glazed items (jambs, headers, sills) connections of windows to support members and connections of support members to the rest of the structure. For 3 story and higher buildings, provide calculations to demonstrate compliance with progressive collapse requirements.

3.5.2.5. For parts including architectural work, include building floor area analysis.

3.5.2.6. For parts including mechanical work, include HVAC analysis and calculations. Include complete design calculations for mechanical systems. Include computations for sizing equipment, compressed air systems, air duct design, and U-factors for ceilings, roofs and exterior walls and floors. Contractor shall employ commercially available energy analysis techniques to determine the energy performance of all passive systems and features. Use of hourly energy load computer simulation is required (see paragraph 3.5.5.2 for list of acceptable software). Based on the results of calculations, provide a complete list of the materials and equipment proposed with the manufacturer's published cataloged product installation specifications and roughing-in data.

3.5.2.7. For parts including life safety, include building code analysis and sprinkler and other suppression systems. Notwithstanding the requirements of the Codes, address the following:

(a) A registered fire protection engineer (FPE) must perform all fire protection analyses. Provide the fire protection engineer’s qualifications. See Section 01 10 00, paragraph 5 for qualifications.

(b) Provide all references used in the design including Government design documents and industry standards used to generate the fire protection analysis.

(c) Provide classification of each building in accordance with fire zone, building floor areas and height and number of stories.

(d) Provide discussion and description of required fire protection requirements including extinguishing equipment, detection equipment, alarm equipment and water supply. Alarm and detection equipment shall interface to requirements of Electronic Systems.

(e) Provide hydraulic calculations based on water flow test for each sprinkler system to insure that flow and pressure requirements can be met with current water supply. Include copies of Contractor's water flow testing done to certify the available water source.

3.5.2.8. For parts including plumbing systems:

(a) List all references used in the design.

(b) Provide justification and brief description of the types of plumbing fixtures, piping materials and equipment proposed for use.

(c) Detail calculations for systems such as sizing of domestic hot water heater and piping; natural gas piping; LP gas piping and tanks, fuel oil piping and tanks, etc., as applicable.

(d) When the geotechnical report indicates expansive soils are present, indicate in the first piping design submittal how piping systems will be protected against damage or backfall/backflow due to soil heave (from penetration of slab to the 5 foot building line).

3.5.2.9. For elevator systems:

(a) List all criteria codes, documents and design conditions used.

(b) List any required permits and registrations for construction of items of special mechanical systems and equipment.

3.5.2.10. For parts including electrical work, include lighting calculations to determine maintained foot-candle levels, electrical load analysis and calculations, electrical short circuit and protective device coordination analysis and calculations and arc fault calculations.

3.5.2.11. For parts including telecommunications voice/data (including SIPRNET, where applicable), include analysis for determining the number and placement of outlets

3.5.2.12. For Cathodic Protection Systems, provide the following stamped report by the licensed corrosion engineer or NACE specialist with the first design submission. The designer must be qualified to engage in the practice of corrosion control of buried or submerged metallic surfaces. He/she must be accredited or certified by the National Association of Corrosion Engineers (NACE) as a NACE Accredited Corrosion Specialist or a NACE certified Cathodic Protection Specialist, or must be a registered professional engineer with a minimum of five years experience in corrosion control and cathodic protection, Clearly describe structures, systems or components in soil or water to be protected. Describe methods proposed for protection of each.

3.5.2.13. Air Barrier System: Provide a narrative of the design and installation requirements for the Air Barrier system. As part of the design quality control process an air barrier consultant shall review drawing details to assure that details of critical Air Barrier components are properly detailed and incorporated during the design drawings and process (i.e. window flashing details, penetration in air barrier details, door flashing details, roofing/ceiling barrier interface details and etc.). Furnish the Government written review details and results.

3.5.2.14. Life Cycle Cost Analysis (LCCA) Documentation: Sufficient documentation is required for all life cycle cost analyses required in paragraph 5 of Section 01 10 00, the Statement of Work. Each LCCA must be complete and substantial, sufficient of being read as a standalone document which defines all the parameters of the analysis. Use of commercially available software programs to calculate life cycle costs are acceptable, however, provide the LCCA Documentation requirements, as outlined below in addition to any input/output documents generated by the software. As a minimum, include the following items in the LCCA documentation:

(a) Definition of Baseline Condition

(b) Narrative Identification/Explanation of Each Alternative Considered

(c) Energy Usage Analysis (Narrative explanation as well as computer outputs)

(d) Energy Costs Used (Source of Rate Structure or Utility Rates)

(e) First Cost of Baseline Condition and Each Alternative (Cost information must demonstrate inclusion of applicable components and sub-components - single line, lump sum cost estimates for the baseline or alternative conditions are not acceptable)

(f) Cyclical Replacement Costs (Identify data source for equipment/component life used)

(g) Annual/Recurring Maintenance Costs (Identify data source for required maintenance tasks and duration/cost of tasks)

(h) Salvage Values (Identify data source for equipment/component life used)

(i) Life Cycle Cost Results Including:

(1) Life Cycle Cost of the Baseline Condition

(2) Life Cycle Cost of Each Alternative Evaluated

(3) Simple Payback Calculations for Each Alternative

(4) Savings to Investment Ratio for Each Alternative

(5) Study Period Utilized

(6) Net Savings for Each Alternative (As Applicable)

(7) Narrative Discussion/Analysis of Results

(8) Uncertainty Analysis

(9) Certification that the analysis conducted and documented is compliant with the terms, instructions, and conditions of 10 CFR 436 Subpart A.

3.5.3. Geotechnical Investigations and Reports:

3.5.3.1. The contractor's licensed geotechnical engineer shall prepare a final geotechnical evaluation report, to be submitted along with the first foundation design submittal. Make this information available as early as possible during the over-the-shoulder progress review process. Summarize the subsurface conditions and provide recommendations for the design of appropriate utilities, foundations, floor slabs, retaining walls, embankments, and pavements. Include compaction requirements for fill and backfill under buildings, sidewalks, other structures and open areas. Recommend foundation systems to be used, allowable bearing pressures for footings, lateral load resistance capacities for foundation systems, elevations for footings, grade beams, slabs, etc. Provide an assessment of post-construction settlement potential including total and differential. Provide recommendations regarding lateral earth pressures (active, at-rest, passive) to be used in the design of retaining walls. Include the recommended spectral accelerations and Site Class for seismic design along with an evaluation of any seismic hazards and recommendations for mitigation, if required. Include calculations to support the recommendations for bearing capacity, settlement, and pavement sections. Include supporting documentation for all recommended design parameters such as Site Class, shear strength, earth pressure coefficients, friction factors, subgrade modulus, California Bearing Ratio (CBR), etc. Provide earthwork recommendations, expected frost penetration, expected groundwater levels, recommendations for dewatering and groundwater control and the possible presence of any surface or subsurface features that may affect the construction of the project such as sinkholes, boulders, shallow rock, old fill, old structures, soft areas, or unusual soil conditions. Include pH tests, salinity tests, resistivity measurements, etc., required to design corrosion control and grounding systems. Include the raw field data. Arrange a meeting with the Government subsequent to completion and evaluation of the site specific geotechnical exploration to outline any differences encountered that are inconsistent with the Government provided preliminary soils

information. Clearly outline differences which require changes in the foundation type, or pavement and earthwork requirements from that possible and contemplated using the Government furnished preliminary soils investigation, which result in a change to the design or construction. Any equitable adjustment is subject to the provisions of the contract's Differing Site Conditions Clause.

3.5.3.2. Vehicle Pavements: The Contractor's geotechnical report shall contain flexible and rigid pavement designs, as applicable for the project, including design CBR and modulus of subgrade reaction and the required compaction effort for subgrades and pavement layers. Provide Information on the types of base course materials available in the area and design strengths.

3.5.3.3. The Contractor and the professional geotechnical engineer consultant shall certify in writing that the design of the project has been developed consistent with the Contractor's final geotechnical report. The certification shall be stamped by the consulting professional geotechnical engineer and shall be submitted with the first design submission. If revisions are made to the initial design submission, a new certification shall be provided with the final design submission.

3.5.4. LEED Documentation:

Assign a LEED Accredited Professional, responsible to track LEED planning, performance and documentation for each LEED credit through construction closeout. Incorporate LEED credits in the plans, specifications and design analyses. Develop LEED supporting documentation as a separable portion of the Design Analysis and provide with each required design submittal. Include the LEED Project checklist for each non-exempt facility (one checklist may be provided for multiple facilities in accordance with the LEED-NC Application Guide for Multiple Buildings and On-Campus Building Projects and the LEED SUBMITTALS (Attachment E, herein) with each submittal. Final design submittal for each portion of the work must include all required design documentation relating to that portion of work (example - all site credit design documents with final site design). Submittal requirements are as indicated in Attachment E, LEED SUBMITTALS. Submit all documentation indicated on Attachment E as due at final design at final design submittal (for fast-track projects with multiple final design submittals, this shall be at the last scheduled final design submittal). All project documentation related to LEED shall conform to USGBC requirements for both content and format, including audit requirements and be separate from other design analyses. Maintain and update the LEED documentation throughout project progress to construction closeout and shall compile product data, receipts, calculations and other data necessary to substantiate and support all credits claimed. The Government may audit any or all individual credits. Audit documentation is not required to be submitted unless requested. These requirements apply to all projects. If the project requires the Contractor to obtain USGBC certification, the Contractor shall also be responsible for obtaining USGBC certification and shall provide written evidence of certification with the construction closeout LEED documentation submittal. Install the USGBC building plaque at the location indicated by the Government upon receipt. If Contractor obtains USGBC interim design review, submit the USGBC review to the Government within 30 days of receipt for information only.

3.5.4.1. LEED Documentation for Technology Solution Set. If the Solicitation provides a Prescriptive Technology Solution Set, use of the Technology Solution set has no effect on LEED documentation requirements. Provide all required LEED documentation, including energy analysis, in accordance with LEED requirements when using the Technology Solution Set.

3.5.5. Energy Conservation:

3.5.5.1. Refer to Section 01 10 00, Paragraph 5. Interim and Final Design submittals shall demonstrate that each building including the building envelope, HVAC systems, service water heating, power, and lighting systems meet the Mandatory Provisions and the Prescriptive Path requirements of ASHRAE 90.1. Use Compliance Documentation forms available from ASHRAE and included in the ASHRAE 90.1 User's Manual for this purpose. The Architectural Section of the Design Analysis shall include completed forms titled "Building Envelope Compliance Documentation Parts I and II". The Heating Ventilating and Air Conditioning (HVAC) Section of the Design Analysis shall include a completed form titled "HVAC Simplified Approach Option - Part I" if this approach is allowed by the Standard. Otherwise, the HVAC

Section of the Design Analysis shall include completed forms titled “HVAC Mandatory Provisions - Part II” and “HVAC Prescriptive Requirements - Part III”. The Plumbing Section of the Design Analysis shall include a completed form titled “Service Water Heating Compliance Documentation”. The Electrical Section of the Design Analysis shall include an explanatory statement on how the requirements of ASHRAE 90.1 Chapter 8 Power were met. The Electrical Section of the Design Analysis shall also include a completed form titled “Lighting Compliance Documentation”.

3.5.5.2. Interim and Final Design submittals which address energy consuming systems, (heating, cooling, service hot water, lighting, power, etc.) must also include calculations in a separate Energy Conservation Section of the Design Analysis which demonstrate and document (a) the baseline energy consumption for the facility or facilities under contract, that would meet the requirements of ANSI/ASHRAE/IESNA Standard 90.1 and (b) the energy consumption of the facility or facilities under contract utilizing the materials and methods required by this construction contract. Use the USGBC Energy and Atmosphere (EA) Credit 1 compliance template / form or an equivalently detailed form for documenting compliance with the energy reduction requirements. This template / form is titled PERFORMANCE RATING METHOD and is available when the project is registered for LEED. The calculation methodology used for this documentation and analysis shall follow the guidelines set forth in Appendix G of ASHRAE 90.1, with two exceptions: a) receptacle and process loads may be omitted from the calculation; and b) the definition of the terms in the formula for Percentage Improvement found in paragraph G1.2 are modified as follows: Baseline Building Performance shall mean the annual energy consumption calculated for a building design intended for use as a baseline for rating above standard design meeting the minimum requirements of the energy standard, and Proposed Building Performance shall mean annual energy consumption calculated for the proposed building design intended for construction. This calculation shall address all energy consuming systems in a single integrated methodology. Include laboratory fume hoods and kitchen ventilation loads in the energy calculation. They are not considered process loads. Individual calculations for heating, cooling, power, lighting, power, etc. systems will not be acceptable. The following building simulation software is acceptable for use in calculating building energy consumption: Hourly Analysis Program (HAP) by Carrier Corp., TRACE 700 by Trane Corp., DOE-2 by US Department of Energy, EnergyPlus by DOD/DOE.

3.5.6. Specifications

Specifications may be any one of the major, well known master guide specification sources. Uuse only one source. Examples include specifications from MASTERSPEC from the American Institute of Architects, SPECTEXT from Construction Specification Institute or Unified Facility Guide Specifications (UFGS using MASTERFORMAT 2004 numbering system), etc. The UFGS are available through the “Whole Building Design Guide” website, using a websearch engine. Manufacturers’ product specifications, utilizing CSI’s Manu-Spec, three part format may be used in conjunction with the selected specifications. The designers of record shall edit and expand the appropriate Specifications to insure that all project design requirements, current code requirements, and regulatory requirements are met. Specifications shall clearly identify, where appropriate, specific products chosen to meet the contract requirements (i.e., manufacturers’ brand names and model numbers or similar product information). Note that the UFGS are NOT written for Design-Build and must be edited appropriately. For instance, they assume that the Government will approve most submittals, whereas in Design-Build, the Designer of Record has that action, unless this Solicitation requires Government approval for specific submittals. The Designer of Record should also note that some UFGS sections might either prescribe requirements exceeding the Government’s own design standards in applicable references or contain requirements that should be selected where appropriately required by the applicable references. At any rate, where the UFGS are consistent with other major, well known master commercial guide specifications, then generally retain such requirements, as good practices.

3.5.7. Building Rendering

Present and provide a draft color computer, artist, or hand drawn rendering with the conceptual design submittal of the building exterior. Perspective renderings shall include a slightly overhead view of the

entire building to encompass elevations and the roof configuration of the building. After Government review and acceptance, provide a final rendering, including the following:

Three (3) 18” x 24” color prints, framed and matted behind glass with project title underneath the print.

One (1) Image file (high resolution) in JPG format on CD for those in the submittal distribution list.

3.5.8. Interim Building Design Contents

The following list represents what the Government considers should be included in the overall completed design for a facility or project. It is not intended to limit the contractor from providing different or additional information as needed to support the design presented, including the require design analyses discussed above. As the Contractor develops individual design packages and submits them for Interim review, include as much of the applicable information for an individual design package as is developed at the Interim design level for review purposes. These pieces shall be developed as the design progresses toward the design complete stage.

3.5.8.1. Lawn and Landscaping Irrigation System

3.5.8.2. Landscape, Planting and Turfing

3.5.8.3. Architectural

(a) Design Narrative

(b) Architectural Floor Plans, Typical Wall and Roof Sections, Elevations

(c) Finish schedule

(d) All required equipment

(e) Special graphics requirements

(f) Door and Window Schedules

(g) Hardware sets using BHMA designations

(h) Composite floor plan showing all pre-wired workstations

(i) Structural Interior Design (SID) package: See ATTACHMENT A for specific requirements

(j) Furniture, Fixtures & Equipment (FF&E) design package: See ATTACHMENT B for specific requirements

(k) Air Barrier Design: Details of all Air Barrier components, (i.e. window flashing details, penetrations in air barrier details, door flashing details, roofing/ceiling barrier interface details and etc.)

3.5.8.4. Structural Systems. Include:

(a) Drawings showing principal members for roof and floor framing plans as applicable

(b) Foundation plan showing main foundation elements where applicable

(c) Typical sections for roof, floor, and foundation conditions

3.5.8.5. Plumbing Systems

(a) Show locations and general arrangement of plumbing fixtures and major equipment

(b) Plan and isometric riser diagrams of all areas including hot water, cold water, waste and vent piping. Include natural gas (and meter as required), (natural gas and meter as required), (LP gas), (fuel oil) and other specialty systems as applicable.

(c) Include equipment and fixture connection schedules with descriptions, capacities, locations, connection sizes and other information as required

3.5.8.6. HVAC Systems

(a) Mechanical Floor Plans: The floor plans shall show all principle architectural features of the building which will affect the mechanical design. The floor plans shall also show the following:

(1) Room designations.

(2) Mechanical legend and applicable notes.

(3) Location and size of all ductwork and piping.

(4) Location and capacity of all terminal units (i.e., registers, diffusers, grilles, hydronic baseboards).

(5) Pre-Fabricated Paint Spray Booth (where applicable to project scope)

(6) Paint Preparation Area (where applicable to project scope)

(7) Exhaust fans and specialized exhaust systems.

(8) Thermostat location.

(9) Location of heating/cooling plant (i.e., boiler, chiller, cooling tower, etc).

(10) Location of all air handling equipment.

(11) Air balancing information.

(12) Flue size and location.

(13) Piping diagram for forced hot water system (if used).

(b) Equipment Schedule: Provide complete equipment schedules. Include:

(1) Capacity

(2) Electrical characteristics

(3) Efficiency (if applicable)

(4) Manufacturer's name

(5) Optional features to be provided

(6) Physical size

(7) Minimum maintenance clearances

(a) Details: Provide construction details, sections, elevations, etc., only where required for clarification of methods and materials of design.

(b) HVAC Controls: Submit complete HVAC controls equipment schedules, sequences of operation, wiring and logic diagrams, Input/Output Tables, equipment schedules, and all associated information. See the Statement of Work for additional specific requirements.

3.5.8.7. Fire Protection and Life Safety.

(a) Provide plan for each floor of each building that presents a compendium of the total fire protection features being incorporated into the design. Include the following types of information:

(1) The location and rating of any fire-resistive construction such as occupancy separations, area separations, exterior walls, shaft enclosures, corridors, stair enclosures, exit passageways, etc.

(2) The location and coverage of any fire detection systems

(3) The location and coverage of any fire suppression systems (sprinkler risers, standpipes, etc.)

(4) The location of any other major fire protection equipment

(5) Indicate any hazardous areas and their classification

(6) Schedule describing the internal systems with the following information: fire hazard and occupancy classifications, building construction type, GPM/square foot sprinkler density, area of operation and other as required

(b) Working plans and all other materials submitted shall meet NFPA 13 requirements, with respect to required minimum level of detail.

3.5.8.8. Elevators. Provide:

(a) Description of the proposed control system

(b) Description, approximate capacity and location of any special mechanical equipment for elevators.

3.5.8.9. Electrical Systems.

(a) Electrical Floor Plan(s): Show all principle architectural features of the building which will affect the electrical design. Show the following:

(1) Room designations.

(2) Electrical legend and applicable notes.

(3) Lighting fixtures, properly identified.

(4) Switches for control of lighting.

(5) Receptacles.

(6) Location and designation of panelboards. Clearly indicate type of mounting required (flush or surface) and reflect accordingly in specifications.

(7) Service entrance (conduit and main disconnect).

(8) Location, designation and rating of motors and/or equipment which requires electrical service. Show method of termination and/or connection to motors and/or equipment. Show necessary junction boxes, disconnects, controllers (approximate only), conduit stubs, and receptacles required to serve the motor and/or equipment.

(b) Building Riser Diagram(s) (from pad-mounted transformer to unit load center panelboard): Indicate the types and sizes of electrical equipment and wiring. Include grounding and metering requirements.

(c) Load Center Panelboard Schedule(s): Indicate the following information:

(1) Panelboard Characteristics (Panel Designation, Voltage, Phase, Wires, Main Breaker Rating and Mounting.

(2) Branch Circuit Designations.

(3) Load Designations.

(4) Circuit Breaker Characteristics. (Number of Poles, Trip Rating, AIC Rating)

(5) Branch Circuit Connected Loads (AMPS).

(6) Special Features

(d) Lighting Fixture Schedule(s): Indicate the following information:

(1) Fixture Designation.

(2) General Fixture Description.

(3) Number and Type of Lamp(s).

(4) Type of Mounting.

(5) Special Features.

(e) Details: Provide construction details, sections, elevations, etc. only where required for clarification of methods and materials of design.

3.5.8.10. Electronic Systems including the following responsibilities:

(a) Fire Detection and Alarm System. Design shall include layout drawings for all devices and a riser diagram showing the control panel, annunciator panel, all zones, radio transmitter and interfaces to other systems (HVAC, sprinkler, etc.)

(b) Fire Suppression System Control. Specify all components of the Fire Suppression (FS) System in the FS section of the specifications. Clearly describe how the system will operate and interact with other systems such as the fire alarm system. Include a riser diagram on the drawings showing principal components and interconnections with other systems. Include FS system components on drawing legend. Designate all components shown on floor plans “FS system components” (as opposed to “Fire Alarm components”). Show location of FS control panels, HVAC control devices, sensors, and 120V power panel connections on floor plans. Indicate zoning of areas by numbers (1, 2, 3) and detectors sub-zoned for cross zoning by letter designations (A and B). Differentiate between ceiling mounted and under floor detectors with distinct symbols and indicate sub-zone of each.

(c) Public Address System

(d) Special Grounding Systems. Completely reflect all design requirements in the specifications and drawings. Specifications shall require field tests (in the construction phase), witnessed by the Government, to determine the effectiveness of the grounding system. Include drawings showing existing construction, if any.

(e) Cathodic Protection.

(f) Intrusion Detection, Card Access System

(g) Central Control and Monitoring System

(h) Mass Notification System

(i) Electrical Power Distribution Systems

3.5.8.11. Separate detailed Telecommunications drawings for Information Systems including the following responsibilities:

(a) Telecommunications Cabling

(b) Supporting Infrastructure

(c) Outside Plant (OSP) Cabling - Campus or Site Plans - Exterior Pathways and Inter-Building Backbones

(d) Include a layout of the voice/data outlets (including voice only wall & pay phones) on telecommunication floor plan drawing, location of SIPRNET data outlets (where applicable), and a legend and symbol definition to indicate height above finished floor. Show size of conduit and cable type and size on Riser Diagram. Do not show conduit runs between backboard and outlets on the floor plans. Show underground distribution conduit and cable with sizing from point of presence to entrance facility of building.

(e) Layout of complete building per floor - Serving Zone Boundaries, Backbone Systems, and Horizontal Pathways including Serving Zones Drawings - Drop Locations and Cable ID's

(f) Communication Equipment Rooms - Plan Views - Tech and AMEP/Elevations - Racks and Walls. Elevations with a detailed look at all telecomm rooms. Indicate technology layout (racks, ladder-racks, etc.), mechanical/electrical layout, rack elevation and backboard elevation. They may also be an enlargement of a congested area of T1 or T2 series drawing.

3.6. FINAL DESIGN REVIEWS AND CONFERENCES

A final design review and review conference will be held upon completion of final design at the project installation, or – where equipment is available - by video teleconference or a combination thereof, for any design package to receive Government acceptance to allow release of the design package for construction. For smaller separate design packages, the parties may agree on alternative reviews and conferences (e.g., conference calls and electronic file sharing, etc.) through the Partnering process. Include the final design conference in the project schedule and shall indicate what part of the design work is at 100% completion. The final design conference will be held after the Government has had seven (7) calendar days after receipt of the submission to review the final design package and supporting data. For smaller packages, especially those involving only one or a few design disciplines the parties may agree on a shorter period.

3.7. FINAL DESIGN REQUIREMENTS

Final design deliverables for a design package shall consist of 100% complete drawings, specifications, submittal register and design analyses for Government review and acceptance. The 100% design submission shall consist of drawings, specifications, updated design analyses and any permits required by the contract for each package submitted. In order to expedite the final design review, prior to the conference, ensure that the design configuration management data and all review comment resolutions are up-to-date. Include the 100% SID and 100% FF&E binders for government approval. The Contractor shall have performed independent technical reviews (ITR's) and back-checks of previous comment resolutions, as required by Section 01 45 04.00 10 CONTRACTOR QUALITY CONTROL, including providing documentation thereof. Use DrChecks or other acceptable comment tracking system during the ITR and submit the results with each final design package

3.7.1. Drawings

3.7.1.1. Submit drawings complete with all contract requirements incorporated into the documents to provide a 100% design for each package submitted.

3.7.1.2. Prepare all drawings with the Computer-Aided Design and Drafting (CADD)/Computer-Aided Design (CAD) system, organized and easily referenced electronically, presenting complete construction information.

3.7.1.3. Drawings shall be complete. The Contractor is encouraged to utilize graphics, views, notes, and details which make the drawings easier to review or to construct but is also encouraged to keep such materials to those that are necessary.

3.7.1.4. Provide detail drawings that illustrate conformance with the contract. Include room finish schedules, corresponding color/finish/special items schedules, and exterior finish schedules that agree with the submitted SID binders.

3.7.1.5. The design documents shall be in compliance with the latest version of the A/E/C CAD Standard, available at https://cadbim.usace.army.mil/CAD. Use the approved vertical Corps of Engineers title blocks and borders on all drawings with the appropriate firm name included within the title block area.

3.7.1.6. CAD System and Building Information Modeling (BIM) (NOTE: If this is a Single Award or Multiple Award, Indefinite Delivery/Indefinite Quantity Contract, this information will be provided for each task order.)

All CAD files shall be fully compatible with MicroStation V8 or higher. Save all design CAD files as MicroStation V8 or higher files. All submitted BIM Models and associated Facility Data shall be fully compatible with Autodesk Revit 9.0 or higher file formats.

(a) CAD Data Final File Format: During the design development capture geo-referenced coordinates of all changes made to the existing site (facility footprint, utility line installations and alterations, roads, parking areas, etc) as a result of this contract. There is no mandatory methodology for how the geo-referenced coordinates will be captured, however, Engineering and Construction Bulletin No. 2006-15, Subject: Standardizing Computer Aided Design (CAD) and Geographic Information Systems (GIS) Deliverables for all Military Design and Construction Projects identifies the format for final as-built drawings and data sets to be delivered to the government. Close-out requirements at the as-built stage; require final geo-referenced GIS Database of the new facility along with all exterior modifications. The Government will incorporate this data set into the Installation's GIS Masterplan or Enterprise GIS System. See also, Section 01 78 02.00 10 Closeout Submittals.

(b) Electronic Drawing Files: In addition to the native CAD design files, provide separate electronic drawing files (in editable CAD format and Adobe Acrobat PDF version 7.0 or higher) for each project drawing.

(c) Each file (both CAD and PDF) shall represent one complete drawing from the drawing set, including the date, submittal phase, and border. Each drawing file shall be completely independent of any data in any other file, including fonts and shapes not included with the basic CAD software program utilized. Fonts that are not included as part of the default CAD software package installation or recognized as an allowable font by the A/E/C CAD Standard are not acceptable in delivered CAD files. All displayed graphic elements on all levels of the drawing files shall be part of the project drawing image. The drawing files shall not contain any graphic element that is not part of the drawing image.

(d) Deliver BIM Model and associated Facility Data files in their native format. At a minimum, BIM files shall address major architecture design elements, major structural components, mechanical systems and electrical/communication distribution and elements as defined in Attachment F. See Attachment F for additional BIM requirements.

(e) Drawing Index: Provide an index of drawings sheet in CAD as part of the drawing set, and an electronic list in Microsoft Excel of all drawings on the CD. Include the electronic file name, the sheet reference number, the sheet number, and the sheet title, containing the data for each drawing.

(f) Hard Copies: Plot submitted hard copy drawings directly from the "electronic drawing files" and copy for quantities and sizes indicated in the distribution list at the end of this specification section. The Designers of Record shall stamp, sign and date original hard copy sheets as Released For Construction, and provide copies for distribution from this set.

3.7.2. Design Analyses

3.7.2.1. The designers of record shall update, finalize and present design analyses with calculations necessary to substantiate and support all design documents submitted.

3.7.2.2. The responsible DOR shall stamp, sign and date the design analysis. Identify the software used where, applicable (name, version, vendor). Generally, provide design analyses, individually, in an original (file copy) and one copy for the assigned government reviewer.

3.7.2.3. All disciplines review the LEED design analysis in conjunction with their discipline-specific design analysis; include a copy of the separable LEED design analysis in all design analysis submittals.

3.7.2.4. Do not combine multi-disciplined volumes of design-analysis, unless multiple copies are provided to facilitate multiple reviewers (one copy per each separate design analysis included in a volume).

3.7.3. Specifications

Specifications shall be 100% complete and in final form.

3.7.4. Submittal Register

Prepare and update the Submittal Register and submit it with the 100% design specifications (see Specification Section 01 33 00, SUBMITTAL PROCEDURES) with each design package. Include the required submittals for each specification section in a design package in the submittal register.

3.7.5. Preparation of DD Form 1354 (Transfer of Real Property)

This form itemizes the types, quantities and costs of various equipment and systems that comprise the project, for the purpose of transferring the new construction project from the Corps Construction Division to the Installation's inventory of real property. The Government will furnish the DB Contractor's design manager a DD Form 1354 checklist to use to produce a draft Form 1354. Submit the completed checklist and prepared draft Form DD 1354 with the 100% design in the Design Analysis. The Corps will use these documents to complete the final DD 1354 upon completion of construction.

3.7.6. Acceptance and Release for Construction

3.7.6.1. At the conclusion of the Final Design Review (after resolutions to the comments have been agreed upon between DOR and Government reviewers), the Contracting Officer or the ACO will accept the Final Design Submission for the design package in writing and allow construction to start for that design package. The Government may withhold acceptance until all major corrections have been made or if the final design submission requires so many corrections, even though minor, that it isn't considered acceptably complete.

3.7.6.2. Government review and acceptance of design submittals is for contract conformance only and shall not relieve the Contractor from responsibility to fully adhere to the requirements of the contract, including the Contractor’s accepted contract proposal, or limit the Contractor’s responsibility of design as prescribed under Special Contract Requirement: “Responsibility of the Contractor for Design” or limit the Government’s rights under the terms of the contract. The Government reserves the right to rescind inadvertent acceptance of design submittals containing contract deviations not separately and expressly identified in the submittal for Government consideration and approval.

3.8. DESIGN COMPLETE CONSTRUCTION DOCUMENT REQUIREMENTS

After the Final Design Submission and Review Conference and after Government acceptance of the Final Design submission, revise the design documents for the design package to incorporate the comments generated and resolved in the final review conference, perform and document a back-check review and submit the final, design complete documents. Label the final design complete documents “FOR CONSTRUCTION” or use similar language. In addition to the final drawings and specifications, the following deliverables are required for distribution and field use. The deliverable includes all documentation and supporting design analysis in final form, as well as the final review comments, disposition and the back-check. As part of the quality assurance process, the Government may perform a back-check of the released for construction documentation. Promptly correct any errors or omissions found during the Government back-check. The Government may withhold retainage from progress payments for work or materials associated with a final design package until this submittal has been received and the Government determines that it is complete.

3.9. SUBMITTAL DISTRIBUTION, MEDIA AND QUANTITIES

3.9.1. Submittal Distribution and Quantities

General: The documents which the Contractor shall submit to the Government for each submittal are listed and generally described in preceding paragraphs in this Section. Provide copies of each design submittal and design substantiation as follows (NOTE: If this is a Single Award or Multiple Award, Indefinite Delivery/Indefinite Quantity Contract, this information will be provided for each task order):

Activity and Address	Drawing Size (Full Size) **22x34** Full Sets/ *Partial Sets	Design Analyses & Specs Full Sets/ *Partial Sets	Drawing Size (Half Size) **11x17** Full Sets/ *Partial Sets	Non-BIM Data CD-ROM or DVD as Necessary (PDF& **.dgn**)	Furniture Submittal (Per Attachment B)	Structural Interior Design Submittal	BIM Data DVD (Per Attach F)
Commander, U.S.Army Engineer District **[Not Supplied - DistrictInfoGeneral : CONSTRUCTION_DISTRICT]**	0/0	6/0	6/0	6	1	6	0
Commander, U.S.Army Engineer District, Center of Standardization **[Not Supplied - SubmittalReqDistribution : COS]**	0/0	0/0	0/0	0	0	0	0
Installation	2/0	4/0	4/0	4	2	4	0
U.S.Army Corps of Engineers Construction Area Office	2/0	4/0	4/0	4	1	4	0
Information Systems Engineering Command (ISEC)	0/0	0/0	0/0	1	*Partial Set (Work Station/System Furniture- IT Details)	N/A	1
Huntsville Engineer & Support Center, Central Furnishings Program	N/A	N/A	N/A	N/A	1 Interim/Refer to attachment B for the final submission Qty	N/A	N/A
Other Offices	0/0	0/0	0/0	0	N/A	0	0

***NOTE: For partial sets of drawings, specifications and design analyses, see paragraph 3.9.3.3, below.**

****NOTE: When specified below in 3.9.2, furnish Installation copies of Drawings as paper copies, in lieu of the option to provide secure web-based submittals.**

3.9.2. Web based Design Submittals

Except for full or half-sized drawings for Installation personnel, as designated in the Table above, Web based design submittals will be acceptable as an alternative to the paper copies listed in the Table above, provided a single hard-copy PDF based record set is provided to the Contracting Officer for record purposes. Where the contract requires the Contractor to submit documents to permitting authorities, still provide those authorities paper copies (or in an alternate format where required by the authority). Web based design submittal information shall be provided with adequate security and availability to allow unlimited access those specifically authorized to Government reviewers while preventing unauthorized access or modification. File sizes must be of manageable size for reviewers to quickly download or open on their computers. As a minimum, drawings shall be full scale on American National Standards Institute (ANSI) D sheets (34" x 22"). In addition to the optional website, provide the BIM data submission on DVD to each activity and address noted above in paragraph 3.9.1 for each BIM submission required in Attachment F.

3.9.3. Mailing of Design Submittals

3.9.3.1. Mail all design submittals to the Government during design and construction, using an overnight mailing service. The Government will furnish the Contractor addresses where each copy shall be mailed to after award of the contract (or individual task order if this is an indefinite delivery/indefinite quantity, task order contract). Mail the submittals to four (4) different addresses. Assemble drawing sheets, specs, design analyses, etc. into individual sets; do not combine duplicate pages from individual sets so that the government has to assemble a set.

3.9.3.2. Each design submittal shall have a transmittal letter accompanying it indicating the date, design percentage, type of submittal, list of items submitted, transmittal number and point of contact with telephone number.

3.9.3.3. Provide partial sets of drawings, specifications, design analyses, etc., as designated in the Table in paragraph 3.9.1, to those reviewers who only need to review their applicable portions of the design, such as the various utilities. The details of which office receives what portion of the design documentation will be worked out after award.

3.10. AS-BUILT DOCUMENTS

Provide as-built drawings and specifications in accordance with Section 01 78 02.00 10, CLOSEOUT SUBMITTALS. Update LEED design phase documentation during construction as needed to reflect construction changes and advancing project completion status (example - Commissioning Plan updates during construction phase) and include updated LEED documentation in construction closeout submittal.

ATTACHMENT A
STRUCTURAL INTERIOR DESIGN (SID) REQUIREMENTS

1.0 GENERAL INFORMATION

Structural Interior Design includes all building related elements and components generally part of the building itself, such as wall finishes, ceilings finishes, floor coverings, marker/bulletin boards, blinds, signage and built in casework. Develop the SID in conjunction with the furniture footprint.

2.0 STRUCURAL INTERIOR DESIGN (SID) REQUIREMENTS FOR THE INTERIM AND FINAL DESIGN SUBMITTALS

2.1. FORMAT AND SCHEDULE

Prepare and submit for approval an interior and exterior building finishes scheme for an interim design submittal. The DOR shall meet with and discuss the finish schemes with the appropriate Government officials prior to preparation of the schemes to be presented. Present original sets of the schemes to reviewers at an interim design conference.

At the conclusion of the interim phase, after resolutions to the comments have been agreed upon between DOR and Government reviewers, the Contractor may proceed to final design with the interior finishes scheme presented.

The SID information and samples are to be submitted in 8 ½” x 11” format using three ring binders with pockets on the inside of the cover. When there are numerous pages with thick samples, use more than one binder. Large D-ring binders are preferred to O-ring binders. Use page protectors that are strong enough to keep pages from tearing out. Anchor large or heavy samples with mechanical fasteners, Velcro, or double-faced foam tape rather than rubber cement or glue. Fold out items must have a maximum spread of 25 ½”. Provide cover and spine inserts sheets identifying the document as “Structural Interior Design” package. Include the project title and location, project number, Contractor/A/E name and phone number(s), submittal stage and date.

Design submittal requirements include, but are not limited to:

2.1.1. Narrative of the Structural Interior Design Objectives

The SID shall include a narrative that discusses the building related finishes. Include topics that relate to base standards, life safety, sustainable design issues, aesthetics, durability and maintainability, discuss the development and features as they relate to the occupants requirements and the building design.

2.1.2. Interior Color Boards

Identify and key each item item on the color boards to the contract documents to provide a clear indication of how and where each item will be used. Arrange finish samples to the maximum extent possible by room type in order to illustrate room color coordination. Label all samples on the color boards with the manufacturer’s name, patterns and colors name and number. Key or code samples to match key code system used on contract drawings.

Material and finish samples shall indicate true pattern, color and texture. Provide photographs or colored photocopies of materials or fabrics to show large overall patterns in conjunction with actual samples to show the actual colors. Finish samples must be large enough to show a complete pattern or design where practical.

Color boards shall include but not be limited to original color samples of the following:

All walls finishes and ceiling finishes, including corner guards, acrylic wainscoting and wall guards/chair rail finishes

All tile information, including tile grout color and tile patterns.

- All flooring finishes, including patterns.
- All door, door frame finishes and door hardware finishes
- All signage, wall base, toilet partitions, locker finishes and operable/folding partitions and trim
- All millwork materials and finishes (cabinets, counter tops, etc.)
- All window frame finishes and window treatments (sills, blinds, etc.)

Color board samples shall reflect all actual finish textures, patterns and colors required as specified. Patterned samples shall be of sufficient size to adequately show pattern and its repeat if a repeat occurs.

2.1.3. Exterior Color Boards

Prepare exterior finishes color boards in similar format as the interior finishes color boards, for presentation to the reviewers during an interim design conference. Provide original color samples of all exterior finishes including but not limited to the following:

- All Roof Finishes
- All Brick and Cast Stone Samples
- All Exterior Insulation and Finish Samples
- All Glass Color Samples
- All Exterior Metals Finishes
- All Window & Door Frame Finishes
- All Specialty Item Finishes, including trim

Identify each item on the exterior finishes color boards and key to the building elevations to provide a clear indication of how and where each item will be used.

2.2. STRUCTURAL INTERIOR DESIGN DOCUMENTS

2.2.1. General

Structural interior design related drawings must indicate the placement of extents of SID material, finishes and colors and must be sufficiently detailed to define all interior work. The following is a list of minimum requirements:

2.2.2. Finish Color Schedule

Provide finish color schedule(s) in the contract documents. Provide a finish code, material type, manufacturer, series, and color designations. Key the finish code to the color board samples and drawings.

2.2.3. Interior Finish Plans

Indicate wall and floor patterns and color placement, material transitions and extents of interior finishes.

2.2.4. Furniture Footprint Plans

Provide furniture footprint plans showing the outline of all freestanding and systems furniture for coordination of all other disciplines.

2.2.5. Interior Signage

Include interior signage plans or schedules showing location and quantities of all interior signage. Key each interior sign to a quantitative list indicating size, quantity of each type and signage text.

2.2.6. Interior Elevations, Sections and Details

Indicate material, color and finish placement.

ATTACHMENT B
FURNITURE, FIXTURES & EQUIPMENT (FF&E) REQUIREMENTS

1.0 FF&E REQUIREMENTS FOR THE INTERIM AND FINAL DESIGN SUBMITTALS

1.1. FORMAT AND SCHEDULE

Prepare and submit for approval a comprehensive FF&E scheme for an interim design submittal. The Contractor's interior designer, NOT A FURNITURE DEALER, shall develop the design. FF&E is the selection, layout, specification and documentation of furniture and includes but is not limited to workstations, seating, tables, storage and shelving, filing, trash receptacles, clocks, framed artwork, artificial plants, and other accessories. Contract documentation is required to facilitate pricing, procurement and installation. The FF&E package is based on the furniture footprint developed in the Structural Interior Design (SID) portion of the interior design. Develop the FF&E package concurrently with the building design to ensure that there is coordination between the electrical outlets, switches, J-boxes, communication outlets and connections, and lighting as appropriate. In addition, coordinate layout with other building features such as architectural elements, thermostats, location of TV's, GF/GI equipment (for example computers, printers, copiers, shredders, faxes), etc. Locate furniture in front of windows only if the top of the item falls below the window and unless otherwise noted, do not attach furniture including furniture systems to the building. If project has SIPRNET and/or NIPRNET, coordinate furniture layout with SIPRNET and NIPRNET separation requirements. Verify that access required by DOIM for SIPRNET box and conduit is provided. The DOR shall interview appropriate Government personnel to determine FF&E requirements for furniture and furnishings prior to preparation of the scheme to be presented. Determine FFE items and quantities by, but not limited to: (1) the number of personnel to occupy the building, (2) job functions and related furniture/office equipment to support the job function, (3) room functions, (4) rank and grade. Present original sets of the scheme to reviewers at an interim design conference upon completion of the interim architectural submittal or three months prior to the submittal of the final FF&E package (whichever comes first).

Design may proceed to final with the FF&E scheme presented at the conclusion of the interim phase, after resolutions to the comments have been agreed upon between DOR and Government reviewers.

Provide sixcopies of the electronic versions of all documents upon completion of the final architectural submittal or ten months prior to the contract completion date (whichever comes first), to ensure adequate time for furniture acquisition. Provide six compact disks with all drawings files needed to view the complete drawings unbound and in the latest version AutoCAD. Provide six additional compact disks of all text documents in Microsoft Word or Excel..

Submit four copies of the final and complete FF&E information and samples in 8 ½" x 11" format using three ring binders with pockets on the inside of the cover upon completion of the final architectural submittal or ten months prior to the contract completion date (whichever comes first). Use more than one binder when there are numerous pages with thick samples. Large D-ring binders are preferred to O-ring binders. Use page protectors that are strong enough to keep pages from tearing out for upholstery and finish boards. Anchor large or heavy samples with mechanical fasteners, Velcro, or double-faced foam tape rather than rubber cement or glue. Fold out items must have a maximum spread of 25 ½". Provide cover and spine inserts sheets identifying the document as "Furniture, Fixtures & Equipment" package and include the project title and location, project number, Contractor/A/E name and phone number(s), submittal stage and date.

Design submittal requirements include, but are not limited to:

1.1.1. Narrative of Interior Design Objectives

Provide a narrative description of the furniture, to include functional, safety and ergonomic considerations, durability, sustainability, aesthetics, and compatibility with the building design.

1.1.2. Furniture Order Form

Prepare one Furnishings Order Form for each item specified in the design. This form identifies all information required to order each individual item. In addition to the project name and location, project number, and submittal phase, the order form must include:

(a) Furniture item illustration and code

(b) Furniture item name

(c) Job name, location, and date

(d) General Services Administration (GSA) FSC Group, part, and section

(e) GSA Contract Number, Special Item Number (SIN), and contract expiration date

(f) Manufacturer, Product name and Product model number or National Stock Number (NSN)

(g) Finish name and number (code to finish samples)

(h) Fabric name and number, minimum Wyzenbeek Abrasion Test double rubs (code to fabric samples)

(i) Dimensions

(j) Item location by room number and room name

(k) Quantity per room

(l) Total quantity

(m) Special instructions for procurement ordering and/or installation (if applicable)

(n) Written Product Description: include a non-proprietary paragraph listing the salient features of the item to include but not limited to:

(1) required features and characteristics

(2) ergonomic requirements

(3) functional requirements

(4) testing requirements

(5) furniture style

(6) construction materials

(7) minimum warranty

The following is an example for “m” features and characteristics, ergonomic requirements and functional requirements:

Chair Description:

(1) Mid-Back Ergonomic Task Chair

(2) Pneumatic Gaslift; Five Star Base

(3) Mesh Back; Upholstered Seat

(4) Height and Width Adjustable Task Arms:

a. Arm Height: 6”- 11” (+-1/2”)

b. Arm Width: 2”– 4” adjustment

(5) Height Adjustable Lumbar Support

(6) Adjustable Seat Height 16”-21” (+- 1”)

(7) Sliding Seat Depth Adjustment 15”-18” (+-1”)

(8) Standard Hard Casters (for carpeted areas)

(9) Overall Measurements:

a. Overall width: 25” - 27”

b. Overall depth: 25”– 28”

(10) Must have a minimum of the following adjustments (In addition to the above):

a. 360 Degree Swivel

b. Knee-Tilt with Tilt Tension

c. Back angle

d. Forward Tilt

e. Forward Tilt and Upright Tilt Lock

For projects with systems furniture, also provide a written description of the following minimum requirements:

(1) Type furniture systems (panel, stacking panels, spine wall, desk based system, or a combination)

(2) Minimum noise reduction coefficient (NRC)

(3) Minimum sound transfer coefficient (STC)

(4) Minimum flame spread and smoke development

(5) UL testing for task lighting and electrical system

(6) Panel widths and heights and their locations (this may be done on the drawings)Worksurface types and sizes (this may be done on the drawings)

(7) Worksurface edge type

(8) Varying panel/cover finish materials and locations (locations may be shown on the drawings)

(9) Storage requirements

(10) Keyboard requirements

(11) Lock and keying requirements

(12) Accessory components (examples: tack boards, marker boards, paper management)

(13) Electrical and communication raceway requirement; type, capacity and location (base, beltline, below and/or above beltline)

(14) Locations of communication cables (base, beltline, below and/or above beltline, top channel)

(15) Types of electrical outlets

(16) Types of communication jacks; provided and installed by others

(17) Locations of electrical outlets and communication jacks (this may be done on the drawings)

(18) Type of cable (examples: Cat. 5, Cat. 6, fiber optic; UTP or STP, etc.) system needs to support; provided and installed by others

1.1.3. Manufacturer & Alternate Manufacturer List

Provide a table consisting of all the major furniture items in the order forms and two alternate manufacturers for each item. ALTERNATE MANUFACTURER ITEMS MUST BE SELECTED FROM

GSA SCHEDULE AND MEET ALL THE SALIENT FEATURES OF THE ORIGINALLY SPECIFIED ITEM. Provide manufacturer name, address, telephone number, product series and product name for each item and the two alternate items. Major furniture items include, but are not limited to, casegoods, furniture systems, seating, and tables. Organize matrix by item code and item name.

1.1.4. FF&E Procurement List

Provide a table that lists all FF&E furniture, mission unique equipment and building Contractor Furnished/Contractor Installed (CF/CI) items. Give each item a code and name and designate whether item will be procured as part of the FF&E furniture, mission unique equipment or the building construction contract. Use the item code to key all FF&E documents including location plans, color boards, data sheets, cost estimate, etc. Divide the FF&E package into different sections based on this listing, applies to order forms and cost estimates.

1.1.5. Points of Contact (POCs)

Provide a comprehensive list of POCs needed to implement the FF&E package. This would include but not be limited to appropriate project team members, using activity contacts, interior design representatives, construction contractors and installers involved in the project. In addition to name, address, phone, fax and email, include each contact's job function. Divide the FF&E package into different sections based on this listing, applies to order forms and cost estimates.

1.1.6. Color Boards

Provide color boards for all finishes and fabrics for all FF&E items. Finishes to be included but not limited to paint, laminate, wood finish, fabric, etc.

1.1.7. Itemized Furniture Cost Estimate

Provide an itemized cost estimate of furnishings keyed to the plans and specifications of products included in the package. This cost estimate should be based on GSA price schedules. The cost estimate must include separate line items for general contingency, installation, electrical hook-up for systems furniture or other furniture requiring hardwiring by a licensed electrician, freight charges and any other related costs. Installation and freight quotes from vendors should be used in lieu of a percentage allowance when available. Include a written statement that the pricing is based on GSA schedules. An estimate developed by a furniture dealership may be provided as support information for the estimate, but must be separate from the contractor provided estimate.

1.2. INTERIOR DESIGN DOCUMENTS

1.2.1. Overall Furniture and Area Plans

Provide floor Plans showing locations and quantities of all freestanding, and workstation furniture proposed for each floor of the building. Key each room to a large scale Furniture Placement Plan showing the furniture configuration, of all furniture. Provide enlarged area plans with a key plan identifying the area in which the building is located. Key all the items on the drawings by furniture item code. Do not provide manufacturer specific information such as product names and numbers on drawings, Drawings shall be non-proprietary. This is typical for FFE on all plans, including those mentioned below. Coordinate the overall furniture and area plans with the Life Safety Code Review to ensure adequate clearances are provided for egress. Provide a narrative of this coordination to accompany the Furniture and Area plans.

1.2.2. Workstation Plans

Show each typical workstation configuration in plan view. In addition, provide either elevations or an isometric view. Drawings shall illustrate panels and all major components for each typical workstation configuration. Identify workstations using the same numbering system as shown on the project drawings. Key components to a legend on each sheet which identifies and describes the components along with dimensions. Provide the plan, elevations and isometric of each typical workstation together on the same drawing sheet.

1.2.3. Panel Plans

Show panel locations and critical dimensions from finished face of walls, columns, panels including clearances and aisle widths. Key panel assemblies to a legend which shall include width, height, configuration of frames, panel fabric and finishes (if there are different selections existing within a project), powered or non-powered panel and wall mount locations.

1.2.4. Desk Plans

Provide typical free standing desk configurations in plan view. In addition, provide either elevation or an isometric view and identify components to clearly represent each desk configuration.

1.2.5. Reflected Ceiling Plans

Provide typical plans showing ceiling finishes and heights, lighting fixtures, heating ventilation and air conditioning supply and return, and sprinkler head placement for coordination of furniture.

1.2.6. Electrical and Telecommunication Plans

Show power provisions including type and locations of feeder components, activated outlets and other electrical componentsShow locations and quantities of outlets for workstations. Clearly identify different outlets, i.e. electrical, LAN and telecommunication receptacles indicating each type proposed. Show wiring configuration, (circuiting, switching, internal and external connections) and provide as applicable.

1.2.7. Artwork Placement Plans

Provide an Artwork Placement Plan to show location of artwork, assign an artwork item code to each piece of artwork. As an alternative, artwork can be located on the Furniture Plans. Provide a schedule that identifies each piece by room name and number. Provide installation instructions; include mounting height.

1.2.8. Window Drapery Plans

Provide Interior Window Drapery Plans. Key each drapery treatment to a schedule showing color, pattern, material, drapery size and type, draw direction, location and quantities.

1.2.9. Portable Fire extinguishers:

Provide a list of all required portable fire extinguishers, with descriptions (location, size, type, etc.) and total number per type. See also attachment D, "SAMPLE FIRE PROTECTION AND LIFE SAFETY CODE REVIEW", paragraph 1.14.

1.3. FURNITURE SELECTION

1.3.1. Select furniture from the GSA Schedules. Specify furniture available open market when an item is not available on the GSA Schedules. Provide justification fort items not available on the GSA Schedules.

1.3.2. To the greatest extent possible when specifying furniture work within a manufacturer's family of furniture for selections, example: Steelcase, Turnstone, Brayton International, Metro, and Vecta are all Steelcase companies. Each alternate should also be specified from a manufacturer's family of furniture, example: first set of alternates would be specified from Knoll's family of furniture and the second from Herman Miller family of furniture. It may be necessary to make some selections from other than a manufacturer's family of furniture if costs are not reasonable for particular items, some items are not available or appropriate for the facility or the items are not on GSA Schedule. If this occurs, consider specifying product from an open line that is accessible by numerous dealerships. Select office furniture including case goods, tables, storage, seating, etc. that is compatible in style, finish and color. Select furniture that complies with ANSI/BIFMA and from manufacturer's standard product line as shown in the most recent published price list and/or amendment and not custom product.

1.4. CONSTRUCTION

1.4.1. Provide knee space at workstations and tables that is not obstructed by panels/legs that interfere with knee space of seated person and specificy modesty panels at walls to be of a height or be hinged to allow access to building wall electrical outlets and communication jacks. Provide desks, storage and tables with leveling devices to compensate for uneven floors.

1.4.2. Unless otherwise noted, specify workstations and storage of steel construction. Provide high pressure laminate worksurface tops constructed to prevent warpage (thermallyfused worksurfaces are not acceptable). Provide user friendly features such as radius edges. Do not use sharp edges and exposed connections and ensure the underside of desks, tables and worksurfaces are completely and smoothly finished. Provide abutting worksurfaces that mate closely and are of equal heights when used in side-by-side configurations in order to provide a continuous and level worksurface.

1.4.3. Drawers shall stay securely closed when in the closed position and protect wires from damage during drawer operation. Include a safety catch to prevent accidental removal when fully open

1.4.4. Unless otherwise noted, provide lockable desks and workstations, filing cabinets and storage. Key all locks within a one person office the same; key all one person offices within a building differently. If an office or open office area has more than one workstation, key all the workstations differently, but key all locks within an individual workstation the same. Use tempered glass glazing when glazing is required. Use light-emitting diode (LED)/solid state lighting where task lighting is required in furniture.

1.5. FINISHES AND UPHOLSTERY

1.5.1. Specify neutral colors for casegoods, furniture systems, storage and tables. Specify desk worksurfaces and table tops that are not too light or too dark in color and have a pattern to help hide soiling. Accent colors are allowed in break and lounge areas. Keep placement of furniture systems panel fabric accent colors to a minimum. All finishes shall be cleanable with ordinary household cleaning solutions.

1.5.2. Use manufacturer's standard fabrics; including textile manufacturers fabrics that have been graded into the furniture manufactures fabric grades and are available through their GSA Schedule. Customers Own Material (COM) can be used in headquarter buildings in command suites with executive furniture. Coordinate specific locations with Corps of Engineers Interior Designer.

1.5.3. Specify seating upholstery that meets Wyzenbeek Abrasion Test, 55,000 minimum rubs. Specify a soil retardant finish for woven fabrics if Crypton or vinyl upholstery is not provided for seating in dining areas. Use manufacturer's standard fabrics. This includes textile manufacturers fabrics that have been graded into the furniture manufactures fabric grades and are available through their GSA Schedule. Specify upholstery and finish colors and patterns that help hide soiling. Specify finishes that can be cleaned with ordinary household cleaning solutions.

1.6. ACCESSORIES

1.6.1. Specify all accessories required for completely finished furniture installation. Provide filing cabinets and storage for office supplies. Provide tack surfaces at workstations with overhead storage. Provide tackable surfaces at workstations with overhead storage.

1.6.2. Not Used.

1.6.3. Workstations are to be equipped with stable keyboard trays that have height adjustability, tilting capability, including negative tilt, have a mouse pad at same height as the keyboard tray that can accommodate both left and right handed users, and retractable under worksurface.

1.7. MISSION UNIQUE EQUIPMENT

Funding for FF&E furniture items and mission unique equipment (MUE) items are from two different sources. Separate the designs and procurement documentation for FFE items and MUE. MUE includes, but is not limited to, items such as commerical appliances, fitness equipment, IT equipment and supporting carts. The User will purchase and install mission unique equipment items, unless otherwise noted. Identify locations of known MUE items such as commercial appliances, etc. for space planning purposes.

1.8. SUSTAINABILITY

1.8.1. For all designs provided regardless of facility type, make every effort to implement all aspects of sustainability to the greatest extent possible for all the selections made in the FF&E package. This includes but is not limited to the selection of products that consider: **Material Chemistry and Safety of Inputs** (What chemicals are used in the construction of the selections?); **Recyclability** (Do the selections contain recycled content?); **Disassembly** (Can the selections be disassembled at the end of their useful life to recycle their materials?).

1.8.2. Make selections to the greatest extent possible of products that possess current McDonough Braungart Design Chemistry (MBDC) certification or other “third-party” certified Cradle to Cradle program, Forest Stewardship Council (FSC) certification, GREENGAURD certification or similar “third-party” certified products consisting of low-emitting materials.

1.9. FURNITURE SYSTEMS

1.9.1. General.

Where appropriate, design furniture systems in open office areas. Coordinate style and color of furniture systems with other storage, seating, etc. in open office areas. Minimize the number of workstation typicals and the parts and pieces required for the design to assist in future reconfiguration and inventorying.

1.9.2. Connector Systems.

Specify a connector system that allows removal of a single panel or spine wall within a typical workstation configuration without requiring disassembly of the workstation or removal of adjacent panels. Specify connector system with tight connections and continuous visual seals. When Acoustical panels are used, provide connector system with continuous acoustical seals. Specify concealed clips, screws, and other construction elements, where possible.

1.9.3. Panels and Spine Walls

Specify panels and spine walls with hinged or removable covers that permit easy access to the raceway when required but are securely mounted and cannot be accidentally dislodged under normal conditions. Panels shall be capable of structurally supporting more than 1 fully loaded component per panel per side. Raceways are to be an integral part of the panel and must be able to support lay-in cabling and have a large capacity for electrical and IT. Do not thread cables through the frame.

1.9.4. Electrical And Information/Technology (IT)

Design furniture with electrical systems that meets requirements of UL 1286 when powered panels are required and UL approved task lights that meet requirements of NFPA 70. Dependent on user requirements and Section 01 10 00, paragraph 3 requirements, it is recommended that workstation electrical and IT wiring entry come from the building walls to eliminate the use of power poles and access at the floor. Design electrical and IT systems that are easily accessed in the spine wall and panels without having to move return panels and components. Electrical and IT management will be easily accessible by removable wall covers which can be removed while workstation components are still attached. Specify connector system that has continuation of electrical and IT wiring within workstations and workstation to workstation.

1.9.5. Pedestals

Specify pedestals that are interchangeable from left to right, and right to left, and retain pedestal locking system capability.

1.10. EXECUTIVE FURNITURE

1.10.1. Design for executive furniture in command areas, coordinate specific locations with Corps of Engineers Interior Designer. Use upgraded furniture, upholsteries and finishes in command suites. This includes but is not limited to wood casegoods, seating and tables. Select executive furniture casegoods from a single manufacturer and style line, to include workstations, credenzas, filing, and storage, etc.

1.10.2. Specify furniture with wood veneer finish with mitered solid wood edge of same wood type. Other executive office furniture such as seating, tables, executive conference room furniture, etc. shall be compatible in style, finish and color with executive furniture casegoods.

1.11. SEATING

1.11.1. General

Specify appropriate chair casters and glides for the floor finish where the seating is located. All task seating shall support up to a minimum of 250 lbs.

1.11.2. Desk and Guest Seating

Select ergonomic desk chairs with casters, waterfall front, swivel, tilt, variable back lock, adjustable back height or adjustable lumbar support, pneumatic seat height adjustment, and padded, contoured upholstered seat and back. Desk and guest chair backs may be other than upholstered such as mesh fabric if it is ergonomically designed, forms to back and is comfortable. Depending on scale of desk chair provide seat pan forward and back adjustment to increase or decrease depth of seat pan. All desk chairs shall have an adjustable seat height range of 4 1/2", range to include 16 1/2-20". Select guest chairs that are compatible in style, finish and color with the desk chairs.

1.11.3. Conference Room Seating

At tables, select ergonomic conference seating with casters, non-upholstered arms, waterfall front, swivel, tilt, pneumatic seat height adjustment, and padded, contoured seat and back, unless otherwise noted.

Select arm height and/or design that allows seating to be moved up closely to the table top. Conference chair backs may be other than upholstered such as mesh fabric if it is ergonomically designed, forms to back and is comfortable. Perimeter conference chairs shall be compatible in style, finish and color with conference seating at the tables.

1.11.4. Lounge, Waiting and Reception Area Seating

Select seating with arms and cushioned, upholstered seat and back. In heavy use areas, arms shall be easily cleaned such as non-upholstered arms or upholstered arms with wood arm caps unless otherwise noted.

1.11.5. Break Room Seating

Select stackable seating that is easily cleaned. Seating shall be appropriate for table and counter heights as applicable with non-upholstered arms if arms are required. Chairs shall have metal legs and composite materials for seats.

1.12. FILING AND STORAGE.

Select storage and shelving units that meet customer’s functional load requirements for stored items. Specify counterweights for filing cabinets when required by the manufacturer for stability. File drawers shall allow only one drawer to be opened at a time. Provide heavy duty storage and shelving if information is not available.

1.13. TRAINING TABLES.

raining tables shall be reconfigurable, moveable and storable; lighter weight folding with dollies or castered as necessary. Plastic laminate self edges are unacceptable. Specify power and data requirements and dollies as required.

1.14. FURNITURE WARRANTIES.

Specify manufacturer's performance guarantees or warranties that include parts, labor and transportation as follows:

Furniture System, unless otherwise noted – 10 year minimum
Furniture System Task Lights – 2 year minimum, excluding bulbs
Furniture System Fabric – 3 year minimum
Wood Desks - 10 year minimum

Metal Desks – 12 year minimum
Seating, unless otherwise noted - 10 year minimum
Seating Mechanisms and Pneumatic Cylinders - 10 years
Seating Fabric - 3 years minimum
Wood Filing and Storage - 10 year minimum

Tables, unless otherwise noted - 10 year minimum
Table Mechanisms – 5 year minimum
Table Ganging Device - 1 year minimum
Items not listed above - 1 year minimum

ATTACHMENT C
TRACKING COMMENTS IN DRCHECKS

1.0 General

The Government and DB Contractor shall set up the project in Dr Checks. Throughout the design process, the parties shall enter, track, and back-check comments using the DrChecks system. Government and Contractor reviewers enter design review comments into DrChecks. Designers of Record shall annotate comments timely and specifically to indicate for the review conference exactly what action will be taken or why the action is not required. After the design review conference and prior to the next design submittal for the package, the DOR's will annotate those comments that require DOR action, design revision, etc. to show how and where it has been addressed in the design documents, This shall be part of the required design configuration management plan. Comments considered critical by the conference participants shall be flagged as such.

2.0 DrChecks Review Comments

The Contractor and the Government shall monitor DrChecks to assure all comments are annotated and resolved prior to the next submittal. Print and include the DrChecks comments and responses and included in the design analysis for record in the next design submittal for that package.

2.1. Upon review of comments prior to the design review conference, the DOR(s) shall identify whether they concur, non-concur, mark it "for information only" or mark it "check and resolve". Indicate exactly what action will be taken or why the action is not required.

2.2. Conference participants (reviewers) will expect coordination between Design Analysis calculations and the submitted design. Reviewers will also focus on the design submittal's satisfaction of the contract requirements.

2.3. After the conference, the DOR(s) shall formally respond to each applicable comment in DrChecks a second time prior to the next submittal, clearly indicating what action was taken and what drawing/spec/design analysis changed. Designers of Record are encouraged to directly contact reviewers to discuss and agree to the formal comment responses rather than relying only on DrChecks and review meetings to discuss comments. With the next submittal, reviewers will back-check answers to the comments against the new submittal, in addition to reviewing additional design work.

2.4. Clearly annotate in DrChecks those comments that, in the DB Contractor's opinion, require effort outside the scope of the contract. Do not proceed with work outside the contract until a modification to the contract is properly executed, if one is necessary.

3.0 DrChecks Initial Account Set-Up

To initialize an office's use of DrChecks, choose a contact person within the office to call the DrChecks Help Desk at 800-428-HELP, M-F, 8AM-5PM, Central time. This POC will be given an office password to distribute to others in the office. Individuals can then go to the hyperlink at http://www.projnet.org and register as a first time user. Upon registration, each user will be given a personal password to the DrChecks system.

3.1. Once the office and individuals are registered, the COE's project manager or lead reviewer will assign the individuals and/or offices to the specific project for review. At this point, persons assigned can make comments, annotate comments, and close comments, depending on their particular assignment.

4.0 DrChecks Reviewer Role

The Contractor is the technical reviewer and the Government is the compliance reviewer of the DB's design documents. Each reviewer enters their own comments into the Dr Checks system. To enter comments:

4.1. Log into DrChecks.

4.2. Click on the appropriate project.

4.3. Click on the appropriate review conference. An Add comment screen will appear.

4.4. Select or fill out the appropriate sections (particularly comment discipline and type of document for sorting) of the comment form and enter the comment in the space provided.

4.5. Click the Add Comment button. The comment will be added to the database and a fresh screen will appear for the next comment you have.

4.6. Once comments are all entered, exit DrChecks by choosing "My Account" and then Logout.

5.0 DrChecks Comment Evaluation (Step 1 of 2)

The role of the DOR(s) is to evaluate and respond to the comments entered by the Government's and DB Contractor's reviewers. To respond to comments:

5.1. Log into DrChecks.

5.2. Click on the appropriate project.

5.3. Under "Evaluate" click on the number under "Pending".

5.4. Locate the comments that require your evaluation. (Note: If you know the comment number you can use the Quick Pick window on your home page in DrChecks; enter the number and click on go.)

5.5. Select the appropriate evaluation radio button (concur, non-concur, for information only, or check and resolve) and respond with a brief explanation in the Discussion field. An explanation other than to say "concur" is not necessary for "Concur", but may be useful for the Design Configuration Management purposes.

5.6. Click on the Add button. The evaluation will be added to the database and a fresh screen will appear with the next comment.

5.7. Once evaluations are all entered, exit DrChecks by choosing "My Account" and then Logout.

6.0 DrChecks Comment Evaluation (Step 2 of 2)

This is where the DOR(s) respond to each applicable comment in DrChecks after the design review conference, prior to the next submittal, clearly indicating what action was taken and what drawing/spec/design analysis changed. Respond to the previous comments, following the same steps as above, adding the narrative in the discussion field.

7.0 DrChecks Back-Check

At the following design conference, (where applicable) or at some other agreed time, Government and Contractor reviewers will back-check comment annotations against newly presented documents to verify that the designers' responses are acceptable and that all revisions have been completed. Reviewers

shall either enter additional back-check comments, if necessary, or close those where actions are complete.

7.1. Log into DrChecks.

7.2. Click on the appropriate project.

7.3. Under “My Backcheck” click on the number under “Pending”.

7.4. If you agree with the designer’s response select “Close Comment” and add a closing response if desired.

7.5. If you do not agree with the designer’s response or the submittal does not reflect the response given, select “Issue Open”, enter additional information.

7.6. Click on the Add button. The back-check will be added to the database and a fresh screen will appear with the next comment.

7.7. Once back-checks are all entered, exit DrChecks by choosing “My Account” and then Logout. The design is completed and final when there are no pending comments to be evaluated and there are no pending or open comments under back-check.

ATTACHMENT D
SAMPLE FIRE PROTECTION AND LIFE SAFETY CODE REVIEW

Instructions: Use the information outlined in this document to provide the minimum requirement for development of Fire Protection and Life Safety Code submittals for all building projects. Additional and supplemental information may be used to further develop the code review. Insert N/A after criteria, which may be “not applicable”.

1.0 SAMPLE FIRE PROTECTION AND LIFE SAFETY CODE REVIEW

1.1. Project Name (insert name and location)

1.2. Applicable Codes and Standards

1.2.1. Unified Facilities Criteria (UFC): 3-600-01, Design: Fire Protection Engineering For Facilities

1.2.2. International Building Code (IBC) for fire resistance requirements, allowable floor area, building height limitations and building separation distance requirements, except as modified by UFC 3-600-01.

1.2.3. National Fire Protection Association (NFPA) 101 Life Safety Code (latest edition), for building egress and life safety and applicable criteria in UFC 3-600-01.

1.2.4. ADA and ABA Accessibllity Guidelines. For Buildings and Facilities See Section 01 10 00, Paragraph 3 for facility specific criteria.

1.3. Occupancy Classification
IBC chapters 3 and 4

1.4. Construction Type
IBC chapter 6

1.5. Area Limitations
IBC chapter 5, table 503

1.6. Allowable Floor Areas
IBC section 503, 505

1.7. Allowable area increases
IBC section 506, 507

1.8. Maximum Height of Buildings
IBC section 504

1.9. Fire-resistive substitution

1.10. Occupancy Separations
IBC table 302.3.2

1.11. Fire Resistive Requirements

1.11.1. Exterior Walls - [_____] hour rating, IBC table 601, 602

1.11.2. Interior Bearing walls - [_____] hour rating

1.11.3. Structural frame - [_____] hour rating

1.11.4. Permanent partitions - [_____] hour rating

1.11.5. Shaft enclosures - [_____] hour rating

1.11.6. Floors & Floor-Ceilings - [_____] hour rating

1.11.7. Roofs and Roof Ceilings - [_____] hour rating

1.12. Automatic Sprinklers and others used to determine the need for automatic Extinguishing Equipment, Extinguishing Systems, Foam Systems, Standpipe

1.12.1. UFC 3-600-01, chapters 4 and 6 systems, wet chemical systems, etc. State which systems are required and to what criteria they will be designed.

1.12.2. UFC 3-600-01, Appendix B Occupancy Classification. Note the classification for each room. This may be accomplished by classifying the entire building and noting exceptions for rooms that differ (E.g. The entire building is Light Hazard except boiler room and storage rooms which are [_____], etc.)

1.12.3. UFC 3-600-01, Chapter 3 Sprinkler Design Density, Sprinkler Design Area, Water Demand for Hose Streams (supply pressure and source requirements).

1.12.4. UFC 3-600-01, Chapter 4 Coverage per sprinkler head. Extended coverage sprinkler heads are not permitted.

1.12.5. Available Water Supply. Provide the results of the water flow tests showing the available water supply static pressure and residual pressure at flow. Based on this data and the estimated flow and pressure required for the sprinkler system, determine the need for a fire pump.

1.12.6. NFPA 13, Para. 8.16.4.6.1. Provide backflow preventer valves as required by the local municipality, authority, or water purveyor. Provide a test valve located downstream of the backflow preventer for flow testing the backflow preventer at full system demand flow. Route the discharge to an appropriate location outside the building.

1.13. Kitchen Cooking Exhaust Equipment

Describe when kitchen cooking exhaust equipment is provided for the project. Type of extinguishing systems for the equipment should be provided. per NFPA 96. Show all interlocks with manual release switches, fuel shutoff valves, electrical shunt trips, exhaust fans, and building alarms.

1.14. Portable Fire Extinguishers, fire classification and travel distance. per NFPA 10

1.15. Enclosure Protection and Penetration Requirements. - Opening Protectives and Through Penetrations

1.15.1. IBC Section712, 715 and Table 715.3. Mechanical rooms, exit stairways, storage rooms, janitor [_____] hour rating. IBC Table 302.1.1

1.15.2. Fire Blocks, Draft Stops, Through Penetrations and Opening Protectives

1.16. Fire Dampers. Describe where fire dampers and smoke dampers are to be used (IBC Section 716 and NFPA 90A}. State whether isolation smoke dampers are required at the air handler.

1.17. Detection Alarm and Communication. UFC 3-600-01, (Chapter 5); NFPA 101 para. 3.4 (chapters 12-42); NFPA 72

1.18. Mass Notification. Describe building/facility mass notification system (UFC 4-021-01) type and type of base-wide mass notification/communication system. State whether the visible notification appliances will be combined with the fire alarm system or kept separate. (Note: Navy has taken position to combine visible notification appliances with fire alarm).

1.19. Interior Finishes (classification). NFPA 101.10.2.3 and NFPA 101.7.1.4

1.20. Means of Egress

1.20.1. Separation of Means of Egress, NFPA 101 chapters 7 and 12-42; NFPA101.7.1.3

1.20.2. Occupant Load, NFPA101.7.3.1 and chapters 12-42.

1.20.3. Egress Capacity (stairs, corridors, ramps and doors) NFPA101.7.3.3

1.20.4. Number of Means of Egress, NFPA101.7.4 and chapters 12-42.

1.20.5. Dead end limits and Common Path of Travel, NFPA 101.7.5.1.6 and chapters 12-42.

1.20.6. Accessible Means of Egress (for accessible buildings), NFPA101.7.5.4

1.20.7. Measurement of Travel Distance to Exits, NFPA101.7.6 and chapters 12-42.

1.20.8. Discharge from Exits, NFPA101.7.7.2

1.20.9. Illumination of Means of Egress, NFPA101.7.8

1.20.10. Emergency Lighting, NFPA101.7.9

1.20.11. Marking of Means of Egress, NFPA101.7.10

1.21. Elevators, UFC 3-600-01, Chapter 6; IBC and ASME A17.1 - 2000,(Safety Code for Elevators and Escalators)

1.22. Accessibility Requirements, ADA and ABA Accessibility Guidelines for Buildings and Facilities

1.23. Certification of Fire Protection and Life Safety Code Requirements. (Note: Edit the Fire team membership if necessary). Preparers of this document certify the accuracy and completeness of the Fire Protection and Life Safety features for this project in accordance with the attached completed form(s).

1.24. Designer of Record. Certification of Fire protection and Life Safety Code Requirements. (Note: Edit the Fire team members if necessary). Preparers of this document certify the accuracy and completeness of the Fire Protection and Life Safety features of this project.

Fire Protection Engineer of Record:

_____

Signature and Stamp

Date

OR

Architect of Record:

_____

Signature and Stamp

Date

Mechanical Engineer of Record:

_____

Signature and Stamp

Date

Electrical Engineer of Record:

_____

Signature/Date

ATTACHMENT E
LEED SUBMITTALS

LEED Credit Paragraph	Contractor Check Here if Credit is Claimed	**LEED-NC v3 Submittals (OCT09)**		Provide for Credit Audit Only		Date Submitted (to be filled in by Contractor)	Government Reviewer's Use
PAR		**FEATURE**	**DUE AT**		**REQUIRED DOCUMENTATION**	**DATE**	**REV**
GENERAL							
	GENERAL - All calculations shall be in accordance with LEED 2009 Reference Guide.						
	GENERAL: Obtain excel version of this spreadsheet at http://en.sas.usace.army.mil/enWeb, "Engineering Criteria".						
	GENERAL - For all credits, narrative/comments may be added to describe special circumstances or considerations regarding the project's credit approach.						
	GENERAL - Include all required LEED drawings indicated below in contract drawings with applicable discipline drawings, labeled For Reference Only.						
	NOTE: Each submittal indicated with "**" differs from LEED certified project submittals by either having a different due date or being an added submittal not required by GBCI.						
	NOTE: Projects seeking LEED certification need only submit to GBCI whatever documentation is acceptable to GBCI (for example, licensed professional certifications). This checklist identifies what must be submitted to the Government for internal review purposes. Government review of LEED documentation in no way supercedes or modifies the requirements and rulings of of GBCI for purposes of compliance with project requirement to obtain LEED certifiaction.						
	GENERAL - Audit documentation may include but is not limited to what is indicated in this table.						
			Closeout		List of all Final Design submittals revised after final design to reflect actual closeout conditions. Revised Final Design submittals. - OR - Statement confirming that no changes have been made since final design that effect final design submittal documents.		Proj Engr (PE)
CATEGORY 1 - SUSTAINABLE SITES							
SSPR1		Construction Activity Pollution Prevention (PREREQUISITE)	**Final Design		List of drawings and specifications that address the erosion control, particulate/dust control and sedimentation control measures to be implemented.		CIV
			**Final Design		Delineation and labeling of "LEED Project site boundary" on site plan.		CIV
			**Final Design		Narrative that indicates which compliance path was used (NPDES or Local standards) and describes the measures to be implemented on the project. If a local standard was followed, provide specific information to demonstrate that the local standard is equal to or more stringent than the NPDES program.		CIV
SS1		Site Selection	Final Design		Statement confirming that project does not meet any of the prohibited criteria.		CIV
			**Final Design		Delineation and labeling of "LEED Project site boundary" on site plan.		CIV
			Final Design	X	LEED Site plan drawing that shows all proposed development, line depicting boundary of all bodies of water and/or wetlands within 100 feet of project boundary and a line depicting 5' elevation above 100 year flood line that falls within project boundary. Not required if neither condition applies.		CIV
SS2		Development Density & Community Connectivity	Final Design		Option 1: LEED Site vicinity plan showing project site and surrounding development. Show density boundary or note drawing scale.		CIV
			**Final Design		Delineation and labeling of "LEED Project site boundary" on site plan.		CIV
			Final Design		Option 1: Table indicating, for project site and all surrounding sites within density radius (keyed to site vicinity plan), site area and building area. Project development density calculation. Density radius calculation. Development density calculation within density radius.		CIV
			Final Design		Option 2: LEED Site vicinity plan showing project site, the 1/2 mile community radius, pedestrian walkways and the locations of the residential development(s) and Basic Services surrounding the project site.		CIV
			Final Design		Option 2: List (including business name and type) of all Basic Services facilities within the 1/2 mile radius, keyed to site vicinity plan.		CIV
SS3		Brownfield Redevelopment	Final Design		Narrative describing contamination and the remediation activities included in project. Include statement indicating how site was determined to be a brownfield.		CIV
			**Final Design		Delineation and labeling of "LEED Project site boundary" on site plan.		CIV
SS4.1		Alternative Transportation: Public Transportation Access	Final Design		Statement indicating which option for compliance applies. State whether public transportation is existing or proposed and, if proposed, cite source of this information.		CIV
			**Final Design		Delineation and labeling of "LEED Project site boundary" on site plan.		CIV
			Final Design		Option 1: LEED Site vicinity plan showing project site, mass transit stops and pedestrian path to them with path distance noted.		CIV
			Final Design		Option 2: LEED Site vicinity plan showing project site, bus stops and pedestrian path to them with path distance noted.		CIV
SS4.2		Alternative Transportation: Bicycle Storage & Changing Rooms	Final Design		FTE calculation. Bicycle storage spaces calculation. Shower/changing facilities calculation.		CIV
			Final Design		List of drawings that show the location(s) of bicycle storage areas. Statement indicating distance from building entrance.		CIV
			Final Design		List of drawings that show the location(s) of shower/changing facilities and, if located outside the buiding, statement indicating distance from building entrance.		ARC

LEED Credit Paragraph	Contractor Check Here if Credit is Claimed	**LEED-NC v3 Submittals (OCT09)**		Provide for Credit Audit Only		Date Submitted (to be filled in by Contractor)	Government Reviewer's Use
PAR		**FEATURE**	**DUE AT**		**REQUIRED DOCUMENTATION**	**DATE**	**REV**
SS4.3		Alternative Transportation: Low Emitting & Fuel Efficient Vehicles	Final Design		Statement indicating which option for compliance applies. FTE calculation. Statement indicating total parking capacity of site.		CIV
			**Final Design		Delineation and labeling of "LEED Project site boundary" on site plan.		CIV
			Final Design		Option 1: Low-emission & fuel-efficient vehicle calculation.		CIV
			Final Design		Option 1: List of drawings and specification references that show location and number of preferred parking spaces for low-emission & fuel-efficient vehicles and signage.		CIV
			Final Design		Option 1: Statement indicating quantity, make, model and manufacturer of low-emission & fuel-efficient vehicles to be provided. Statement confirming vehicles are zero-emission or indicating ACEEE vehicle scores.		CIV
			Final Design		Option 2: Low-emission & fuel-efficient vehicle parking calculation.		CIV
			Final Design		Option 2: List of drawings and specification references that show location and number of preferred parking spaces and signage.		CIV
			Final Design		Option 3: Low-emission & fuel-efficient vehicle refueling station calculation.		CIV
			Final Design		Option 3: List of drawings and specifications indicating location and number of refueling stations, fuel type and fueling capacity for each station for an 8-hour period.		CIV
			Closeout	X	Option 3: Construction product submittals indicating what was provided and confirming compliance with respect to fuel type and fueling capacity for each station for an 8-hour period.		CIV
SS4.4		Alternative Transportation: Parking Capacity	Final Design		Statement indicating which option for compliance applies.		CIV
			**Final Design		Delineation and labeling of "LEED Project site boundary" on site plan.		CIV
			Final Design		Option 1: Preferred parking calculation including number of spaces required, total provided, preferred spaces provided and percentage.		CIV
			Final Design		Option 2: FTE calculation. Preferred parking calculation including number of spaces provided, preferred spaces provided and percentage.		CIV
			Final Design		Options 1 and 2: List of drawings and specification references that show location and number of preferred parking spaces and signage.		CIV
			Final Design		Option 3: Narrative indicating number of spaces required and provided and describing infrastructure and support programs with description of project features to support them.		CIV
SS5.1		Site Development: Protect or Restore Habitat	**Final Design		Option 1: List of drawing and specification references that convey site disturbance limits.		CIV
			**Final Design		Delineation and labeling of "LEED Project site boundary" on site plan.		CIV
			**Final Design		Option 2: LEED site plan drawing that delineates boundaries of each preserved and restored habitat area with area (sf) noted for each.		CIV
			**Final Design		Option 2: Percentage calculation of restored/preserved habitat to total site area. List of drawings and specification references that convey restoration planting requirements.		CIV
SS5.2		Site Development: Maximize Open Space	Final Design		Option 2: LEED site plan drawing delineating boundary of vegetated open space adjacent to building with areas of building footprint and designated open space noted.		CIV
			**Final Design		Delineation and labeling of "LEED Project site boundary" on site plan.		CIV
SS6.1		Stormwater Design: Quantity Control	Final Design		Statement indicating which option for compliance applies.		CIV
			**Final Design		Delineation and labeling of "LEED Project site boundary" on site plan.		CIV
			Final Design		Option 1: Indicate pre-development and post-development runoff rate(cfs) and runoff quantity (cf) -OR - Narrative describing site conditions, measures and controls to be implemented to prevent excessive stream velocities and erosion.		CIV
			Final Design		Option 2: Indicate pre-development and post-development runoff rate(cfs) and runoff quantity (cf). Indicate percent reduction in each.		CIV
SS6.2		Stormwater Design: Quality Control	Final Design		For non-structural controls, list all BMPs used and, for each, describe the function of the BMP and indicate the percent annual rainfall treated. List all structural controls and, for each, describe the pollutant removal and indicate the percent annual rainfall treated.		CIV
			**Final Design		Delineation and labeling of "LEED Project site boundary" on site plan.		CIV
SS7.1		Heat Island Effect: Non-Roof	**Final Design		LEED site plan drawing indicating locations and quantities of each paving type, including areas of shaded pavement. Percentage calculation indicating percentage of reflective/shaded/open grid area.		CIV
			**Final Design		Delineation and labeling of "LEED Project site boundary" on site plan.		CIV

LEED Credit Paragraph	Contractor Check Here if Credit is Claimed	**LEED-NC v3 Submittals (OCT09)**		Provide for Credit Audit Only		Date Submitted (to be filled in by Contractor)	Government Reviewer's Use
PAR		**FEATURE**	**DUE AT**		**REQUIRED DOCUMENTATION**	**DATE**	**REV**
SS7.2		Heat Island Effect: Roof	Final Design		Option 1: Percentage calculation indicating percentage of SRI compliant roof area. List of drawings and specification references that convey SRI requirements and roof slopes.		ARC
			Final Design		Option 1: List of specified roof materials indicating, for each, type, manufacturer, product name and identification if known, SRI value and roof slope.		ARC
			**Closeout		Option 1: List of installed roof materials indicating, for each, manufacturer, product name and identification, SRI value and roof slope.		PE
			Closeout	X	Option 1: Manufacturer published product data or certification confirming SRI		PE
			Final Design		Option 2: Percentage calculation indicating percentage of vegetated roof area.		ARC
			Final Design		Option 3: Combined reflective and green roof calculation.		ARC
			Final Design		Option 3: List of specified roof materials indicating, for each, type, manufacturer, product name and identification if known, SRI value and roof slope.		ARC
			**Closeout		Option 3: List of installed roof materials indicating, for each, manufacturer, product name and identification, SRI value and roof slope.		PE
			Closeout	X	Option 3: Manufacturer published product data or certification confirming SRI		PE
SS8		Light Pollution Reduction	Final Design		Interior Lighting: List of drawings and specification references that convey interior lighting requirements (location and type of all installed interior lighting, location of non-opaque exterior envelope surfaces, allowing confirmation that maximum candela value from interiorfixtures does not intersect non-opaque building envelope surfaces). - OR - List of drawings and specification references that show automatic lighting controls compliance with credit requirement.		ELEC
			**Final Design		Delineation and labeling of "LEED Project site boundary" on site plan.		ELEC
			Final Design		Exterior Lighting: List of drawings and specification references that convey exterior lighting requirements (location and type of all site lighting and building façade/landscape lighting).		ELEC
			Final Design		Exterior Site Lighting Power Density (LPD): Tabulation for exterior site lighting indicating, for each location identification or description, units of measure, area or distance of the location, actual LPD using units consistent with ASHRAE 90.1, and the ASHRAE allowable LPD for that type of location. Percentage calculation of actual versus allowable LPD for all site lighting.		ELEC
			Final Design		Exterior Building Facade/Landscape Lighting Power Density (LPD): Tabulation for exterior building facade/landscape lighting indicating, for each location identification or description, units of measure, area or distance of the location, actual LPD using units consistent with ASHRAE 90.1, and the ASHRAE allowable LPD for that type of location. Percentage calculation of actual versus allowable LPD for all building facade/landscape lighting.		ELEC
			Final Design		Exterior Lighting IESNA Zone: Indicate which IESNA zone is applicable to the project.		ELEC
			Final Design		Exterior Lighting Site Lumen table indicating, for each fixture type, quantity installed, initial lamp lumens per luminaire, initial lamp lumens above 90 degrees from Nadir, total lamp lumens and total lamp lumens above 90 degrees. Percentage of site lamp lumens above 90 degrees from nadir to total lamp lumens.		ELEC
			Final Design		Exterior Lighting Narrative describing analysis used for addressing requirements for light trespass at site boundary and beyond.		ELEC
CATEGORY 2 – WATER EFFICIENCY							
WEPR1		Water Use Reduction: 20% Reduction	Final Design		Statement confirming which occupancy breakdown applies (default or special). For special occupancy breakdown, indicate source and explanation for ratio.		MEC
			Final Design		Occupancy calculation including male/female numbers for FTEs, visitors, students, customers, residential and other type occupants/users		MEC
			Final Design		Statement indicating percent of male restrooms with urinals. Statement indicating annual days of operation.		MEC

LEED Credit Paragraph	Contractor Check Here if Credit is Claimed	LEED-NC v3 Submittals (OCT09)		Provide for Credit Audit Only		Date Submitted (to be filled in by Contractor)	Government Reviewer's Use
PAR		**FEATURE**	**DUE AT**		**REQUIRED DOCUMENTATION**	**DATE**	**REV**
			Final Design		Baseline flush fixture calculation spreadsheet indicating, for each fixture type, gender, flush rate, daily uses per person for each occupant type identified in occupancy calculation and annual baseline flush fixture water usage.		MEC
			Final Design		Design case flush fixture calculation spreadsheet indicating, for each fixture type, gender, fixture manufacturer, fixture model number, flush rate, percent of occupants using this fixture type, daily uses per person for each occupant type identified in occupancy calculation and annual design case flush fixture water usage.		MEC
			Closeout	X	Manufacturer published product data or certification confirming fixture water usage.		PE
WE1.1		Water Efficient Landscaping: Reduce by 50%	Final Design		Statement indicating which option for compliance applies.		CIV
			**Final Design		Delineation and labeling of "LEED Project site boundary" on site plan.		CIV
			Final Design		Calculation indicating, for baseline and design case, total water applied, total potable water applied, total non-potable water applied. Design case percent potable water reduction. If nonpotable water is used, indicate source of nonpotable water.		CIV
			Final Design		List of landscape plan drawings.		CIV
			Final Design		Narrative describing landscaping and irrigation design strategies, including water use calculation methodology used to determine savings and, if non-potable water is used, specific information about source and available quantity.		CIV
WE1.2		Water Efficient Landscaping: No Potable Water Use or No Irrigation	Same as WE1.1		Same as WE1.1		CIV
WE2		Innovative Wastewater Technologies	Final Design		Statement confirming which option for compliance applies.		MEC
			Final Design		Statement confirming which occupancy breakdown applies (default or special). For special occupancy breakdown, indicate source and explanation for ratio.		MEC
			Final Design		Occupancy calculation including male/female numbers for FTEs, visitors, students, customers, residential and other type occupants/users		MEC
			Final Design		Statement indicating percent of male restrooms with urinals. Statement indicating annual days of operation.		MEC
			Final Design		Baseline flush fixture calculation spreadsheet indicating, for each fixture type, gender, flush rate, daily uses per person for each occupant type identified in occupancy calculation and annual baseline flush fixture water usage.		MEC
			Final Design		Design case flush fixture calculation spreadsheet indicating, for each fixture type, gender, fixture manufacturer, fixture model number, flush rate, percent of occupants using this fixture type, daily uses per person for each occupant type identified in occupancy calculation and annual design case flush fixture water usage.		MEC
			Final Design		Option 1: If onsite non-potable water is used, identify source(s), indicate annual quantity from each source and indicate total annual quantity from all onsite non-potable water sources.		MEC
			Final Design		Option 1: Summary calculation indicating baseline annual water consumption, design case annual water consumption, non-potable annual water consumption and total percentage annual water savings.		MEC
			Final Design		Option 2: Statement confirming on-site treatment of all generated wastewater to tertiary standards and all treated wastewater is either infiltrated or used on-site.		MEC
			Final Design		Option 2: List of drawing and specification references that convey design of on-site wastewater treatment features.		CIV
			Final Design		Option 2: On-site water treatment quantity calculation indicating all on-site wastewater source(s), annual quantity treated, annual quantity infiltrated and annual quantity re-used on site from each source and totals for annual quantity treated, annual quantity infiltrated and annual quantity re-used on site from all sources.		CIV
			Final Design		Option 2: Wastewater summary calculation indicating design case annual flush fixture water usage, annual on-site water treatment and percentage sewage convyance reduction.		MEC
			Final Design		Narrative describing project strategy for reduction of potable water use for sewage conveyance, including specific information on reclaimed water usage and treated wastewater usage.		MEC
WE3		Water Use Reduction: 30% - 40% Reduction	Same as WEPR1		Same as WEPR1		MEC
CATEGORY 3 – ENERGY AND ATMOSPHERE							

LEED Credit Paragraph	Contractor Check Here if Credit is Claimed	**LEED-NC v3 Submittals (OCT09)**		Provide for Credit Audit Only		Date Submitted (to be filled in by Contractor)	Government Reviewer's Use
PAR		**FEATURE**	**DUE AT**		**REQUIRED DOCUMENTATION**	**DATE**	**REV**
EAPR1		Fundamental Commissioning of the Building Energy Systems (PREREQUISITE)	**Final Design		**Owner's Project Requirements document		ALL
			**Final Design		**Basis of Design document for commissioned systems		MEC, ELEC
			**Final Design		**Commissioning Plan		MEC, ELEC
			Closeout		Statement confirming all commissioning requirements have been incorporated into construction documents.		PE
			Closeout		Commissioning Report		PE
EAPR2		Minimum Energy Performance (PREREQUISITE)	Final Design		Statement listing the mandatory provisions of ASHRAE 90.1 that project meets relative to compliance with this prerequisite and indicating which compliance path was used.		MEC ELEC ARC
			Final Design		Statement indicating which compliance path option applies.		MEC
			Final Design		Option 1: Statement confirming simulation software capabilities and confirming assumptions and methodology.		MEC
			Final Design		Option 1: General information including simulation program, principal heating source, percent new construction and renovation, weather file, climate zone and Energy Star Target Finder score.		MEC
			Final Design		Option 1: Space summary listing, for each building use, the conditioned area, unconditioned area and total area and include total area for each category		MEC
			Final Design		Option 1: List of all simulation output advisory message data and show difference between baseline and proposed design		MEC
			Final Design		Option 1: Comparison summary for energy model inputs including description of baseline and design case energy model inputs, showing both by element type		MEC
			Final Design		Option 1: Energy type summary lising, for each energy type, utility rate description, units of energy and units of demand		MEC
			Final Design		Option 1: Statement indicating whether project uses on-site renewable energy. If yes, list all sources and indicate, for each source, backup energy type, annual energy generated, rated capacity and renewable energy cost		MEC
			Final Design		Option 1: If analysis includes exceptional calculation methods, statement describing how exceptional calculation measure cost savings is determined		MEC
			Final Design		Option 1: If analysis includes exceptional calculation methods, for each exceptional calculation method indicate energy types and, for each energy type, annual energy savings, annual cost savings, and brief descriptive narrative		MEC
			Final Design		Option 1: Baseline performance rating compliance report table indicating, for each energy end use, whether it is a process load, energy type, annual and peak energy demand for all four orientations. For each orientation indicate total annual energy use for each orientation and total annual process energy use.		MEC
			Final Design		Option 1: Baseline energy cost table indicating, for each energy type, annual cost for all four orientations and building total energy cost.		MEC
			Final Design		Option 1: Proposed Design performance rating compliance report table indicating, for each energy end use, whether it is a process load, energy type, annual and peak energy demand, baseline annual and peak energy demand and percent savings. Indicate total annual energy use and total annual process energy use for both proposed design and baseline and percent savings.		MEC
			Final Design		Option 1: Proposed Design energy cost table indicating, for each energy type, annual cost for all four orientations and building total energy cost.		MEC
			Final Design		Option 1: Energy cost and consumption by energy type report indicating, for each energy type, proposed design and baseline annual use and annual cost, percent savings annual use and annual cost. Indicate for renewable energy annual energy generated and annual cost. Indicate exceptional calculations annual energy savings and annual cost savings. Indicate building total annual energy use, annual energy cost for proposed design and baseline and indicate percent savings annual energy use and annual energy cost.		MEC

LEED Credit Paragraph	Contractor Check Here if Credit is Claimed	**LEED-NC v3 Submittals (OCT09)**		Provide for Credit Audit Only		Date Submitted (to be filled in by Contractor)	Government Reviewer's Use
PAR		**FEATURE**	**DUE AT**		**REQUIRED DOCUMENTATION**	**DATE**	**REV**
			Final Design		Option 1: Compliance summaries from energy simulation software. If software does not produce compliance summaries provide output summaries and example input summaries for baseline and proposed design supporting data in the tables. Output summaries must include simulated energy consumption by end use and total energy use and cost by energy type. Example input summaries should represent most common systems and must include occupancy, use pattern, assumed envelope component sizes and descriptive features and assumed mechanical equipment types and descriptive features		MEC
			Final Design		Option 1: Energy rate tariff from project energy providers (only if not using LEED Reference Guide default rates)		MEC
EAPR3		Fundamental Refrigerant Management (PREREQUISITE)	Final Design		Statement indicating which option for compliance applies.		MEC
			Final Design		Option 2: Narrative describing phase out plan, including specific information on phase out dates and refrigerant quantities.		MEC
EA1		Optimize Energy Performance	Final Design		Statement indicating which compliance path option applies.		MEC
			Final Design		Option 1: Statement confirming simulation software capabilities and confirming assumptions and methodology.		MEC
			Final Design		Option 1: General information including simulation program, principal heating source, percent new construction and renovation, weather file, climate zone and Energy Star Target Finder score.		MEC
			Final Design		Option 1: Space summary listing, for each building use, the conditioned area, unconditioned area and total area and include total area for each category		MEC
			Final Design		Option 1: List of all simulation output advisory message data and show difference between baseline and proposed design		MEC
			Final Design		Option 1: Comparison summary for energy model inputs including description of baseline and design case energy model inputs, showing both by element type		MEC
			Final Design		Option 1: Energy type summary lising, for each energy type, utility rate description, units of energy and units of demand		MEC
			Final Design		Option 1: Statement indicating whether project uses on-site renewable energy. If yes, list all sources and indicate, for each source, backup energy type, annual energy generated, rated capacity and renewable energy cost		MEC
			Final Design		Option 1: If analysis includes exceptional calculation methods, statement describing how exceptional calculation measure cost savings is determined		MEC
			Final Design		Option 1: If analysis includes exceptional calculation methods, for each exceptional calculation method indicate energy types and, for each energy type, annual energy savings, annual cost savings, and brief descriptive narrative		MEC
			Final Design		Option 1: Baseline performance rating compliance report table indicating, for each energy end use, whether it is a process load, energy type, annual and peak energy demand for all four orientations. For each orientation indicate total annual energy use for each orientation and total annual process energy use.		MEC
			Final Design		Option 1: Baseline energy cost table indicating, for each energy type, annual cost for all four orientations and building total energy cost.		MEC
			Final Design		Option 1: Proposed Design performance rating compliance report table indicating, for each energy end use, whether it is a process load, energy type, annual and peak energy demand, baseline annual and peak energy demand and percent savings. Indicate total annual energy use and total annual process energy use for both proposed design and baseline and percent savings.		MEC
			Final Design		Option 1: Proposed Design energy cost table indicating, for each energy type, annual cost for all four orientations and building total energy cost.		MEC
			Final Design		Option 1: Energy cost and consumption by energy type report indicating, for each energy type, proposed design and baseline annual use and annual cost, percent savings annual use and annual cost. Indicate for renewable energy annual energy generated and annual cost. Indicate exceptional calculations annual energy savings and annual cost savings. Indicate building total annual energy use, annual energy cost for proposed design and baseline and indicate percent savings annual energy use and annual energy cost.		MEC

LEED Credit Paragraph	Contractor Check Here if Credit is Claimed	LEED-NC v3 Submittals (OCT09)		Provide for Credit Audit Only		Date Submitted (to be filled in by Contractor)	Government Reviewer's Use
PAR		**FEATURE**	**DUE AT**		**REQUIRED DOCUMENTATION**	**DATE**	**REV**
			Final Design		Option 1: Compliance summaries from energy simulation software. If software does not produce compliance summaries provide output summaries and example input summaries for baseline and proposed design supporting data in the tables. Output summaries must include simulated energy consumption by end use and total energy use and cost by energy type. Example input summaries should represent most common systems and must include occupancy, use pattern, assumed envelope component sizes and descriptive features and assumed mechanical equipment types and descriptive features		MEC
			Final Design		Option 1: Energy rate tariff from project energy providers (only if not using LEED Reference Guide default rates)		MEC
EA2.1		On-Site Renewable Energy	Final Design		Statement indicating which compliance path option applies.		ELEC
			Final Design		List all on-site renewable energy sources and indicate, for each source, backup energy type, annual energy generated, rated capacity and renewable energy cost. Indicate total annual energy use (all sources), total annual energy cost (all sources) and percent renewable energy cost.		ELEC MEC
			Final Design		Option 1: Indicate, for renewable energy,proposed design total annual energy generated and annual cost.		ELEC MEC
			Final Design		Option 2: Indicate CBECS building type and building gross area. Provide the following CBECS data: median annual electrical intensity, median annual non-electrical fuel intensity, average electric energy cost, average non-electric fuel cost, annual electric energy use and cost, annual non-electric fuel use and cost.		ELEC MEC
			Final Design		Option 2: Narrative describing renewable systems and explaining calculation method used to estimate annual energy generated, including factors influencing performance.		ELEC MEC
EA2.2		On-Site Renewable Energy	Same as EA2.1		Same as EA2.1		ELEC MEC
EA2.3		On-Site Renewable Energy	Same as EA2.1		Same as EA2.1		ELEC MEC
EA3		Enhanced Commissioning	**Final Design		**Owner's Project Requirements document (OPR)		ALL
			**Final Design		**Basis of Design document for commissioned systems (BOD)		ELEC MEC
			**Final Design		**Commissioning Plan		ELEC MEC
			Closeout		Statement confirming all commissioning requirements have been incorporated into construction documents.		PE
			Closeout		**Commissioning Report		PE
			**Final Design		Statement by CxA confirming Commissioning Design Review		
			Closeout		Statement by CxA confirming review of Contractor submittals for compliance with OPR and BOD		PE
			Closeout		**Systems Manual		PE
			Closeout		Statement by CxA confirming completion of O&M staff and occupant training		PE
			Closeout		**Scope of work for post-occupancy review of building operation, including plan for resolution of outstanding issues		PE
			**Predesign		Statement confirming CxA qualifications and contractual relationships relative to work on this project, demonstrating that CxA is an independent third party.		MEC
EA4		Enhanced Refrigerant Management	Final Design		Refrigerant impact calculation table with all building data and calculation values as shown in LEED 2009 Reference Guide Example Calculations		MEC
			Final Design		Narrative describing any special circumstances or explanatory remarks		
			Closeout	X	Cut sheets highlighting refrigerant data for all HVAC components.		PE
EA5		Measurement & Verification	Closeout		Statement indicating which compliance path option applies.		PE
			Closeout		Measurement and Verification Plan including Corrective Action Plan		PE
			Closeout		**Scope of work for post-occupancy implementation of M&V plan including corrective action plan.		PE
EA6		Green Power	Closeout		Statement indicating which compliance path option applies.		PE
			Closeout		Option 1: Indicate proposed design total annual electric energy usage		PE
			Closeout		Option 2: Indicate actual total annual electric energy usage		PE
			Closeout		Option 3: Calculation indicating building type, total gross area, median electrical intensity and annual electric energy use		PE

LEED Credit Paragraph	Contractor Check Here if Credit is Claimed	LEED-NC v3 Submittals (OCT09)		Provide for Credit Audit Only		Date Submitted (to be filled in by Contractor)	Government Reviewer's Use
PAR		**FEATURE**	**DUE AT**		**REQUIRED DOCUMENTATION**	**DATE**	**REV**
			Closeout		Green power provider summary table indicating, for each purchase type, provider name, annual quantity green power purchased and contract term. Indicate total annual green power use and indicate percent green power		PE
			Closeout		Narrative describing how Green Power or Green Tags are purchased		PE
CATEGORY 4 – MATERIALS AND RESOURCES							
MRPR1		Storage & Collection of Recyclables (PREREQUISITE)	Final Design		Statement confirming that recycling area will accommodate recycling of plastic, metal, paper, cardboard and glass. Narrative indicating any other materials addressed and coordination with pickup.		ARC
MR1.1		Building Reuse: Maintain 55% of Existing Walls, Floors & Roof	**Final Design		If project includes a building addition, confirm that area of building addition does not exceed 2x the area of the existing building.		ARC
			**Final Design		Spreadsheet listing, for each building structural/envelope element, the existing area and reused area. Total percent reused.		ARC
MR1.2		Building Reuse: Maintain 75% of Existing Walls, Floors & Roof	Same as MR1.1		Same as MR1.1		ARC
MR1.3		Building Reuse: Maintain 95% of Existing Walls, Floors & Roof	Same as MR1.1		Same as MR1.1		ARC
MR1.4		Building Reuse: Maintain 50% of Interior Non-Structural Elements	**Final Design		If project includes a building addition, confirm that area of building addition does not exceed 2x the area of the existing building.		ARC
			**Final Design		Spreadsheet listing, for each building interior non-structural element, the existing area and reused area. Total percent reused.		ARC
MR2.1		Construction Waste Management: Divert 50% From Disposal	**Preconstruction		Waste Management Plan		PE
			**Construction Quarterly and Closeout		Spreadsheet calculations indicating material description, disposal/diversion location (or recycling hauler), weight, total waste generated, total waste diverted, diversion percentage		PE
			**Construction Quarterly and Closeout		Receipts/tickets for all items on spreadsheet		PE
MR2.2		Construction Waste Management: Divert 75% From Disposal	Same as MR2.1		Same as MR2.1		PE
MR3.1		Materials Reuse: 5%	Closeout		Statement indicating total materials value and whether default or actual.		PE
			Closeout		Spreadsheet calculations indicating, for each reused/salvaged material, material description, source or vendor, cost. Total reused/salvaged materials percentage.		PE
MR3.2		Materials Reuse: 10%	Same as MR3.1		Same as MR3.1		PE
MR4.1		Recycled Content: 10% (post-consumer + 1/2 pre-consumer)	Closeout		Statement indicating total materials value and whether default or actual.		PE
			Closeout		Spreadsheet calculations indicating, for each recycled content material, material name/description, manufacturer, cost, post-consumer recycled content percent, pre-consumer recycled content percent, source of recycled content data. Total post-consumer content materials cost, total pre-consumer content materials cost, total combined recycled content materials cost, recycled content materials percentage.		PE
			Final Design or NLT Preconstruction		**Purchasing Plan consisting of spreadsheet indicated above, filled in with estimated quantities to show strategy for achieving goal.		PE
			Closeout	X	Manufacturer published product data or certification, confirming recycled content percentages in spreadsheet		PE
MR4.2		Recycled Content: 20% (post-consumer + 1/2 pre-consumer)	Same as MR4.1		Same as MR4.1		PE
MR5.1		Regional Materials:10% Extracted, Processed & Manufactured Regionally	Closeout		Statement indicating total materials value and whether default or actual.		PE
			Closeout		Spreadsheet calculations indicating, for each regional material, material name/description, manufacturer, cost, percent compliant, harvest distance, manufacture distance, source of manufacture and harvest location data. Total regional materials cost, regional materials percentage.		PE
			Preconstruction		**Purchasing Plan consisting of spreadsheet indicated above, filled in with estimated quantities to show strategy for achieving goal.		PE
			Closeout	X	Manufacturer published product data or certification confirming regional material percentages in spreadsheet		PE

LEED Credit Paragraph	Contractor Check Here if Credit is Claimed	LEED-NC v3 Submittals (OCT09)		Provide for Credit Audit Only		Date Submitted (to be filled in by Contractor)	Government Reviewer's Use
PAR		**FEATURE**	**DUE AT**		**REQUIRED DOCUMENTATION**	**DATE**	**REV**
MR5.2		Regional Materials:20% Extracted, Processed & Manufactured Regionally	Same as MR5.1		Same as MR5.1		PE
MR6		Rapidly Renewable Materials	Closeout		Statement indicating total materials value and whether default or actual.		PE
			Closeout		Spreadsheet calculations indicating, for each rapidly renewable material, material name/description, manufacturer, cost, rapidly renewable content percent, rapidly renewable product value. Total rapidly renewable product value, rapidly renewable materials percentage.		PE
			Final Design		**Purchasing Plan consisting of spreadsheet indicated above, filled in with estimated quantities to show strategy for achieving goal.		ARC
			Closeout	X	Manufacturer published product data or certification confirming rapidly renewable material percentages in spreadsheet		PE
MR7		Certified Wood	Closeout		Statement indicating total materials value and whether default or actual.		PE
			Closeout		Spreadsheet calculations indicating, for each certified wood material, material name/description, vendor, cost, wood component percent, certified wood percent of wood component, FSC chain of custody certificate number. Total certified wood product value, certified wood materials percentage.		PE
			Final Design or NLT Preconstruction		**Purchasing Plan consisting of spreadsheet indicated above, filled in with estimated quantities to show strategy for achieving goal.		PE
			Closeout	X	Vendor invoices, FSC chain of custody certificates and anufacturer published product data or certification confirming all certified wood materials percentages in spreadsheet.		PE
INDOOR ENVIRONMENTAL QUALITY							
EQPR1		Minimum IAQ Performance (PREREQUISITE)	Final Design		Statement indicating which option for compliance applies, stating applicable criteria/requirement, and confirming that project has been designed to meet the applicable requirements.		MEC
			Final Design		Narrative describing the project's ventilation design, including specifics about fresh air intake volumes and special considerations.		MEC
EQPR2		Environmental Tobacco Smoke (ETS) Control (PREREQUISITE)	Final Design		Statement indicating which option for compliance applies, stating applicable criteria/requirement, and confirming that project has been designed to meet the applicable requirements.		ARC
			Final Design		List of drawing and specification references that convey conformance to applicable requirements (signage, exhaust system, room separation details, etc).		ARC
EQ1		Outdoor Air Delivery Monitoring	Final Design		Statement indicating which option for compliance applies and confirming that project has been designed to meet the applicable requirements.		MEC
			Final Design		List of drawing and specification references that convey conformance to applicable requirements.		MEC
			Final Design		Narrative describing the project's ventilation design and CO2 monitoring system, including specifics about monitors, operational parameters and setpoints.		MEC
			Closeout	X	Cut sheets for CO2 monitoring system.		PE
EQ2		Increased Ventilation	Final Design		Statement indicating which option for compliance applies and confirming that project has been designed to meet the applicable requirements.		MEC
			Final Design		Narrative describing the project's ventilation design, including specifics about zone fresh air intake volumes and demonstrating compliance.		MEC
			Final Design		Option 2: Narrative describing design method used for determining natural ventilation design, including calculation methodology/model results and demonstrating compliance.		MEC
			Final Design		List of drawing and specification references that convey conformance to applicable requirements.		MEC
EQ3.1		Construction IAQ Management Plan: During Construction	**Preconstruction		Construction IAQ Management Plan		PE
			Closeout		Statement confirming whether air handling units were operated during construction		PE
			Closeout		Dated jobsite photos showing examples of IAQ management plan practices being implemented. Label photos to indicate which practice they demonstrate. Minimum one photo of each practice at each building.		PE

LEED Credit Paragraph	Contractor Check Here if Credit is Claimed	LEED-NC v3 Submittals (OCT09)		Provide for Credit Audit Only		Date Submitted (to be filled in by Contractor)	Government Reviewer's Use
PAR		**FEATURE**	**DUE AT**		**REQUIRED DOCUMENTATION**	**DATE**	**REV**
			Closeout		Spreadsheet indicating, for each filter installed during construction, the manufacturer, model number, MERV rating, location installed, and if it was replaced immediately prior to occupancy.		PE
EQ3.2		Construction IAQ Management Plan: Before Occupancy	**Preconstruction		Construction IAQ Management Plan		PE
			Closeout		Statement indicating which option for compliance applies and confirming that required activities have occurred that meet the applicable requirements.		PE
			Closeout		Option 1a: Narrative describing the project's flushout process, including specifics about temperature, airflow and duration, special considerations (if any) and demonstrating compliance.		PE
			Closeout		Option 1b: Narrative describing the project's pre-occupancy and post-occupancy flushout processes, including specifics about temperature, airflow and duration, special considerations (if any) and demonstrating compliance.		PE
			Closeout		Option 2: Narrative describing the project's IAQ testing process, including specifics about contaminants tested for, locations, remaining work at time of test, retest parameters and special considerations (if any).		PE
			Closeout		Option 2: IAQ testing report demonstrating compliance.		PE
EQ4.1		Low Emitting Materials: Adhesives & Sealants	Closeout		Spreadsheet indicating, for each applicable indoor adhesive, sealant and sealant primer used, the manufacturer, product name/model number, VOC content, LEED VOC limit, and source of VOC data.		PE
			Closeout		Spreadsheet indicating, for each applicable indoor aerosol adhesive, the manufacturer, product name/model number, VOC content, LEED VOC limit, and source of VOC data - OR - Statement confirming no indoor aerosol adhesives were used for the project.		PE
			Closeout	X	Manufacturer published product data or certification confirming material VOCs in spreadsheet		PE
EQ4.2		Low Emitting Materials: Paints & Coatings	Closeout		Spreadsheet indicating, for each applicable indoor paint and coating used, the manufacturer, product name/model number, VOC content, LEED VOC limit, and source of VOC data.		PE
			Closeout		Spreadsheet indicating, for each applicable indoor anti-corrosive/anti-rust paint and coating used, the manufacturer, product name/model number, VOC content, LEED VOC limit, and source of VOC data - OR - Statement confirming no indoor anti-corrosive/anti-rust paints were used for the project .		PE
			Closeout	X	Manufacturer published product data or certification confirming material VOCs in spreadsheet		PE
EQ4.3		Low Emitting Materials: Flooring Systems	Closeout		Spreadsheet indicating, for each indoor flooring system used, the manufacturer, product name/model number, if it meets LEED requirement (yes/no) and source of LEED compliance data.		PE
			Closeout		Spreadsheet indicating, for each indoor carpet cushion used, the manufacturer, product name/model number, if it meets LEED requirement (yes/no) and source of LEED compliance data - OR - Statement confirming no indoor carpet cushion was used for the project.		PE
			Closeout	X	Manufacturer published product data or certification confirming material compliance label in spreadsheet		PE
EQ4.4		Low Emitting Materials: Composite Wood & Agrifiber Products	Closeout		Spreadsheet indicating, for each indoor composite wood and agrifiber product used, the manufacturer, product name/model number, if it contains added urea formaldehyde (yes/no) and source of LEED compliance data.		PE
			Closeout	X	Manufacturer published product data or certification confirming material urea formaldehyde in spreadsheet		PE
EQ5		Indoor Chemical & Pollutant Source Control	Closeout		Spreadsheet indicating, for each permanent entryway system used, the manufacturer, product name/model number and description of system.		PE
			Final Design		List of drawing and specification references that convey locations and installation methods for entryway systems.		ARC
			Final Design		Spreadsheet indicating, for each chemical use area, the room number, room name, description of room separation features (walls, floor/ceilings, openings) and pressure differential from surrounding spaces with doors closed - OR - Statement confirming that project includes no chemical use areas and that no hazardous cleaning materials are needed for building maintenance.		ARC MEC
			Final Design		If project includes chemical use areas: List of drawing and specification references that convey locations of chemical use areas, room separation features and exhaust system.		ARC MEC

LEED Credit Paragraph	Contractor Check Here if Credit is Claimed	LEED-NC v3 Submittals (OCT09)		Provide for Credit Audit Only		Date Submitted (to be filled in by Contractor)	Government Reviewer's Use
PAR		**FEATURE**	**DUE AT**		**REQUIRED DOCUMENTATION**	**DATE**	**REV**
			Final Design		If project includes places where water and chemical concentrate mixing occurs: List of drawing and specification references that convey provisions for containment of hazardous liquid wastes OR - Statement confirming that project includes no places where water and chemical concentrate mixing occurs.		ARC MEC
			Closeout		If project includes chemical use areas: Spreadsheet indicating, for AHUs/mechanical ventilation equipment serving occupied areas, the manufacturer, model number, MERV rating, location installed, and if it was replaced immediately prior to occupancy (yes/no) - OR - Statement confirming that project does not use mechanical equipment for ventilation of occupied areas.		PE
EQ6.1		Controllability of Systems: Lighting	Final Design		Calculation indicating total number of individual workstations, number of workstations with individual lighting controls and the percentage of workstations with individual lighting controls.		ELEC
			Final Design		For each shared multi-occupant space, provide a brief description of lighting controls.		ELEC
			Final Design		Narrative describing lighting control strategy, including type and location of individual controls and type and location of controls in shared multi-occupant spaces.		ELEC
EQ6.2		Controllability of Systems: Thermal Comfort	Final Design		Calculation indicating total number of individual workstations, number of workstations with individual thermal comfort controls and the percentage of workstations with individual thermal comfort controls.		MEC
			Final Design		For each shared multi-occupant space, provide a brief description of thermal comfort controls.		MEC
			Final Design		Narrative describing thermal comfort control strategy, including type and location of individual and shared multi-occupant controls.		MEC
EQ7.1		Thermal Comfort: Design	Final Design		Design criteria spreadsheet indicating, for spring, summer, fall and winter, maximum indoor space design temperature, minimum indoor space design temperature and maximum indoor space design humidity.		MEC
			Final Design		Narrative describing method used to establish thermal comfort control conditions and how systems design addresses the design criteria, including compliance with the referenced standard.		MEC
EQ7.2		Thermal Comfort: Verification	Final Design		Narrative describing the scope of work for the thermal comfort survey, including corrective action plan development		MEC
			Final Design		List of drawing and specification references that convey permanent monitoring system.		MEC
EQ8.1		Daylight & Views: Daylight 75% of Spaces	Final Design		Option 2: Table indicating all regularly occupied spaces with space area and space area with compliant daylight zone. Sum of regularly occupied areas and regularly occupied areas withcompliant daylight zone. Percentage calculation of areas withcompliant daylight zone to total regularly occupied areas.		ARC
			Final Design		Option 1: Simulation model method, software and output data		ELEC
			Final Design		Option 1: Table indicating all regularly occupied spaces with space area, space area with minimum 25 footcandles daylighting illumination, and method of providing glare control. Sum of regularly occupied areas and regularly occupied areas with 25 fc daylighting. Percentage calculation of areas with 25 fc daylighting to total regularly occupied areas.		ELEC
			Final Design		For all occupied spaces excluded from the calculation, provide narrative indicating reasons for excluding the space.		ARC
			Final Design		List of drawing and specification references that convey exterior glazed opening head and sill heights, glazing performance properties and glare control/sunlight redirection devices.		ARC
			Closeout	X	Manufacturer published product data or certification confirming glazing Tvis in spreadsheet		PE
EQ8.2		Daylight & Views: Views for 90% of Spaces	Final Design		Table indicating all regularly occupied spaces with space area and space area with access to views. Sum of regularly occupied areas and regularly occupied areas with access to views. Percentage calculation of areas with views to total regularly occupied areas.		ARC
			Final Design		For all occupied spaces excluded from the calculation, provide narrative indicating reasons for excluding the space.		ARC
			Final Design		LEED Floor plan drawings showing line of sight diagramming of views areas in each regularly occupied space. List of drawing/specification references that convey exterior glazed opening head and sill heights.		ARC
INNOVATION & DESIGN PROCESS							

LEED Credit Paragraph	Contractor Check Here if Credit is Claimed	**LEED-NC v3 Submittals (OCT09)**		Provide for Credit Audit Only		Date Submitted (to be filled in by Contractor)	Government Reviewer's Use
PAR		**FEATURE**	**DUE AT**		**REQUIRED DOCUMENTATION**	**DATE**	**REV**
IDc1.1		Innovation in Design	Final Design		Narrative decribing intent, requirement for credit, project approach to the credit. List of drawings and specification references that convey implementation of credit. All other documentation that validates claimed credit.		
IDc1.2		Innovation in Design	Final Design				
IDc1.3		Innovation in Design	Final Design				
IDc1.4		Innovation in Design	Final Design				
IDc2		LEED Accredited Professional	Final Design		Narrative indicating name of LEED AP, company name of LEED AP, description of LEED AP's role and responsiblilities in the project.		ARC

ATTACHMENT F
Version 02-03-2010

BUILDING INFORMATION MODELING REQUIREMENTS

1.0 Section 1 - Submittal Format

1.1. Design Deliverables. Develop all designs using Building Information Modeling (BIM) and Computer Aided Design (CAD) software. Design submittal drawings shall be 22x34 size, suitable for half-size scaled reproduction.

2.0 Section 2 – Design Requirements

2.1. BIM Model and Facility Data. Contractor shall use BIM application(s) and software(s) to develop project designs. "Facility Data" is defined as associated intelligent attribute data. The "Model" is defined as 3D graphics that includes Facility Data and output as described in the paragraph 'Output' below. Contractors will use the Model to produce accurate Construction Documents. All submitted BIM Models and associated Facility Data shall be fully compatible with Autodesk Revit 9.0 or higher

2.1.1. Reference. Refer to ERDC TR-06-10, "U.S. Army Corps of Engineers Building Information Modeling Road Map" from the CAD/BIM Technology Center website for more information on the USACE BIM implementation goals.

2.2. Drawings. Deliver CAD files used for the creation of the Construction Documents Drawings per requirements in Section 01 33 16, the criteria of the USACE [Not Supplied - DistrictInfoGeneral : ISSUING_DISTRICT] District, and as noted herein. Specification of a CAD file format for these Drawings does not limit which BIM application(s) or software(s) may be used for project development and execution.

2.2.1. IFC Support. The Contractor's selected BIM application(s) and software(s) must support the IFC (Industry Foundation Class - see www.iai-tech.org). Submit any deviations from or additions to the IFC property sets for any new spaces, systems, and equipment for Government approval.

2.2.2. Submittal Requirements. BIM submittals shall conform to the requirements of Sections 3 and 4 below.

2.2.3. BIM Project Execution Plan.

2.2.3.1. Develop a BIM Project Execution Plan ("Plan" or "PxP") documenting the BIM and analysis technologies selected for the Project Model (integrated with the AEC CAD Standard) from concept development through As-Builts as a design, production, coordination, construction, and documentation tool and the collaborative process by which it shall be executed. See Section 7 for additional guidance on developing the Plan.

2.2.4. BIM Requirements.

2.2.4.1. Facility Data. Develop the Facility Data consisting of a set of intelligent elements for the Model (e.g., doors, air handlers, electrical panels). This Facility Data shall include all material definitions and attributes that are necessary for the Project facility design and construction. Additional data in support of Section 6 Contractor Electives is encouraged.

2.2.4.2. Model Content. The Model and Facility Data shall include, at a minimum, the requirements of Section 4 below.

2.2.4.3. Model Granularity. Models may vary in level of detail for individual elements within a model, but at a minimum must include all features that would be included on a quarter inch (1/4" = 1'0") scaled drawing (e.g. at least 1/16th, 1/8th and 1/4th), or appropriately scaled civil drawings.

2.2.4.4. Output. Submitted CAD drawings (e.g., plans, elevations, sections, schedules, details, etc.) shall be derived (commonly known as extractions, views or sheets) and maintained from the submitted Model and Facility Data.

2.3. Quality Control. Implement quality control (QC) parameters for the Model, including:

2.3.1. Model Standards Checks. QC validation used to ensure that the Project Facility Data set has no undefined, incorrectly defined or duplicated elements. Report non-compliant elements and corrective action plan to correct non-compliant elements. Provide the government with detailed justification and request government approval for any non-compliant element which the contractor proposes to be allowed to remain in the Model.

2.3.2. CAD Standards Checks. QC checking performed to ensure that the fonts, dimensions, line styles, levels and other construction document formatting issues are followed per the A/E/C CADD Standard.

2.3.3. Other Parameters. Develop such other QC parameters as Contractor deems appropriate for the Project and provide to the Government for concurrence.

2.4. Design and Construction Reviews. Perform design and construction reviews at each submittal stage under Section 3 to test the Model, including:

2.4.1. Visual Checks. Check to ensure the design intent has been followed and that there are no unintended elements in the Model.

2.4.2. Interference Management Checks. Locate conflicting spatial data in the Model where two elements are occupying the same space. Log hard interferences (e.g., mechanical vs. structural or mechanical vs. mechanical overlaps in the same location) and soft interferences, (e.g., conflicts regarding equipment clearance, service access, fireproofing, insulation) in a written report and resolve.

2.4.3. IFC Coordination View. Provide an IFC Coordination View in IFC Express format for all deliverables. Provide exported property set data for all IFC supported named building elements.

2.4.4. Other Parameters. Develop such other Review parameters as the Contractor deems appropriate for the Project and provide to the Government for concurrence.

3.0 Section 3 – Design Stage Submittal Requirements

3.1. General Submittal Requirements.

3.1.1. Provide submittals in compliance with BIM Project Execution Plan deliverables at stages as described hereinafter.

3.1.2. At each Stage in Paragraphs 3.3 through 3.6, provide a Contractor-certified written report confirming that consistency checks as identified in Paragraphs 2.3 and 2.4 have been completed. This report shall be discussed as part of the review process and shall address cross-discipline interferences, if any.

3.1.3. At each Stage in Paragraphs 3.3 through 3.6, provide the Government with:

- The Model, Facility Data, and CAD Data files.

- A 3-D interactive review format of the Model in Bentley Navigator, Autodesk Navisworks, Adobe 3D PDF 7.0 (or later), Google Earth KMZ or other format per Plan requirements. The file format for reviews can change between submittals.

- A list of all submitted files. The list should include a description, directory, and file name for each file submitted. For all CAD sheets, include the sheet title and sheet number. Identify files that have been produced from the submitted Model and Facility Data.

3.1.4. The Government shall confirm acceptability of all submittals identified in Section 3 in coordination with the USACE [Not Supplied - DistrictInfoGeneral : ISSUING_DISTRICT] BIM Manager

3.2. Initial Design Conference Submittal.

3.2.1. Submit a digital copy of the Plan where, in addition to Paragraph 3.1.4, the USACE [Not Supplied - DistrictInfoGeneral : ISSUING_DISTRICT] District BIM Manager will confirm acceptability of the Plan or advise as to additional processes or activities necessary to be incorporated.

3.2.2. Within thirty (30) days after the approval of the Plan, conduct a demonstration to review the Plan for clarification, and to verify the functionality of Model technology workflow and processes. If modifications are required, the Contractor shall complete the modifications and resubmit the Plan and perform subsequent demonstration for Government acceptance. There will be no payment for design or construction until the Plan is acceptable to the Government. The Government may also withhold payment for design and construction for unacceptable performance in executing the approved Plan.

3.3. Interim Design Submittals.

3.3.1. BIM and CAD Data. The Model shall include the requirements identified in Paragraph 2.2.4 as applicable to the Interim Design package(s).

3.4. Final Design Submissions and Design Complete Submittals.

3.4.1. BIM and CAD Data. The Model shall include the requirements identified in Paragraph 2.2.4. Acceptance according to Paragraph 3.1.4 is required before commencement of construction, as described in Paragraph 3.7.6 of Section 01 33 16.

3.5. Submittals – Over-The-Shoulder Progress Reviews. Periodic quality control meetings or construction progress review meetings shall include quality control reviews on the implementation and use of the Model, including interference management and design change tracking information.

3.6. Final As-Builts BIM and CAD Data Submittal. Submit the final Model, Facility Data, and CAD files reflecting as-built conditions for Government Approval, as specified in Section 01 78 02.00 10, PROJECT CLOSEOUT.

4.0 Section 4 – BIM Model Minimum Requirements and Output

4.1. General Provisions. The deliverable Model shall be developed to include the systems described below as they would be built and the processes of installing them, and to reflect final as-built conditions. The deliverable model at the interim design stage and at the final design stage ("released for construction") shall be developed to include as many of the systems described below as are necessary and appropriate at that design stage.

4.2. Architectural/Interior Design. The Architectural systems Model may vary in level of detail for individual elements, but at a minimum must include all features that would be included on a quarter inch (1/4"=1'0") scaled drawing. Additional minimum Model requirements include:

4.2.1. Spaces. The Model shall include spaces defining accurate net square footage and net volume, and holding data for the room finish schedule for including room names and numbers. Include Programmatic Information provided by the Government or validated program to verify design space against programmed space, using this information to validate area quantities.

4.2.2. Walls and Curtain Walls. Each wall shall be depicted to the exact height, length, width and ratings (thermal, acoustic, fire) to properly reflect wall types. The Model shall include all walls, both interior and exterior, and the necessary intelligence to produce accurate plans, sections and elevations depicting these design elements.

4.2.3. Doors, Windows and Louvers. Doors, windows and louvers shall be depicted to represent their actual size, type and location. Doors and windows shall be modeled with the necessary intelligence to produce accurate window and door schedules.

4.2.4. Roof. The Model shall include the roof configuration, drainage system, penetrations, specialties, and the necessary intelligence to produce accurate plans, building sections and generic wall sections where roof design elements are depicted.

4.2.5. Floors. The floor slab shall be developed in the structural Model and then referenced by the architectural Model for each floor of the Project building.

4.2.6. Ceilings. All heights and other dimensions of ceilings, including soffits, ceiling materials, or other special conditions shall be depicted in the Model with the necessary intelligence to produce accurate plans, building sections and generic wall sections where ceiling design elements are depicted.

4.2.7. Vertical Circulation. All continuous vertical components (i.e., non-structural shafts, architectural stairs, handrails and guardrails) shall be accurately depicted and shall include the necessary intelligence to produce accurate plans, elevations and sections in which such design elements are referenced.

4.2.8. Architectural Specialties and Woodwork. All architectural specialties (i.e., toilet room accessories, toilet partitions, grab bars, lockers, and display cases) and woodwork (i.e., cabinetry and counters) shall be accurately depicted with the necessary intelligence to produce accurate plans, elevations and sections in which such design elements are referenced.

4.2.9. Signage. The Model shall include all signage and the necessary intelligence to produce accurate plans and schedules.

4.2.10. Schedules. Provide door, window, hardware sets using BHMA designations, flooring, wall finish, and signage schedules from the Model, indicating the type, materials and finishes used in the design.

4.3. Furniture. The furniture systems Model may vary in level of detail for individual elements within a Model, but at a minimum must include all features that would be included on a quarter inch (1/4”=1’0”) scaled drawing, and have necessary intelligence to produce accurate plans. Representation of furniture elements is to be 2D. Contractor may provide a minimal number of 3D representations as examples. Examples of furniture include, but are not limited to, desks, furniture systems, seating, tables, and office storage.

4.3.1. Furniture Coordination. Furniture that makes use of electrical, data or other features shall include the necessary intelligence to produce coordinated documents and data.

4.4. Equipment. The Model may vary in level of detail for individual elements within a Model. Equipment shall be depicted to meet layout requirements with the necessary intelligence to produce

accurate plans and minimum schedules depicting their configuration. Examples of equipment include but are not limited to copiers, printers, refrigerators, ice machines and microwaves.

4.4.1. Schedules. Provide furniture and equipment schedules from the model indicating the materials, finishes, mechanical, and electrical requirements.

4.5. Structural. The structural systems Model may vary in level of detail for individual elements, but at a minimum must include all features that would be included on a quarter inch (1/4”=1’0”) scaled drawing. Additional minimum Model requirements include:

4.5.1. Foundations. All necessary foundation and/or footing elements, with necessary intelligence to produce accurate plans and elevations.

4.5.2. Floor Slabs. Structural floor slabs shall be depicted, including all necessary recesses, curbs, pads, closure pours, and major penetrations accurately depicted.

4.5.3. Structural Steel. All steel columns, primary and secondary framing members, and steel bracing for the roof and floor systems (including decks), including all necessary intelligence to produce accurate structural steel framing plans and related building/wall sections.

4.5.4. Cast-in-Place Concrete. All walls, columns, and beams, including necessary intelligence to produce accurate plans and building/wall sections depicting cast-in-place concrete elements.

4.5.5. Expansion/Contraction Joints. Joints shall be accurately depicted.

4.5.6. Stairs. The structural Model shall include all necessary openings and framing members for stair systems, including necessary intelligence to produce accurate plans and building/wall sections depicting stair design elements.

4.5.7. Shafts and Pits. The structural Model shall include all necessary shafts, pits, and openings, including necessary intelligence to produce accurate plans and building/wall sections depicting these design elements.

4.6. Mechanical. The mechanical systems Model may vary in level of detail for individual elements, but at a minimum must include all features that would be included on a quarter inch (1/4”=1’0”) scaled drawing. Small diameter (less than 1-1/2” NPS) field-routed piping is not required in the model. Additional minimum Model requirements include:

4.6.1. HVAC. All necessary heating, ventilating, air-conditioning and specialty equipment, including air distribution ducts for supply, return, and ventilation and exhaust ducts, including control system, registers, diffusers, grills and hydronic baseboards with necessary intelligence to produce accurate plans, elevations, building/wall sections and schedules.

4.6.1.1. Mechanical Piping. All necessary piping and fixture layouts, and related equipment, including necessary intelligence to produce accurate plans, elevations, building/wall sections, and schedules.

4.6.2. Plumbing. All necessary plumbing piping and fixture layouts, floor and area drains, and related equipment, including necessary intelligence to produce accurate plans, elevations, building/wall sections, riser diagrams, and schedules.

4.6.3. Equipment Clearances. All HVAC and Plumbing equipment clearances shall be modeled for use in interference management and maintenance access requirements.

4.6.4. Elevator Equipment. The Model shall include the necessary equipment and control system, including necessary intelligence to produce accurate plans, sections and elevations depicting these design elements.

4.7. Electrical/Telecommunications. The electrical systems Model may vary in level of detail for individual elements, but at a minimum must include all features that would be included on a quarter inch (1/4”=1’0”) scaled drawing. Small diameter (less than 1-1/2”Ø) field-routed conduit is not required in the model. Additional minimum Model requirements include:

4.7.1. Interior Electrical Power and Lighting. All necessary interior electrical components (i.e., lighting, receptacles, special and general purpose power receptacles, lighting fixtures, panelboards, cable trays and control systems), including necessary intelligence to produce accurate plans, details and schedules. Lighting and power built into furniture/equipment shall be modeled.

4.7.2. Special Electrical Systems. All necessary special electrical components (i.e., security, Mass Notification, Public Address, nurse call and other special occupancies, and control systems), including necessary intelligence to produce accurate plans, details and schedules.

4.7.3. Grounding Systems. All necessary grounding components (i.e., lightning protection systems, static grounding systems, communications grounding systems, bonding), including necessary intelligence to produce accurate plans, details and schedules.

4.7.4. Communications. All existing and new communications service controls and connections, both above ground and underground with necessary intelligence to produce accurate plans, details and schedules. Cable tray routing shall be modeled without detail of cable contents.

4.7.5. Exterior Building Lighting. All necessary exterior lighting with necessary intelligence to produce accurate plans, elevations and schedules. The exterior building lighting Model shall include all necessary lighting, relevant existing and proposed support utility lines and equipment required with necessary intelligence to produce accurate plans, details and schedules.

4.7.6. Equipment Clearances. The model shall incorporate and define all electrical and communications working spaces, clearances, and required access

4.8. Fire Protection. The fire protection system Model may vary in level of detail for individual elements, but at a minimum must include all features that would be included on a quarter inch (1/4”=1’0”) scaled drawing. Additional minimum Model requirements include:

4.8.1. Fire Protection System. All relevant fire protection components (i.e., branch piping, sprinkler heads, fittings, drains, pumps, tanks, sensors, control panels) with necessary intelligence to produce accurate plans, elevations, building/wall sections, riser diagrams, and schedules. All fire protection piping shall be modeled.

4.8.2. Fire Alarms. Fire alarm/mass notification devices and detection system shall be indicated with necessary intelligence to produce accurate plans depicting them.

4.9. Civil. The civil Model may vary in level of detail for individual elements, but at a minimum must include all features that would be included on a one inch (1”=100’) scaled drawing. Additional minimum Model requirements include:

4.9.1. Terrain (DTM). All relevant site conditions and proposed grading, including necessary intelligence to produce accurate Project site topographical plans and cross sections.

4.9.2. Drainage. All existing and new drainage piping, including upgrades thereto, including necessary intelligence to produce accurate plans and profiles for the Project site.

4.9.3. Storm Water and Sanitary Sewers. All existing and new sewer structures and piping, including upgrades thereto, on the Project site with necessary connections to mains or other distribution points as appropriate, including necessary intelligence to produce accurate plans and profiles for the Project site.

4.9.4. Utilities. All necessary new utilities connections from the Project building(s) to the existing or newly-created utilities, and all existing above ground and underground utility conduits, including necessary intelligence to produce accurate plans and site-sections.

4.9.5. Roads and Parking. All necessary roadways and parking lots or parking structures, including necessary intelligence to produce accurate plans, profiles and cross-sections.

5.0 Section 5 - Ownership and Rights in Data

5.1. Ownership. The Government has ownership of and rights at the date of Closeout Submittal to all CAD files, BIM Model, and Facility Data developed for the Project in accordance with FAR Part 27, clauses incorporated in Section 00 72 00, Contract Clauses and Special Contract Requirement 1.14 GOVERNMENT RE-USE OF DESIGN (Section 00 73 00). The Government may make use of this data following any deliverable.

6.0 Section 6 – Contractor Electives

6.1. Applicable Criteria. If the Contractor elected to include one or more of the following features as an elective in its accepted contract proposal for additional credit during the source selection, as described in the proposal submission requirements and evaluation criteria, the following criteria are requirements, as applicable to those elective feature(s).

6.2. COBIE Compliance. The Model and Facility Data for the Project shall fulfill Construction Operations Building Information Exchange (COBIE) requirements as defined by the Whole Building Design Guide organization, including all requirements for the indexing and submission of Portable Document Format (PDF) and other appropriate file formats that would otherwise be printed and submitted in compliance with Project operations and maintenance handover requirements.

6.3. Project Scheduling using the Model. In the BIM Execution Plan and during the Preliminary BIM Execution Plan Review, provide an overview of the use of BIM in the development and support of the project construction schedule.

6.3.1. Submittal Requirements. During the Submittal stages, the Contractor shall deliver the construction schedule with information derived from the Model.

6.3.1.1. Construction Submittals – Over-The-Shoulder Progress Reviews. Periodic quality control meetings or construction progress review meetings shall include quality control reviews on the implementation and use of the Model for project scheduling.

6.4. Cost Estimating. In the BIM Execution Plan and during the Preliminary BIM Execution Plan Review, provide an overview of the use of BIM in the development and support of cost estimating requirements, or other applications such as cost analysis and estimate validation.

6.4.1. Submittal Requirements. During the Submittal stages, the Contractor shall deliver cost estimating information derived from the Model.

6.4.2. Project completion. At project completion, the Contractor shall provide an MII (Micro Computer Aided Cost Estimating System Generation II) Cost Estimate which follows the USACE Cost Engineering Military Work Breakdown System (WBS), a modified Uniformat, to at least the sub-systems level and uses quantity information supplied directly from BIM output to the maximum extent possible,

though other "Gap" quantity information will be included as necessary for a complete and accurate cost estimate.

6.4.2.1. Sub system level extracted quantities from the BIM for use within the estimate shall be provided according to how detailed line items or tasks should be installed/built so that accurate costs can be developed and/or reflected. Therefore, when developing a BIM, the designer shall be cognizant of what tasks need to be separated appropriately at the beginning stages of model development, such as tasks done on the first floor versus the same task on higher floors that will be more labor intensive and therefore need to have a separate quantity and be priced differently. Tasks and their extracted quantities from the BIM shall be broken done by their location (proximity in the structure) as well as the complexity of its installation.

6.4.2.2. At all design stages it shall be understood that BIM output as described in this document will not generate all quantities that are necessary in order to develop a complete and accurate cost estimate of the project based on the design. An example of this would be plumbing that is less than 1.5" diameter and therefore not expected to be modeled due to granularity; this information is commonly referred to as The Gap. Quantities from The Gap and their associated costs shall be included in the final project actual cost estimates as well.

6.5. Other Analyses and Reports. Structural, energy and efficiency, EPACT 2005 & EISA 2007, lighting design, daylighting, electrical power, psychrometric processing, shading, programming, LEED, fire protection, code compliance, Life Cycle Cost, acoustic, plumbing.

7.0 Section 7 – BIM Project Execution Plan Template

7.1. Contractors will utilize the latest version of the USACE BIM PROJECT EXECUTION PLAN (USACE PxP) Template to develop an acceptable Plan. The template can be downloaded from the CAD/BIM Technology Center website.

ATTACHMENT G
DESIGN SUBMITTAL DIRECTORY AND SUBDIRECTORY FILE ARRANGEMENT

Organize electronic design submittal files in a subdirectory/file structure in accordance with the following table.

The Contractor may suggest a slightly different structure, subject to the discretion of the government.

Design Submittal Directory and Subdirectory File Arrangement.

Directory	Sub-Directory	Sub-Directory or Files	Files
Submittal/Package Name	Narratives	PDF file or files with updated design narrative for each applicable design discipline	
	Drawings	PDF (subdirectory)	Single PDF file with all applicable drawing sheets - bookmarked by sheet number and name
		BIM (subdirectory) See Attachment F.	BIM project folder (with files) per the USACE Workspace. Include an Excel drawing index file with each drawing sheet listed by sheet #, name and corresponding dgn file name (Final Design & Design Complete only)
	Design Analysis & Calculations	Individual PDF files containing design analysis and calculations for each discipline applicable to the submittal	
		PDF file with Fire Protection and Life Safety Code Review checklist	
	LEED	PDF file with updated Leed Check List	
		PDF file or files with LEED Templates for each point with applicable documentation included in each file.	
		LEED SUBMITTALS	
	Energy Analysis	PDF with baseline energy consumption analysis	
		PDF with actual building energy consumption analysis	
	Specifications	Single PDF file with table of contents and all applicable specifications sections.	
		Submittal Register (Final Design & Design Complete submittal only)	
	Design Quality Control	PDF file or files with DQC checklist(s) and/or statements	
	Building Rendering(s)	PDF file of rendering for each building type included in contract (Final Design & Design Complete).	

ATTACHMENT H
USACE BIM Project Execution Plan (PxP) Template Version 1.0

This template is a tool that is provided to assist in the development of a USACE BIM Project Execution Plan as required per contract. The template provides a standard format for organizations to establish their general means and methods for meeting the scope and deliverable requirements in Attachment F. It was adapted from the buildingSMART alliance™ (bSa) Project "BIM Project Execution Planning" as developed by The Computer Integrated Construction (CIC) Research Group of The Pennsylvania State University. The bSa project is sponsored by The Charles Pankow Foundation, Construction Industry Institute (CII), Penn State Office of Physical Plant (OPP), and The Partnership for Achieving Construction Excellence (PACE). The template can be found at the following link:

https://mrsi.usace.army.mil/rfp/Shared%20Documents/USACE_BIM_PXP_TEMPLATE_V1.0.pdf

Please note: Instructions and examples to assist with the completion of this template are currently in grey. The text can and should be modified to suit the needs of the organization filling out the template. If modified, the format of the text should be changed to match the rest of the document. This can be completed, in most cases, by selecting the normal style in the template styles.

SECTION 01 45 01.10
QUALITY CONTROL SYSTEM (QCS)

1.0 GENERAL

1.1. CORRESPONDENCE AND ELECTRONIC COMMUNICATIONS

1.2. QCS SOFTWARE

1.3. SYSTEM REQUIREMENTS

1.4. RELATED INFORMATION

1.5. CONTRACT DATABASE

1.6. DATABASE MAINTENANCE

1.7. IMPLEMENTATION

1.8. DATA SUBMISSION VIA COMPUTER DISKETTE OR CD-ROM

1.9. MONTHLY COORDINATION MEETING

1.10. NOTIFICATION OF NONCOMPLIANCE

1.0 GENERAL

The Government will use the Resident Management System for Windows (RMS) to assist in its monitoring and administration of this contract. The Contractor shall use the Government-furnished Construction Contractor Module of RMS, referred to as QCS, to record, maintain, and submit various information throughout the contract period. The Contractor module, user manuals, updates, and training information can be downloaded from the RMS web site. This joint Government-Contractor use of RMS and QCS will facilitate electronic exchange of information and overall management of the contract. QCS provides the means for the Contractor to input, track, and electronically share information with the Government in the following areas:

- Administration
- Finances
- Quality Control
- Submittal Monitoring
- Scheduling
- Import/Export of Data
- Request for Information
- Accident Reporting
- Safety Exposure Manhours

1.1. CORRESPONDENCE AND ELECTRONIC COMMUNICATIONS

For ease and speed of communications, both Government and Contractor will exchange correspondence and other documents in electronic format. Correspondence, pay requests and other documents comprising the official contract record shall also be provided in paper format, with signatures and dates where necessary. Paper documents will govern, in the event of discrepancy with the electronic version.

1.2. OTHER FACTORS

Particular attention is directed to Contract Clause, "Schedules for Construction Contracts", Contract Clause, "Payments", Section 01 32 01.00 10, PROJECT SCHEDULE, Section 01 33 00, SUBMITTAL PROCEDURES, and Section 01 45 04.00 10, CONTRACTOR QUALITY CONTROL, which have a direct relationship to the reporting to be accomplished through QCS. Also, there is no separate payment for establishing and maintaining the QCS database; all costs associated therewith shall be included in the contract pricing for the work.

1.3. QCS SOFTWARE

QCS is a Windows-based program that can be run on a stand-alone personal computer or on a network. The Government will make available the QCS software to the Contractor after award of the construction contract. Prior to the Pre-Construction Conference, the Contractor shall be responsible to download, install and use the latest version of the QCS software from the Government's RMS Internet Website. Upon specific justification and request by the Contractor, the Government can provide QCS on CD-ROM. Any program updates of QCS will be made available to the Contractor via the Government RMS Website as they become available.

1.4. SYSTEM REQUIREMENTS

The following listed hardware and software is the minimum system configuration that the Contractor shall have to run QCS:

(a) Hardware

- IBM-compatible PC with 1000 MHz Pentium or higher processor
- 256 MB RAM for workstation / 512+ MB RAM for server

- 1 GB hard drive disk space for sole use by the QCS system
- Compact disk (CD) Reader, 8x speed or higher
- SVGA or higher resolution monitor (1024 x 768, 256 colors)
- Mouse or other pointing devise
- Windows compatible printer (Laser printer must have 4+ MB of RAM)
- Connection to the Internet, minimum 56K BPS

(b) Software

- MS Windows 2000 or higher
- MS Word 2000 or newer
- Latest version of : Netscape Navigator, Microsoft Internet Explorer, or other browser that supports HTML 4.0 or higher
- Electronic mail (E-mail), MAPI compatible
- Virus protection software that is regularly upgraded with all issued manufacturer's updates

1.5. RELATED INFORMATION

1.5.1. QCS USER GUIDE

After contract award, the Contractor shall download instructions for the installation and use of QCS from the Government RMS Internet Website. In case of justifiable difficulties, the Government will provide the Contractor with a CD-ROM containing these instructions.

1.5.2. CONTRACTOR QUALITY CONTROL (CQC) TRAINING

The use of QCS will be discussed with the Contractor's QC System Manager during the mandatory CQC Training class.

1.6. CONTRACT DATABASE

Prior to the pre-construction conference, the Government will provide the Contractor with basic contract award data to use for QCS. The Government will provide data updates to the Contractor as needed, generally by using the government's SFTP repository built into QCS import/export function. These updates will generally consist of submittal reviews, correspondence status, QA comments, and other administrative and QA data.

1.7. DATABASE MAINTENANCE

The Contractor shall establish, maintain, and update data for the contract in the QCS database throughout the duration of the contract. The Contractor shall establish and maintain the QCS database at the Contractor's site office. Data updates to the Government, e.g., daily reports, submittals, RFI's, schedule updates, payment requests, etc. shall be submitted using the government's SFTP repository built into QCS export function. If permitted by the Contracting Officer, email or CD-ROM may be used instead (see Paragraph DATA SUBMISSION VIA CD-ROM). The QCS database typically shall include current data on the following items:

1.7.1. ADMINISTRATION

1.7.1.1. Contractor Information

The database shall contain the Contractor's name, address, telephone numbers, management staff, and other required items. Within 14 calendar days of receipt of QCS software from the Government, the Contractor shall deliver Contractor administrative data in electronic format.

1.7.1.2. Subcontractor Information

The database shall contain the name, trade, address, phone numbers, and other required information for all subcontractors. A subcontractor must be listed separately for each trade to be performed. Each subcontractor/trade shall be assigned a unique Responsibility Code, provided in QCS. Within 14 calendar days of receipt of QCS software from the Government, the Contractor shall deliver subcontractor administrative data in electronic format.

1.7.1.3. Correspondence

All Contractor correspondence to the Government shall be identified with a serial number. Correspondence initiated by the Contractor's site office shall be prefixed with "S". Letters initiated by the Contractor's home (main) office shall be prefixed with "H". Letters shall be numbered starting from 0001. (e.g., H-0001 or S-0001). The Government's letters to the Contractor will be prefixed with "C".

All Requests For Information (RFI) shall be exchanged using the Built-in RFI generator and tracker in QCS.

1.7.1.4. Equipment

The Contractor's QCS database shall contain a current list of equipment planned for use or being used on the jobsite, including the most recent and planned equipment inspection dates.

1.7.1.5. Management Reporting

QCS includes a number of reports that Contractor management can use to track the status of the project. The value of these reports is reflective of the quality of the data input, and is maintained in the various sections of QCS. Among these reports are: Progress Payment Request worksheet, QA/QC comments, Submittal Register Status, Three-Phase Inspection checklists.

1.7.2. FINANCES

1.7.2.1. Pay Activity Data

The QCS database shall include a list of pay activities that the Contractor shall develop in conjunction with the design and construction schedule. The sum of all pay activities shall be equal to the total contract amount, including modifications. Pay activities shall be grouped by Contract Line Item Number (CLIN), and the sum of the activities shall equal the amount of each CLIN. The total of all CLINs equals the Contract Amount.

1.7.2.2. Payment Requests

All progress payment requests shall be prepared using QCS. The Contractor shall complete the payment request worksheet prompt payment certification, and payment invoice in QCS. The work completed under the contract, measured as percent or as specific quantities, shall be updated at least monthly. After the update, the Contractor shall generate a payment request report using QCS. The Contractor shall submit the payment request, prompt payment certification, and payment invoice with supporting data by using the government's SFTP repository built into QCS export function. If permitted by the Contracting Officer, E-mail or a CD-ROM may be used. A signed paper copy of the approved payment request is also required, which shall govern in the event of discrepancy with the electronic version.

1.7.3. Quality Control (QC)

QCS provides a means to track implementation of the 3-phase QC Control System, prepare daily reports, identify and track deficiencies, document progress of work, and support other contractor QC requirements. The Contractor shall maintain this data on a daily basis. Entered data will automatically output to the QCS generated daily report. The Contractor shall provide the Government a Contractor

Quality Control (CQC) Plan within the time required in Section 01 45 04.00 10, CONTRACTOR QUALITY CONTROL. Within seven calendar days of Government acceptance, the Contractor shall submit a QCS update reflecting the information contained in the accepted CQC Plan: schedule, pay activities, features of work, submittal register, QC requirements, and equipment list.

1.7.3.1. Daily Contractor Quality Control (CQC) Reports

QCS includes the means to produce the Daily CQC Report. The Contractor may use other formats to record basic QC data. However, the Daily CQC Report generated by QCS shall be the Contractor's official report. Data from any supplemental reports by the Contractor shall be summarized and consolidated onto the QCS-generated Daily CQC Report. Daily CQC Reports shall be submitted as required by Section 01 45 04.00 10, CONTRACTOR QUALITY CONTROL. Reports shall be submitted electronically to the Government within 24 hours after the date covered by the report. The Contractor shall also provide the Government a signed, printed copy of the daily CQC report.

1.7.3.2. Deficiency Tracking

The Contractor shall use QCS to track deficiencies. Deficiencies identified by the Contractor will be numerically tracked using QC punch list items. The Contractor shall maintain a current log of its QC punch list items in the QCS database. The Government will log the deficiencies it has identified using its QA punch list items. The Government's QA punch list items will be included in its export file to the Contractor. The Contractor shall regularly update the correction status of both QC and QA punch list items.

1.7.3.3. QC Requirements

The Contractor shall develop and maintain a complete list of QC testing and required structural and life safety special inspections required by the International Code Council (ICC), transferred and installed property, and user training requirements in QCS. The Contractor shall update all data on these QC requirements as work progresses, and shall promptly provide this information to the Government via QCS.

1.7.3.4. Three-Phase Control Meetings

The Contractor shall maintain scheduled and actual dates and times of preparatory and initial control meetings in QCS.

1.7.3.5. Labor and Equipment Hours

The Contractor shall log labor and equipment exposure hours on a daily basis. This data will be rolled up into a monthly exposure report.

1.7.3.6. Accident/Safety Tracking Reporting

The Government will issue safety comments, directions, or guidance whenever safety deficiencies are observed. The Government's safety comments will be included in its export file to the Contractor. The Contractor shall regularly update the correction status of the safety comments. In addition, the Contractor shall utilize QCS to advise the Government of any accidents occurring on the jobsite. This supplemental entry is not to be considered as a substitute for completion of mandatory notification and reports, e.g., ENG Form 3394 and OSHA Form 300.

1.7.3.7. Features of Work

The Contractor shall include a complete list of the features of work in the QCS database. A feature of work may be associated with multiple pay activities. However, each pay activity (see subparagraph "Pay Activity Data" of paragraph "Finances") will only be linked to a single feature of work.

1.7.3.8. Hazard Analysis

The Contractor shall use QCS to develop a hazard analysis for each feature of work included in its CQC Plan. The hazard analysis shall address any hazards, or potential hazards, that may be associated with the work

1.7.4. Submittal Management

The Government will provide the submittal register form, ENG Form 4288, SUBMITTAL REGISTER, in electronic format. The Contractor and Designer of Record (DOR) shall develop and maintain a complete list of all submittals, including completion of all data columns and shall manage all submittals. Dates on which submittals are received and returned by the Government will be included in its export file to the Contractor. The Contractor shall use QCS to track and transmit all submittals. ENG Form 4025, submittal transmittal form, and the submittal register update, ENG Form 4288, shall be produced using QCS. QCS and RMS will be used to update, store and exchange submittal registers and transmittals, but will not be used for storage of actual submittals.

1.7.5. Schedule

The Contractor shall develop a design and construction schedule consisting of pay activities, in accordance with Section 01 32 01.00 10, PROJECT SCHEDULE, as applicable. This schedule shall be input and maintained in the QCS database either manually or by using the Standard Data Exchange Format (SDEF) (see Section 01 32 01.00 10 PROJECT SCHEDULE). The updated schedule data shall be included with each pay request submitted by the Contractor.

1.7.5.1. Import/Export of Data

QCS includes the ability to export Contractor data to the Government and to import submittal register and other Government-provided data from RMS, and schedule data using SDEF.

1.8. IMPLEMENTATION

Contractor use of QCS as described in the preceding paragraphs is mandatory. The Contractor shall ensure that sufficient resources are available to maintain its QCS database, and to provide the Government with regular database updates. QCS shall be an integral part of the Contractor's management of quality control.

1.9. DATA SUBMISSION VIA COMPUTER DISKETTE OR CD-ROM

The Government-preferred method for Contractor's submission of QCS data is by using the government's SFTP repository built into QCS export function.. Other data should be submitted using E-mail with file attachment(s). For locations where this is not feasible, the Contracting Officer may permit use of CD-ROM for data transfer. Data on CDs shall be exported using the QCS built-in export function. If used, CD-ROMs will be submitted in accordance with the following:

1.9.1. File Medium

The Contractor shall submit required data on CD-ROMs. They shall conform to industry standards used in the United States. All data shall be provided in English.

1.9.2. Disk Or Cd-Rom Labels

The Contractor shall affix a permanent exterior label to each diskette and CD-ROM submitted. The label shall indicate in English, the QCS file name, full contract number, contract name, project location, data date, name and telephone number of person responsible for the data.

1.9.3. File Names

The files will be automatically named by the QCS software. The naming convention established by the QCS software shall not be altered in any way by the Contractor.

1.10. MONTHLY COORDINATION MEETING

The Contractor shall update the QCS database each workday. At least monthly, the Contractor shall generate and submit an export file to the Government with schedule update and progress payment request. As required in Contract Clause "Payments", at least one week prior to submittal, the Contractor shall meet with the Government representative to review the planned progress payment data submission for errors and omissions.

The Contractor shall make all required corrections prior to Government acceptance of the export file and progress payment request. Payment requests accompanied by incomplete or incorrect data submittals will be returned. The Government will not process progress payments until an acceptable QCS export file is received.

1.11. NOTIFICATION OF NONCOMPLIANCE

The Contracting Officer will notify the Contractor of any detected noncompliance with the requirements of this specification. The Contractor shall take immediate corrective action after receipt of such notice. Such notice, when delivered to the Contractor at the work site, shall be deemed sufficient for the purpose of notification.

End of Section 01 45 01.10

SECTION 01 45 04.00 10
CONTRACTOR QUALITY CONTROL

1.0 GENERAL

1.1. REFERENCES

1.2. PAYMENT

2.0 PRODUCTS (NOT APPLICABLE)

3.0 EXECUTION

3.1. GENERAL REQUIREMENTS

3.2. QUALITY CONTROL PLAN

3.3. COORDINATION MEETING

3.4. QUALITY CONTROL ORGANIZATION

3.5. SUBMITTALS AND DELIVERABLES

3.6. CONTROL

3.7. TESTS

3.8. COMPLETION INSPECTION

3.9. DOCUMENTATION

3.10. NOTIFICATION OF NONCOMPLIANCE

1.0 GENERAL

1.1. REFERENCES

The publications listed below form a part of this specification to the extent referenced. The publications are referred to within the text by the basic designation only. Refer to the latest edition, as of the date of the contract solicitation.

- ASTM INTERNATIONAL (ASTM)
- ASTM D 3740 Minimum Requirements for Agencies

  Engaged in the Testing and/or Inspection
  of Soil and Rock as Used in Engineering
  Design and Construction
- ASTM E 329 Agencies Engaged in the Testing

  and/or Inspection of Materials Used in
  Construction
- U.S. ARMY CORPS OF ENGINEERS (USACE)

  ER 1110-1-12 Quality Management

1.2. PAYMENT

There will be no separate payment for providing and maintaining an effective Quality Control program. Include all costs associated therewith in the applicable unit prices or lump-sum prices contained in the Contract Line Item Schedule.

2.0 PRODUCTS (Not Applicable)

3.0 EXECUTION

3.1. GENERAL REQUIREMENTS

The Contractor is responsible for quality control and shall establish and maintain an effective quality control system in compliance with the Contract Clause titled "Inspection of Construction." The quality control system shall consist of plans, procedures, and organization necessary to produce an end product, which complies with the contract requirements. The system shall cover all design and construction operations, both onsite and offsite, and shall be keyed to the proposed design and construction sequence. The site project superintendent is responsible for the quality of work on the job and is subject to removal by the Contracting Officer for non-compliance with the quality requirements specified in the contract. The site project superintendent in this context shall be the highest level manager at the site, responsible for the overall site activities, including but not limited to quality and production. The site project superintendent shall maintain a physical presence at the site at all times, except as otherwise acceptable to the Contracting Officer, and shall be responsible for all construction and construction related activities at the site. Different contractors have different names for the on-site overall project supervisor. For clarification, the term “site project superintendent” refers to the Contractor’s senior site representative or “on-site manager”, or other similar title, as those terms are used in contract Clause 52.236-7, “Superintendence by the Contractor” and in the Division 00 Section(s) of the solicitation for this contract or task order,.or elsewhere in the contract. It does not refer to a construction superintendent, unless that person is also the Contractor’s permanently assigned senior site representative in charge of all on-site activities.

3.2. QUALITY CONTROL PLAN

Furnish for Government review, not later than 30 days after receipt of notice to proceed, the Contractor Quality Control (CQC) Plan proposed to implement the requirements of the Contract Clause titled "Inspection of Construction." The plan shall identify personnel, procedures, control, instructions, tests, records, and forms to be used. The Government will consider an interim plan for the first 30 days of operation. Design and construction may begin only after acceptance of the CQC Plan or acceptance of an interim plan applicable to the particular feature of work to be started. The Government will not permit work outside of the features of work included in an accepted interim plan to begin until acceptance of a CQC Plan or another interim plan containing the additional features of work to be started. Where the applicable Code issued by the International Code Council calls for an inspection by the Building Official, the Contractor shall include the inspections in the Quality Control Plan and shall perform the inspections. The Designer of Record shall develop a program for any special inspections required by the applicable International Codes and the Contractor shall perform these inspections, using qualified inspectors. Include the special inspection plan in the QC Plan.

3.2.1. Content of the CQC Plan

The CQC Plan shall include, as a minimum, the following to cover all design and construction operations, both onsite and offsite, including work by subcontractors, fabricators, suppliers, and purchasing agents subcontractors, designers of record, consultants, architect/engineers (AE), fabricators, suppliers, and purchasing agents:

3.2.1.1. A description of the quality control organization. Include a chart showing lines of authority and an acknowledgment that the CQC staff shall implement the three phase control system for all aspects of the work specified. A CQC System Manager shall report to the project superintendent or someone higher in the contractor's organization.

3.2.1.2. The name, qualifications (in resume format), duties, responsibilities, and authorities of each person assigned a CQC function. Also include those responsible for performing and documenting the inspections required by the International Codes and the special inspection program developed by the designer of record.

3.2.1.3. A copy of the letter to the CQC System Manager, signed by an authorized official of the firm, which describes the responsibilities and delegates sufficient authorities to adequately perform the functions of the CQC System Manager, including authority to stop work which is not in compliance with the contract. The CQC System Manager shall issue letters of direction to all other various quality control representatives outlining duties, authorities, and responsibilities. Furnish copies of these letters.

3.2.1.4. Procedures for scheduling, reviewing, certifying, and managing submittals, including those of subcontractors, offsite fabricators, suppliers, and purchasing agents subcontractors, designers of record, consultants, architect engineers (AE), offsite fabricators, suppliers, and purchasing agents. These procedures shall be in accordance with Section 01 33 00 SUBMITTAL PROCEDURES.

3.2.1.5. Control, verification, and acceptance testing procedures for each specific test to include the test name, specification paragraph requiring test, feature of work to be tested, test frequency, and person responsible for each test. Use only Government approved Laboratory facilities.

3.2.1.6. Procedures for tracking preparatory, initial, and follow-up control phases and control, verification, and acceptance tests including documentation.

3.2.1.7. Procedures for tracking design and construction deficiencies from identification through acceptable corrective action. These procedures shall establish verification that identified deficiencies have been corrected.

3.2.1.8. Reporting procedures, including proposed reporting formats.

3.2.1.9. A list of the definable features of work. A definable feature of work is a task, which is separate and distinct from other tasks, has separate control requirements, and may be identified by different trades or disciplines, or it may be work by the same trade in a different environment. Although each section of the specifications may generally be considered as a definable feature of work, there are frequently more than one definable feature under a particular section. This list will be agreed upon during the coordination meeting.

3.2.1.10. A list of all inspections required by the International Codes and the special inspection program required by the code and this contract.

3.2.2. Additional Requirements for Design Quality Control (DQC) Plan

The following additional requirements apply to the Design Quality Control (DQC) plan:

3.2.2.1. The Contractor's QCP Plan shall provide and maintain a Design Quality Control (DQC) Plan as an effective quality control program which will assure that all services required by this design-build contract are performed and provided in a manner that meets professional architectural and engineering quality standards. As a minimum, competent, independent reviewers identified in the DQC Plan shall review all documents. Use personnel who were not involved in the design effort to produce the design to perform the independent technical review (ITR). The ITR is intended as a quality control check of the design. Include, at least, but not necessarily limited to, a review of the contract requirements (the accepted contract or task order proposal and amended RFP), the basis of design, design calculations, the design configuration management documentation and check the design documents for errors, omissions, and for coordination and design integration. The ITR team is not required to examine, compare or comment concerning alternate design solutions but should concentrate on ensuring that the design meets the contract requirements. Correct errors and deficiencies in the design documents prior to submitting them to the Government.

3.2.2.2. Include in the DQC Plan the discipline-specific checklists to be used during the design and quality control of each submittal. Submit these completed checklists at each design phase as part of the project documentation.

3.2.2.3. A Design Quality Control Manager, who has the responsibility of being cognizant of and assuring that all documents on the project have been coordinated, shall implement the DQC Plan This individual shall be a person who has verifiable engineering or architectural design experience and is a registered professional engineer or architect. Notify the Government, in writing, of the name of the individual, and the name of an alternate person assigned to the position.

3.2.2.4. Develop and maintain effective, acceptable design configuration management (DCM) procedures to control and track all revisions to the design documents after the Interim Design Submission through submission of the As-Built documents. Include the DCM plan as a subset of the DQC Plan. See Section ‘Design After Award’.

3.2.3. Acceptance of Plan

Government acceptance of the Contractor's plan is required prior to the start of design and construction. Acceptance is conditional and will be predicated on satisfactory performance during the design and construction. The Government reserves the right to require the Contractor to make changes in his CQC Plan and operations including removal of personnel, as necessary, to obtain the quality specified.

3.2.4. Notification of Changes

After acceptance of the CQC Plan, notify the Government in writing of any proposed change. Proposed changes are subject to Government acceptance.

3.3. COORDINATION MEETING

After the Postaward Conference, before start of design or construction, and prior to acceptance by the Government of the CQC Plan, the Contractor and the Government shall meet and discuss the Contractor's quality control system. Submit the CQC Plan for review a minimum of 7 calendar days prior to the Coordination Meeting. During the meeting, a mutual understanding of the system details shall be developed, including the forms for recording the CQC operations, design activities, control activities, testing, administration of the system for both onsite and offsite work, and the interrelationship of Contractor's Management and control with the Government's Quality Assurance. The Government will prepare minutes of the meeting for signature by both parties. . The minutes shall become a part of the contract file. There may be occasions when either party will call for subsequent conferences to reconfirm mutual understandings and/or address deficiencies in the CQC system or procedures which may require corrective action by the Contractor.

3.4. QUALITY CONTROL ORGANIZATION

3.4.1. Personnel Requirements

The requirements for the CQC organization are a CQC System Manager, a Design Quality Manager, and sufficient number of additional qualified personnel to ensure contract compliance. The CQC organization shall also include personnel identified in the technical provisions as requiring specialized skills to assure the required work is being performed properly. The Contractor's CQC staff shall maintain a presence at the site at all times during progress of the work and have complete authority and responsibility to take any action necessary to ensure contract compliance. The CQC staff shall be subject to acceptance by the Contracting Officer. Provide adequate office space, filing systems and other resources as necessary to maintain an effective and fully functional CQC organization. Promptly furnish complete records of all letters, material submittals, shop drawing submittals, schedules and all other project documentation to the CQC organization. The CQC organization shall be responsible to maintain these documents and records at the site at all times, except as otherwise acceptable to the Contracting Officer.

3.4.2. CQC System Manager

Identify as CQC System Manager an individual within the onsite work organization who shall be responsible for overall management of CQC and have the authority to act in all CQC matters for the Contractor. The CQC System Manager shall be a graduate engineer, graduate architect, or a BA/BS graduate of an ACCE accredited construction management college program. The CQC system Manager may alternately be an engineering technician with at least 2 years of college and an ICC certification as a Commercial Building Inspector (Residential Building Inspector certification will be required for Military Family Housing projects). In addition, the CQC system manager shall have a minimum of 5 years construction experience on construction similar to this contract. The CQC System Manager shall be on the site at all times during construction and shall be employed by the prime Contractor. Assign the CQC System Manager no other duties (except may also serve as Safety and Health Officer, if qualified and if allowed by Section 00 73 00, or by Section 00 73 10 if this is a task order). Identify an alternate for the CQC System Manager in the plan to serve in the event of the System Manager's absence. The requirements for the alternate shall be the same as for the designated CQC System Manager but the alternate may have other duties in addition to serving in a temporary capacity as the acting QC manager.

3.4.3. CQC Personnel

3.4.3.1. In addition to CQC personnel specified elsewhere in the contract provide specialized CQC personnel to assist the CQC System Manager in accordance with paragraph titled Area Qualifications.

3.4.3.2. These individuals may be employees of the prime or subcontractor; be responsible to the CQC System Manager; **are not intended to be full time, but must be physically present at the construction site during work on their areas of responsibility**; have the necessary education and/or

experience in accordance with the experience matrix listed herein. These individuals may perform other duties but must be allowed sufficient time to perform their assigned quality control duties as described in the Quality Control Plan. **One person may cover more than one area, provided that they are qualified to perform QC activities for the designated areas below and provided that they have adequate time to perform their duties:**

3.4.4. Experience Matrix

3.4.4.1. Area Qualifications

3.4.4.1.1. Civil - Graduate Civil Engineer or (BA/BS) graduate in construction management with 4 years experience in the type of work being performed on this project or engineering technician with 5 yrs related experience.

3.4.4.1.2. Mechanical - Graduate Mechanical Engineer or (BA/BS) graduate in construction management with 4 yrs related experience or engineering technician with an ICC certification as a Commercial Mechanical Inspector with 5 yrs related experience.

3.4.4.1.3. Electrical - Graduate Electrical Engineer or (BA/BS) graduate in construction management with 4 yrs related experience or engineering technician with an ICC certification as a Commercial Electrical Inspector with 5 yrs related experience.

3.4.4.1.4. Structural - Graduate Structural Engineer or (BA/BS) graduate in construction management with 4 yrs related experience or person with an ICC certification as a Reinforced Concrete Special Inspector and Structural Steel and Bolting Special Inspector (as applicable to the type of construction involved) with 5 yrs related experience.

3.4.4.1.5. Plumbing - Graduate Mechanical Engineer or (BA/BS) graduate in construction management with 4 yrs related experience, or person with an ICC certification as a Commercial Plumbing Inspector with 5 yrs related experience.

3.4.4.1.6. Concrete, Pavements and Soils Materials Technician (present while performing tests) with 2 yrs experience for the appropriate area

3.4.4.1.7. Testing, Adjusting and Balancing Specialist must be a member (TAB) Personnel of AABC or an experienced technician of the firm certified by the NEBB (present while testing, adjusting, balancing).

3.4.4.1.8. Design Quality Control Manager Registered Architect or Professional Engineer (not required on the construction site)

3.4.4.1.9. Registered Fire Protection Engineer with 4 years related experience or engineering technician with 5 yrs related experience (but see requirements for Fire Protection Engineer of Record to witness final testing in Section 01 10 00, paragraph 5.10, Fire Protection).

3.4.4.1.10. QC personnel assigned to the installation of the telecommunication system or any of its components shall be Building Industry Consulting Services International (BICSI) Registered Cabling Installers, Technician Level. Submit documentation of current BICSI certification. In lieu of BICSI certification, QC personnel shall have a minimum of 5 years experience in the installation of the specified copper and fiber optic cable and components. They shall have factory or factory approved certification from each equipment manufacturer indicating that they are qualified to install and test the provided products. QC personnel shall witness and certify the testing of telecommunications cabling and equipment.

3.4.5. Additional Requirement

In addition to the above experience and/or education requirements the CQC System Manager shall have completed the course entitled "Construction Quality Management for Contractors". This course is periodically offered at various locations throughout Savannah District (GA & NC). Inquire of the District or Division sponsoring the course for fees and other expenses involved, if any, for attendance at this course.

3.4.6. Organizational Changes

When it is necessary to make changes to the CQC staff, the Contractor shall revise the CQC Plan to reflect the changes and submit the changes to the Contracting Officer for acceptance.

3.5. SUBMITTALS AND DELIVERABLES

Make submittals as specified in Section 01 33 00 ***SUBMITTAL PROCEDURES***. The CQC organization shall certify that all submittals and deliverables are in compliance with the contract requirements.

3.6. CONTROL

Contractor Quality Control is the means by which the Contractor ensures that the construction, to include that of subcontractors and suppliers, complies with the requirements of the contract. The CQC organization shall conduct at least three phases of control for each definable feature of the construction work as follows:

3.6.1. Preparatory Phase

Perform this phase prior to beginning work on each definable feature of work, after all required plans/documents/materials are approved/accepted, and after copies are at the work site. This phase shall include:

3.6.1.1. A review of each paragraph of applicable specifications, reference codes, and standards. Make a copy of those sections of referenced codes and standards applicable to that portion of the work to be accomplished in the field at the preparatory inspection. Maintain these copies in the field, available for use by Government personnel until final acceptance of the work.

3.6.1.2. A review of the contract drawings.

3.6.1.3. A check to assure that all materials and/or equipment have been tested, submitted, and approved.

3.6.1.4. Review of provisions that have been made to provide required control inspection and testing.

3.6.1.5. Examination of the work area to assure that all required preliminary work has been completed and is in compliance with the contract.

3.6.1.6. A physical examination of required materials, equipment, and sample work to assure that they are on hand, conform to approved shop drawings or submitted data, and are properly stored.

3.6.1.7. A review of the appropriate activity hazard analysis to assure safety requirements are met.

3.6.1.8. Discussion of procedures for controlling quality of the work including repetitive deficiencies. Document construction tolerances and workmanship standards for that feature of work.

3.6.1.9. A check to ensure that the portion of the plan for the work to be performed has been accepted by the Contracting Officer.

3.6.1.10. Discussion of the initial control phase.

3.6.1.11. Notify the Government at least 24 hours in advance of beginning the preparatory control phase. This phase shall include a meeting conducted by the CQC System Manager and attended by the superintendent, other CQC personnel (as applicable), and the foreman responsible for the definable feature. Document the results of the preparatory phase actions by separate minutes prepared by the CQC System Manager and attached to the daily CQC report. The Contractor shall instruct applicable workers as to the acceptable level of workmanship required in order to meet contract specifications.

3.6.2. Initial Phase

Accomplish this phase at the beginning of a definable feature of work. Include the following actions:

3.6.2.1. Check work to ensure that it is in full compliance with contract requirements. Review minutes of the preparatory meeting.

3.6.2.2. Verify adequacy of controls to ensure full contract compliance. Verify required control inspection and testing.

3.6.2.3. Establish level of workmanship and verify that it meets minimum acceptable workmanship standards. Compare with required sample panels as appropriate.

3.6.2.4. Resolve all differences.

3.6.2.5. Check safety to include compliance with and upgrading of the Accident Prevention plan and activity hazard analysis. Review the activity analysis with each worker.

3.6.2.6. Notify the Government at least 24 hours in advance of beginning the initial phase. The CQC System Manager shall prepare and attach to the daily CQC report separate minutes of this phase. Indicate exact location of initial phase for future reference and comparison with follow-up phases.

3.6.2.7. Repeat the initial phase any time acceptable specified quality standards are not being met.

3.6.3. Follow-up Phase

Perform daily checks to assure control activities, including control testing, are providing continued compliance with contract requirements, until completion of the particular feature of work. The checks shall be made a matter of record in the CQC documentation. Conduct final follow-up checks and correct deficiencies prior to the start of additional features of work which may be affected by the deficient work. Do not build upon nor conceal non-conforming work.

3.6.4. Additional Preparatory and Initial Phases

Conduct additional preparatory and initial phases on the same definable features of work if: the quality of on-going work is unacceptable; if there are changes in the applicable CQC staff, onsite production supervision or work crew; if work on a definable feature is resumed after a substantial period of inactivity; or if other problems develop.

3.7. TESTS

3.7.1. Testing Procedure

Perform specified or required tests to verify that control measures are adequate to provide a product which conforms to contract requirements and project design documents. Upon request, furnish to the Government duplicate samples of test specimens for possible testing by the Government. Testing includes operation and/or acceptance tests when specified. The Contractor shall procure the services of a Corps of Engineers approved testing laboratory, or establish an approved testing laboratory at the project

site. The Contractor may elect to use a laboratory certified and accredited by the Concrete and cement Reference Laboratory (CCRL) or by AASHTO Materials Reference Laboratory (AMRL) for testing procedures that those organizations certify. The Contractor shall perform the following activities and record and provide the following data:

3.7.1.1. Verify that testing procedures comply with contract requirements and project design documents.

3.7.1.2. Verify that facilities and testing equipment are available and comply with testing standards.

3.7.1.3. Check test instrument calibration data against certified standards.

3.7.1.4. Verify that recording forms and test identification control number system, including all of the test documentation requirements, have been prepared.

3.7.1.5. Include results of all tests taken, both passing and failing tests, recorded on the CQC report for the date taken. Include specification paragraph reference, location where tests were taken, and the sequential control number identifying the test. If approved by the Contracting Officer, actual test reports may be submitted later with a reference to the test number and date taken. Provide an information copy of tests performed by an offsite or commercial test facility directly to the Contracting Officer. Failure to submit timely test reports as stated may result in nonpayment for related work performed and disapproval of the test facility for this contract.

3.7.2. Testing Laboratories

3.7.2.1. Capability Check

The Government reserves the right to check laboratory equipment in the proposed laboratory for compliance with the standards set forth in the contract specifications and to check the laboratory technician's testing procedures and techniques. Laboratories utilized for testing soils, concrete, asphalt, and steel shall meet criteria detailed in ASTM D 3740 and ASTM E 329.

3.7.2.2. Capability Recheck

If the selected laboratory fails the capability check, the Government will assess the Contractor a charge of $1,375 to reimburse the Government for each succeeding recheck of the laboratory or the checking of a subsequently selected laboratory. Such costs will be deducted from the contract amount due the Contractor.

3.7.3. Onsite Laboratory

The Government reserves the right to utilize the Contractor's control testing laboratory and equipment to make assurance tests, and to check the Contractor's testing procedures, techniques, and test results at no additional cost to the Government.

3.7.4. Furnishing or Transportation of Samples for Government Quality Assurance Testing

The Contractor is responsible for costs incidental to the transportation of samples or materials. Deliver samples of materials for test verification and acceptance testing by the Government to the Corps of Engineers Laboratory, f.o.b., at the following address:

- For delivery by mail:

  [Not Supplied - ConstructionReqQC : LAB_NAME]

  [Not Supplied - ConstructionReqQC : LAB_ATTN]

  [Not Supplied - ConstructionReqQC : LAB_MAIL]

[Not Supplied - ConstructionReqQC : LAB_STATE]

- For other deliveries:

  [Not Supplied - ConstructionReqQC : LAB_NAME_OTHER]

  [Not Supplied - ConstructionReqQC : LAB_ATTN_OTHER]

  [Not Supplied - ConstructionReqQC : LAB_MAIL_OTHER]

  [Not Supplied - ConstructionReqQC : LAB_STATE_OTHER]

The area or resident office will coordinate, exact delivery location, and dates for each specific test.

3.8. COMPLETION INSPECTION

3.8.1. Punch-Out Inspection

Near the end of the work, or any increment of the work established by a time stated in the SPECIAL CONTRACT REQUIREMENTS Clause, "Commencement, Prosecution, and Completion of Work", or by the specifications, the CQC Manager shall conduct an inspection of the work. Prepare a punch list of items which do not conform to the approved drawings and specifications and include in the CQC documentation, as required by paragraph DOCUMENTATION. The list of deficiencies shall include the estimated date by which the deficiencies will be corrected. The CQC System Manager or staff shall make a second inspection to ascertain that all deficiencies have been corrected. Once this is accomplished, the Contractor shall notify the Government that the facility is ready for the Government Pre-Final inspection.

3.8.2. Pre-Final Inspection

As soon as practicable after the notification above, the Government will perform the pre-final inspection to verify that the facility is complete and ready to be occupied. A Government Pre-Final Punch List may be developed as a result of this inspection. The Contractor's CQC System Manager shall ensure that all items on this list have been corrected before notifying the Government, so that a Final inspection with the customer can be scheduled. Correct any items noted on the Pre-Final inspection in a timely manner. Accomplish these inspections and any deficiency corrections required by this paragraph within the time slated for completion of the entire work or any particular increment of the work if the project is divided into increments by separate completion dates.

3.8.3. Final Acceptance Inspection

The Contractor's Quality Control Inspection personnel, plus the superintendent or other primary management person, and the Contracting Officer's Representative shall attend the final acceptance inspection. Additional Government personnel including, but not limited to, those from Base/Post Civil Facility Engineer user groups and major commands may also attend. The Government will formally schedule the final acceptance inspection based upon results of the Pre-Final inspection. Provide notice to the Government at least 14 days prior to the final acceptance inspection and include the Contractor's assurance that all specific items previously identified to the Contractor as being unacceptable, along with all remaining work performed under the contract, will be complete and acceptable by the date scheduled for the final acceptance inspection. Failure of the Contractor to have all contract work acceptably complete for this inspection will be cause for the Contracting Officer to bill the Contractor for the Government's additional inspection cost in accordance with the contract clause titled "Inspection of Construction".

3.9. DOCUMENTATION

3.9.1. Maintain current records providing factual evidence that required quality control activities and/or tests have been performed. These records shall include the work of subcontractors and suppliers using

government-provided software, QCS (see Section 01 45 01.10). The report includes, as a minimum, the following information:

3.9.1.1. Contractor/subcontractor and their area of responsibility.

3.9.1.2. Operating plant/equipment with hours worked, idle, or down for repair.

3.9.1.3. Work performed each day, giving location, description, and by whom. When Network Analysis (NAS) is used, identify each phase of work performed each day by NAS activity number.

3.9.1.4. Test and/or control activities performed with results and references to specifications/drawings requirements. Identify the applicable control phase (Preparatory, Initial, Follow-up). List deficiencies noted, along with corrective action.

3.9.1.5. Quantity of materials received at the site with statement as to acceptability, storage, and reference to specifications/drawings requirements.

3.9.1.6. Submittals and deliverables reviewed, with contract reference, by whom, and action taken.

3.9.1.7. Offsite surveillance activities, including actions taken.

3.9.1.8. Job safety evaluations stating what was checked, results, and instructions or corrective actions.

3.9.1.9. Instructions given/received and conflicts in plans and/or specifications.

3.9.1.10. Provide documentation of design quality control activities. For independent design reviews, provide, as a minimum, identity of the ITR team, the ITR review comments, responses and the record of resolution of the comments.

3.9.2. Contractor's verification statement.

These records shall indicate a description of trades working on the project; the number of personnel working; weather conditions encountered; and any delays encountered. These records shall cover both conforming and deficient features and shall include a statement that equipment and materials incorporated in the work and workmanship comply with the contract. Furnish the original and one copy of these records in report form to the Government daily within 24 hours after the date covered by the report, except that reports need not be submitted for days on which no work is performed. As a minimum, submit one report for every 7 days of no work and on the last day of a no work period. Account for all calendar days throughout the life of the contract. The first report following a day of no work shall be for that day only. The CQC System Manager shall sign and date reports. The report shall include copies of test reports and copies of reports prepared by all subordinate quality control personnel. The Contractor may submit these forms electronically, in lieu of hard copy.

3.10. NOTIFICATION OF NONCOMPLIANCE

The Contracting Officer will notify the Contractor of any detected noncompliance with the foregoing requirements. The Contractor shall take immediate corrective action after receipt of such notice. Such notice, when delivered to the Contractor at the work site, shall be deemed sufficient for the purpose of notification. If the Contractor fails or refuses to comply promptly, the Contracting Officer may issue an order stopping all or part of the work until satisfactory corrective action has been taken. No part of the time lost due to such stop orders shall be made the subject of claim for extension of time or for excess costs or damages by the Contractor.

End of Section 01 45 04.00 10

SECTION 01 50 02
TEMPORARY CONSTRUCTION FACILITIES

1.0 OVERVIEW

1.1. GENERAL REQUIREMENTS

1.2. AVAILABILITY AND USE OF UTILITY SERVICES

1.3. BULLETIN BOARD, PROJECT SIGN, AND PROJECT SAFETY SIGN

1.4. PROTECTION AND MAINTENANCE OF TRAFFIC

1.5. MAINTENANCE OF CONSTRUCTION SITE

1.0 OVERVIEW

1.1. GENERAL REQUIREMENTS

1.1.1. Site Plan

Prepare a site plan indicating the proposed location and dimensions of any area to be fenced and used by the Contractor, the number of trailers to be used, avenues of ingress/egress to the fenced area and details of the fence installation. Identify any areas which may have to be graveled to prevent the tracking of mud. Also indicate if the use of a supplemental or other staging area is desired.

1.2. AVAILABILITY AND USE OF UTILITY SERVICES

1.2.1. See Section 00 72 00, Contract Clauses and Section 00 73 00, Special Contract Requirements, for Utility Availability requirements.

1.2.2. Sanitation

Provide and maintain within the construction area minimum field-type sanitary facilities approved by the Contracting Officer. Government toilet facilities will not be available to Contractor's personnel.

1.2.3. Telephone

Make arrangements and pay all costs for desired telephone facilities.

1.3. BULLETIN BOARD, PROJECT SIGN, AND PROJECT SAFETY SIGN

1.3.1. Bulletin Board

Immediately upon beginning of onsite work, provide a weatherproof glass-covered bulletin board not less than 36 by 48 inches in size for displaying the Equal Employment Opportunity poster, a copy of the wage decision contained in the contract, Wage Rate Information poster, and other information approved by the Contracting Officer. Locate the bulletin board at the project site in a conspicuous place easily accessible to all employees, as approved by the Contracting Officer. Display legible copies of the aforementioned data until work is completed. Remove the bulletin board from the site upon completion of the project.

1.3.2. Project and Safety Signs

Erect a project sign and a site safety sign with informational details as provided by the Government at the Post award conference, within 15 days prior to any work activity on project site. Update the safety sign data daily, with light colored metallic or non-metallic numerals. Remove the signs from the site upon completion of the project. Engineer Pamphlet EP 310-1-6a contains the standardized layout and construction details for the signs. It can be found through a GOOGLE Search or try the US Army Corps of Engineers Techinfo Website at http://www.hnd.usace.army.mil/techinfo/. Click on Publications then go to Engineer Pamphlets and select EP 310-1-6a.

1.4. PROTECTION AND MAINTENANCE OF TRAFFIC

Provide access and temporary relocated roads as necessary to maintain traffic. Maintain and protect traffic on all affected roads during the construction period except as otherwise specifically directed by the Contracting Officer. Take measures for the protection and diversion of traffic, including the provision of watchmen and flagmen, erection of barricades, placing of lights around and in front of equipment and the work, and the erection and maintenance of adequate warning, danger, and direction signs, as required by the State and local authorities having jurisdiction. Protect the traveling public from damage to person and property.

The Contractor's traffic on roads selected for hauling material to and from the site shall interfere as little as possible with public traffic. Investigate the adequacy of existing roads and the allowable load limit on these roads. Repair any damage to roads caused by construction operations.

1.4.1. Haul Roads

The Contractor shall, at its own expense, construct access and haul roads necessary for proper prosecution of the work under this contract. Construct haul roads with suitable grades and widths. Avoid sharp curves, blind corners, and dangerous cross traffic. Provide necessary lighting, signs, barricades, and distinctive markings for the safe movement of traffic. The method of dust control, although optional, shall be adequate to ensure safe operation at all times. Location, grade, width, and alignment of construction and hauling roads shall be subject to approval by the Contracting Officer. Provide adequate lighting to assure full and clear visibility for full width of haul road and work areas during any night work operations. Remove haul roads designated by the Contracting Officer upon completion of the work and restore those areas.

1.4.2. Barricades

Erect and maintain temporary barricades to limit public access to hazardous areas. Barricades shall be required whenever safe public access to paved areas such as roads, parking areas or sidewalks is prevented by construction activities or as otherwise necessary to ensure the safety of both pedestrian and vehicular traffic. Securely place barricades clearly visible with adequate illumination to provide sufficient visual warning of the hazard during both day and night.

1.5. MAINTENANCE OF CONSTRUCTION SITE

Mow grass and vegetation located within the boundaries of the construction site for the duration of the project, from NTP to contract completion. Edge or neatly trim grass and vegetation along fences, buildings, under trailers, and in areas not accessible to mowers from NTP to contract completion.

End of Section 01 50 02

SECTION 01 57 20.00 10
ENVIRONMENTAL PROTECTION

1.0 GENERAL REQUIREMENTS

1.1. SUBCONTRACTORS

1.2. ENVIRONMENTAL PROTECTION PLAN

1.3. PROTECTION FEATURES

1.4. ENVIRONMENTAL ASSESSMENT OF CONTRACT DEVIATIONS

1.5. NOTIFICATION

2.0 PRODUCTS (NOT USED)

3.0 EXECUTION

3.1. LAND RESOURCES

3.2. WATER RESOURCES

3.3. AIR RESOURCES

3.4. CHEMICAL MATERIALS MANAGEMENT AND WASTE DISPOSAL

3.5. RECYCLING AND WASTE MINIMIZATION

3.6. HISTORICAL, ARCHAEOLOGICAL, AND CULTURAL RESOURCES

3.7. BIOLOGICAL RESOURCES

3.8. INTEGRATED PEST MANAGEMENT

3.9. PREVIOUSLY USED EQUIPMENT

3.10. MILITARY MUNITIONS

3.11. TRAINING OF CONTRACTOR PERSONNEL

3.12. POST CONSTRUCTION CLEANUP

1.0 GENERAL REQUIREMENTS

Minimize environmental pollution and damage that may occur as the result of construction operations. Protect the environmental resources within the project boundaries and those affected outside the limits of permanent work during the entire duration of this contract. Comply with all applicable environmental Federal, State, and local laws and regulations. The Contractor shall be responsible for any delays resulting from failure to comply with environmental laws and regulations

1.1. SUBCONTRACTORS

Ensure compliance with this section by subcontractors.

1.2. ENVIRONMENTAL PROTECTION PLAN

1.2.1. The purpose of the Environmental Protection Plan is to present a comprehensive overview of known or potential environmental issues which the Contractor must address during construction. Define issues of concern within the Environmental Protection Plan as outlined in this section. Address each topic in the plan at a level of detail commensurate with the environmental issue and required construction task(s). Identify and discuss topics or issues which are not identified in this section, but which the Contractor considers necessary, after those items formally identified in this section. Prior to commencing construction activities or delivery of materials to the site, submit the Plan for review and Government approval. The Contractor shall meet with the Government prior to implementation of the Environmental Protection Plan, for the purpose of discussing the implementation of the initial plan; possible subsequent additions and revisions to the plan including any reporting requirements; and methods for administration of the Contractor's Environmental Plans. Maintain and keep the Environmental Protection Plan current onsite.

1.2.2. Compliance

No requirement in this Section shall be construed as relieving the Contractor of any applicable Federal, State, and local environmental protection laws and regulations. During Construction, the Contractor shall be responsible for identifying, implementing, and submitting for approval any additional requirements to be included in the Environmental Protection Plan.

1.2.3. Contents

The plan shall include, but shall not be limited to, the following:

1.2.3.1. Name(s) of person(s) within the Contractor's organization who is(are) responsible for ensuring adherence to the Environmental Protection Plan.

1.2.3.2. Name(s) and qualifications of person(s) responsible for manifesting hazardous waste to be removed from the site, if applicable

1.2.3.3. Name(s) and qualifications of person(s) responsible for training the Contractor's environmental protection personnel

1.2.3.4. Description of the Contractor's environmental protection personnel training program

1.2.3.5. An erosion and sediment control plan which identifies the type and location of the erosion and sediment controls to be provided. Include monitoring and reporting requirements to assure that the control measures are in compliance with the erosion and sediment control plan, Federal, State, and local laws and regulations. A Storm Water Pollution Prevention Plan (SWPPP) may be substituted for this plan.

1.2.3.6. Drawings showing locations of proposed temporary excavations or embankments for haul roads, stream crossings, material storage areas, structures, sanitary facilities, and stockpiles of excess or spoil materials including methods to control runoff and to contain materials on the site

1.2.3.7. Traffic control plans including measures to reduce erosion of temporary roadbeds by construction traffic, especially during wet weather. Include measures to minimize the amount of mud transported onto paved public roads by vehicles or runoff.

1.2.3.8. Work area plan showing the proposed activity in each portion of the area and identifying the areas of limited use or nonuse. Include measures for marking the limits of use areas including methods for protection of features to be preserved within authorized work areas.

1.2.3.9. Drawing showing the location of on-installation borrow areas.

1.2.3.10. A spill control plan shall include the procedures, instructions, and reports to be used in the event of an unforeseen spill of a substance regulated by 40 CFR 68, 40 CFR 302, 40 CFR 355, and/or regulated under State or Local laws and regulations. The spill control plan supplements the requirements of EM 385-1-1. This plan shall include as a minimum:

(a) The name of the individual who will report any spills or hazardous substance releases and who will follow up with complete documentation. This individual shall immediately notify the Government and the local Fire Department in addition to the legally required Federal, State, and local reporting channels (including the National Response Center 1-800-424-8802) if a reportable quantity is released to the environment. The plan shall contain a list of the required reporting channels and telephone numbers.

(b) The name and qualifications of the individual who will be responsible for implementing and supervising the containment and cleanup

(c) Training requirements for Contractor's personnel and methods of accomplishing the training

(d) A list of materials and equipment to be immediately available at the job site, tailored to cleanup work of the potential hazard(s) identified.

(e) The names and locations of suppliers of containment materials and locations of additional fuel oil recovery, cleanup, restoration, and material-placement equipment available in case of an unforeseen spill emergency

(f) The methods and procedures to be used for expeditious contaminant cleanup

1.2.3.11. A solid waste management plan identifying waste minimization, collection, and disposals methods, waste streams (type and quantity), and locations for solid waste diversion/disposal including clearing debris and C&D waste that is diverted (salvaged, reused, or recycled). Detail the contractor's actions to comply with, and to participate in, Federal, state, regional, local government, and installation sponsored recycling programs to reduce the volume of solid waste at the source. Identify any subcontractors responsible for the transportation, salvage and disposal of solid waste. Submit licenses or permits for solid waste disposal sites that are not a commercial operating facility. Attach evidence of the facility's ability to accept the solid waste to this plan. A construction and demolition waste management plan, similar to the plan specified in the UFGS 01 74 19 (formerly 01572) may be used as the non-hazardous solid waste management plan. Provide a Non-Hazardous Solid Waste Diversion Report. Submit the report on the first working day after the first quarter that non-hazardous solid waste has been disposed and/or diverted and each quarter thereafter (e.g. the first working day of January, April, July, and October) until the end of the project. Additionally, a summary report, with all data fields, is required at the end of the project. The report shall indicate the total type and amount of waste generated, total type and amount of waste diverted, type and amount of waste sent to waste-to-energy facility and alternative daily cover, in tons along with the percent that was diverted. Maintain, track and report construction and demolition waste data in a manner such that the installation can enter the data into the Army SWAR database, which separates data by type of material. A cumulative report in LEED Letter Template format may be used but must be modified to include the date disposed of/diverted and include

the above stated diversion data. NOTE: The Solid Waste Diversion Reports are separate documentation than the LEED documentation.

1.2.3.12. DELETED.

1.2.3.13. An air pollution control plan detailing provisions to assure that dust, debris, materials, trash, etc., do not become air borne and travel off the project site.

1.2.3.14. A contaminant prevention plan that: identifies potentially hazardous substances to be used on the job site; identifies the intended actions to prevent introduction of such materials into the air, water, or ground; and details provisions for compliance with Federal, State, and local laws and regulations for storage and handling of these materials. In accordance with EM 385-1-1, include a copy of the Material Safety Data Sheets (MSDS) and the maximum quantity of each hazardous material to be on site at any given time in the contaminant prevention plan. Update the plan as new hazardous materials are brought on site or removed from the site. Reference this plan in the storm water pollution prevention plan, as applicable.

1.2.3.15. A waste water management plan that identifies the methods and procedures for management and/or discharge of waste waters which are directly derived from construction activities, such as concrete curing water, clean-up water, dewatering of ground water, disinfection water, hydrostatic test water, and water used in flushing of lines. If a settling/retention pond is required, include the design of the pond including drawings, removal plan, and testing requirements for possible pollutants. If land application will be the method of disposal for the waste water, include a sketch showing the location for land application along with a description of the pretreatment methods to be implemented and any required permits. If surface discharge will be the method of disposal, include a copy of the permit and associated documents as an attachment prior to discharging the waste water. If disposal is to a sanitary sewer, include documentation that the waste water treatment plant Operator has approved the flow rate, volume, and type of discharge.

1.2.3.16. A historical, archaeological, cultural resources biological resources and wetlands plan that defines procedures for identifying and protecting historical, archaeological, cultural resources, biological resources and wetlands known to be on the project site: and/or identifies procedures to be followed if historical archaeological, cultural resources, biological resources and wetlands not previously known to be onsite or in the area are discovered during construction. Include methods to assure the protection of known or discovered resources and shall identify lines of communication between Contractor personnel and the Government.

1.2.3.17. A pesticide treatment plan, updated, as information becomes available. Include: sequence of treatment, dates, times, locations, pesticide trade name, EPA registration numbers, authorized uses, chemical composition, formulation, original and applied concentration, application rates of active ingredient (i.e. pounds of active ingredient applied), equipment used for application and calibration of equipment. The Contractor is responsible for Federal, State, Regional and Local pest management record keeping and reporting requirements as well as any additional Installation specific requirements. Follow AR 200-1, Chapter 5, Pest Management, Section 5-4, “Program Requirements” for data required to be reported to the Installation.

1.3. PROTECTION FEATURES

This paragraph supplements the Contract Clause PROTECTION OF EXISTING VEGETATION, STRUCTURES, EQUIPMENT, UTILITIES AND IMPROVEMENTS. Prior to start of any onsite construction activities, the Contractor and the Government shall make a joint condition survey. Immediately following the survey, the Contractor shall prepare a brief report including a plan describing the features requiring protection under the provisions of the Contract Clauses, which are not specifically identified on the drawings as environmental features requiring protection along with the condition of trees, shrubs and grassed areas immediately adjacent to the site of work and adjacent to the Contractor's assigned storage area and access route(s), as applicable. Both the Contractor and the Government will

sign this survey, upon mutual agreement as to its accuracy and completeness. The Contractor develop a plan that depicts how it will protect those environmental features included in the survey report and any indicated on the drawings, regardless of interference which their preservation may cause to the Contractor's work under the contract.

1.4. ENVIRONMENTAL ASSESSMENT OF CONTRACT DEVIATIONS

Any deviations, requested by the Contractor, from the drawings, plans and specifications which may have an environmental impact will be subject to approval by the Government and may require an extended review, processing, and approval time. The Government reserves the right to disapprove alternate methods, even if they are more cost effective, if the Government determines that the proposed alternate method will have an adverse environmental impact.

1.5. NOTIFICATION

The Government will notify the Contractor in writing of any observed noncompliance with Federal, State or local environmental laws or regulations, permits, and other elements of the Contractor's Environmental Protection plan. The Contractor shall, after receipt of such notice, inform the Government of the proposed corrective action and take such action when approved by the Government. The Government may issue an order stopping all or part of the work until satisfactory corrective action has been taken. No time extensions shall be granted or equitable adjustments allowed to the Contractor for any such suspensions. This is in addition to any other actions the Government may take under the contract, or in accordance with the Federal Acquisition Regulation or Federal Law.

2.0 PRODUCTS (NOT USED)

3.0 EXECUTION

3.1. LAND RESOURCES

Confine all activities to areas defined by the drawings and specifications. Prior to the beginning of any construction, identify any land resources to be preserved within the work area. Except in areas indicated on the drawings or specified to be cleared, do not remove, cut, deface, injure, or destroy land resources including trees, shrubs, vines, grasses, topsoil, and land forms without approval. Do not attach or fasten any ropes, cables, or guys to any trees for anchorage unless specifically authorized. Provide effective protection for land and vegetation resources at all times as defined in the following subparagraphs. Remove all stone, soil, or other materials displaced into uncleared areas..

3.1.1. Work Area Limits

Prior to commencing construction activities, mark the areas that need not be disturbed under this contract. Mark or fence isolated areas within the general work area which are not to be disturbed. Protect monuments and markers before construction operations commence. Where construction operations are to be conducted during darkness, any markers shall be visible in the dark. Personnel shall be knowledgeable of the purpose for marking and/or protecting particular objects.

3.1.2. Landscape

Clearly identify trees, shrubs, vines, grasses, land forms and other landscape features indicated and defined on the drawings to be preserved by marking, fencing, or wrapping with boards, or any other approved techniques. Restore landscape features damaged or destroyed during construction operations outside the limits of the approved work area.

3.1.3. Erosion and Sediment Controls

Provide erosion and sediment control measures in accordance with Federal, State, and local laws and regulations. Coordinate with approving authorities (federal, state, etc.) for specific requirements to be included in the plan. The erosion and sediment controls selected and maintained by the Contractor shall be such that water quality standards are not violated as a result of the Contractor's construction activities. Keep the area of bare soil exposed at any one time by construction operations to a minimum necessary. Construct or install temporary and permanent erosion and sediment control best management practices (BMPs). BMPs may include, but not be limited to, vegetation cover, stream bank stabilization, slope stabilization, silt fences, construction of terraces, interceptor channels, sediment traps, inlet and outfall protection, diversion channels, and sedimentation basins. Remove any temporary measures after the area has been stabilized.

3.1.4. Contractor Facilities and Work Areas

Place field offices, staging areas, stockpile storage, and temporary buildings in areas designated on the drawings or as directed by the Government. Make only approved temporary movement or relocation of Contractor facilities. Provide erosion and sediment controls for on-site borrow and spoil areas to prevent sediment from entering nearby waters. Control temporary excavation and embankments for plant and/or work areas to protect adjacent areas.

3.2. WATER RESOURCES

Monitor construction activities to prevent pollution of surface and ground waters. Do not apply toxic or hazardous chemicals to soil or vegetation unless otherwise indicated. Monitor all water areas affected by construction activities. For construction activities immediately adjacent to impaired surface waters, the Contractor shall be capable of quantifying sediment or pollutant loading to that surface water when required by state or federally issued Clean Water Act permits.

3.2.1. Stream Crossings

Stream crossings shall allow movement of materials or equipment without violating water pollution control standards of the Federal, State, and local governments or impede state-designated flows.

3.2.2. Wetlands

Do not enter, disturb, destroy, or allow discharge of contaminants into any wetlands.

3.3. AIR RESOURCES

Comply with all Federal and State air emission and performance laws and standards for equipment operation, activities, or processes.

3.3.1. Particulates

Control dust particles; aerosols and gaseous by-products from construction activities; and processing and preparation of materials, such as from asphaltic batch plants, including weekends, holidays and hours when work is not in progress. Maintain excavations, stockpiles, haul roads, permanent and temporary access roads, plant sites, spoil areas, borrow areas, and other work areas within or outside the project boundaries free from particulates which would cause the Federal, State, and local air pollution standards to be exceeded or which would cause a hazard or a nuisance. Sprinkling, chemical treatment of an approved type, baghouse, scrubbers, electrostatic precipitators or other methods are permitted to control particulates in the work area. Sprinkling, to be efficient, must be repeated to keep the disturbed area damp at all times. Provide sufficient, competent equipment available to accomplish these tasks. Perform particulate control as the work proceeds and whenever a particulate nuisance or hazard occurs. Comply with all State and local visibility regulations.

3.3.2. Odors

Control odors from construction activities at all times. Odors shall not cause a health hazard and shall be in compliance with State regulations and/or local ordinances.

3.3.3. Sound Intrusions

Keep construction activities under surveillance and control to minimize environment damage by noise. Comply with the provisions of the state and Installation rules.

3.3.4. Burning

Burning is not allowed on the project site unless specified in other sections of the specifications or by written authorization. Specific times, locations, and manners of burning shall be subject to approval.

3.4. CHEMICAL MATERIALS MANAGEMENT AND WASTE DISPOSAL

Disposal of wastes shall be as directed below, unless otherwise specified in other sections and/or shown on the drawings.

3.4.1. Solid Wastes

Place solid wastes (excluding clearing debris) in containers which are emptied on a regular schedule. Conduct handling, storage, and disposal to prevent contamination. Employ segregation measures so that no hazardous or toxic waste will become co-mingled with solid waste. Transport solid waste off Government property and dispose of it in compliance with Federal, State, and local requirements for solid waste disposal. The minimum acceptable off-site solid waste disposal option is a Subtitle D RCRA permitted landfill. Verify that the selected transporters and disposal facilities have the necessary permits and licenses to operate. Comply with Federal, State, and local laws and regulations pertaining to the use of landfill areas.

3.4.2. Chemicals and Chemical Wastes

Dispense chemicals, ensuring no spillage to the ground or water. Perform and document periodic inspections of dispensing areas to identify leakage and initiate corrective action. The Government may periodically review this documentation. Collect chemical waste in corrosion resistant, compatible containers. Monitor and remove collection drums to a staging or storage area when contents are within 6 inches of the top. Classify, manage, store, and dispose of wastes in accordance with Federal, State, and local laws and regulations.

3.4.3. Contractor Generated Hazardous Wastes/Excess Hazardous Materials

Hazardous wastes are defined in 40 CFR 261, or are as defined by applicable state and local regulations. Hazardous materials are defined in 49 CFR 171 - 178. At a minimum, manage and store hazardous waste in compliance with 40 CFR 262. Take sufficient measures to prevent spillage of hazardous and toxic materials during dispensing. Segregate hazardous waste from other materials and wastes; protect it from the weather by placing it in a safe covered location and take precautionary measures, such as berming or other appropriate measures, against accidental spillage. Store, describe, package, label, mark, and placard hazardous waste and hazardous material in accordance with 49 CFR 171 - 178, state, and local laws and regulations. Transport Contractor generated hazardous waste off Government property in accordance with the Environmental Protection Agency and the Department of Transportation laws and regulations. Dispose of hazardous waste in compliance with Federal, State and local laws and regulations. Immediately report spills of hazardous or toxic materials to the Government and the Facility Environmental Office. Contractor will be responsible for cleanup and cleanup costs due to spills.

Contractor is responsible for the disposition of Contractor generated hazardous waste and excess hazardous materials.

3.4.4. Fuel and Lubricants

Conduct storage, fueling and lubrication of equipment and motor vehicles in a manner that affords the maximum protection against spill and evaporation. Manage and store fuel, lubricants and oil in accordance with all Federal, State, Regional, and local laws and regulations.

3.5. RECYCLING AND WASTE MINIMIZATION

Participate in State and local government sponsored recycling programs. The Contractor is further encouraged to minimize solid waste generation throughout the duration of the project. Line and berm fueling areas and establish storm water control structures at discharge points for site run-off. Keep a liquid containment clean-up kit available at the fueling area.

3.6. HISTORICAL, ARCHAEOLOGICAL, AND CULTURAL RESOURCES

Existing historical, archaeological, and cultural resources within the Contractor's work area are shown on the drawings. Protect and preserve these resources during the life of the Contract. Temporarily suspend all activities that may damage or alter such resources, if any previously unidentified or unanticipated historical, archaeological, and cultural resources are discovered or found during excavation or other construction activities. Resources covered by this paragraph include but are not limited to: any human skeletal remains or burials; artifacts; shell, midden, bone, charcoal, or other deposits; rock or coral alignments, pavings, wall, or other constructed features; and any indication of agricultural or other human activities. Upon such discovery or find, notify the Government so that the appropriate authorities may be notified and a determination made as to their significance and what, if any, special disposition of the finds should be made. Cease all activities that may result in impact to or the destruction of these resources. Secure the area and prevent employees or other persons from trespassing on, removing, or otherwise disturbing such resources.

3.7. BIOLOGICAL RESOURCES

Minimize interference with, disturbance to, and damage to fish, wildlife, and plants, including their habitat. Protect threatened and endangered animal and plant species including their habitat in accordance with Federal, State, Regional, and local laws and regulations.

3.8. INTEGRATED PEST MANAGEMENT

Coordinate, through the Government, with the Installation Pest Management Coordinator (IPMC) at the earliest possible time prior to pesticide application, in order to minimize impacts to existing fauna and flora. Discuss integrated pest management strategies with the IPMC and receive concurrence from the IPMC, through the COR, prior to the application of any pesticide associated with these specifications. Give IMPC personnel the opportunity to be present at all meetings concerning treatment measures for pest or disease control and during application of the pesticide. The use and management of pesticides are regulated under 40 CFR 152 - 186.

3.8.1. Pesticide Delivery and Storage

Deliver pesticides, approved for use on the Installation, to the site in the original, unopened containers bearing legible labels indicating the EPA registration number and the manufacturer's registered uses.

3.8.2. Qualifications

Use the services of a subcontractor for pesticide application whose principal business is pest control. The subcontractor shall be licensed and certified in the state where the work is to be performed.

3.8.3. Pesticide Handling Requirements

Formulate, treat with, and dispose of pesticides and associated containers in accordance with label directions.

3.8.4. Application

A state certified pesticide applicator shall apply pesticides in accordance with EPA label restrictions and recommendations.

3.9. PREVIOUSLY USED EQUIPMENT

Clean all previously used construction equipment prior to bringing it onto the project site. Ensure that the equipment is free from soil residuals, egg deposits from plant pests, noxious weeds, and plant seeds. Consult with the USDA jurisdictional office for additional cleaning requirements.

3.10. MILITARY MUNITIONS

Immediately stop work in that area and immediately inform the Government, in the event military munitions, as defined in 40 CFR 260, are discovered or uncovered.

3.11. TRAINING OF CONTRACTOR PERSONNEL

Train personnel in all phases of environmental protection and pollution control. Conduct environmental protection/pollution control meetings for all Contractor personnel prior to commencing construction activities. Conduct additional meetings for new personnel and when site conditions change. The training and meeting agenda shall include methods of detecting and avoiding pollution; familiarization with statutory and contractual pollution standards; installation and care of devices, vegetative covers, and instruments required for monitoring purposes to ensure adequate and continuous environmental protection/pollution control; anticipated hazardous or toxic chemicals or wastes, and other regulated contaminants; recognition and protection of archaeological sites, artifacts, wetlands, and endangered species and their habitat that are known to be in the area.

3.12. POST CONSTRUCTION CLEANUP

Clean up all areas used for construction in accordance with Contract Clause: "Cleaning Up". Unless otherwise instructed in writing , obliterate all signs of temporary construction facilities such as haul roads, work area, structures, foundations of temporary structures, stockpiles of excess or waste materials, and other vestiges of construction prior to final acceptance of the work. Grade, fill and seed the entire disturbed area, unless otherwise indicated.

SECTION 01 62 35
RECYCLED/RECOVERED MATERIAL

1.0 GENERAL

1.1. REFERENCES

1.2. OBJECTIVES

1.3. EPA DESIGNATED ITEMS INCORPORATED IN THE WORK

1.4. EPA PROPOSED ITEMS INCORPORATED IN THE WORK

1.5. EPA LISTED ITEMS USED IN CONDUCT OF THE WORK BUT NOT INCORPORATED IN THE WORK

1.0 GENERAL

1.1. REFERENCES

The publications listed below form a part of this specification to the extent referenced. The publications are referred to within the text by the basic designation only.

- U.S. NATIONAL ARCHIVES AND RECORDS ADMINISTRATION (NARA)
- 40 CFR 247 Comprehensive Procurement Guideline for Products Containing Recovered Materials

1.2. OBJECTIVES

Government procurement policy is to acquire, in a cost effective manner, items containing the highest percentage of recycled and recovered materials practicable consistent with maintaining a satisfactory level of competition without adversely affecting performance requirements or exposing suppliers' employees to undue hazards from the recovered materials. The Environmental Protection Agency (EPA) has designated certain items which must contain a specified percent range of recovered or recycled materials. The Contractor shall make all reasonable efforts to use recycled and recovered materials in providing the EPA designated products and in otherwise utilizing recycled and recovered materials in the execution of the work.

1.3. EPA DESIGNATED ITEMS INCORPORATED IN THE WORK

Materials that have been designated by EPA as being products which are or can be made with recovered or recycled materials, when incorporated into the work under this contract, shall contain at least the minimum percentage of recycled or recovered materials indicated by EPA unless adequate justification (non-availability) for non-use is provided. When a designated item is specified as an option to a non-designated item, the designated item requirements apply only if the designated item is used in the work.

1.4. EPA PROPOSED ITEMS INCORPORATED IN THE WORK

Products other than those designated by EPA are still being researched and are being considered for future Comprehensive Procurement Guideline (CPG) designation. It is recommended that these items, when incorporated in the work under this contract, contain the highest practicable percentage of recycled or recovered materials, provided specified requirements are also met.

1.5. EPA LISTED ITEMS USED IN CONDUCT OF THE WORK BUT NOT INCORPORATED IN THE WORK

There are many products listed in 40 CFR 247 which have been designated or proposed by EPA to include recycled or recovered materials that may be use by the Contractor in performing the work but will not be incorporated into the work. These products include office products, temporary traffic control products, and pallets. It is recommended that these non-construction products, when used in the conduct of the work, contain the highest practicable percentage of recycled or recovered materials and that these products be recycled when no longer needed.

End of Section 01 62 35

SECTION 01 78 02.00 10
CLOSEOUT SUBMITTALS

1.0 OVERVIEW

1.1. SUBMITTALS

1.2. PROJECT RECORD DOCUMENTS

1.3. EQUIPMENT DATA

1.4. CONSTRUCTION WARRANTY MANAGEMENT

1.5. MECHANICAL TESTING, ADJUSTING, BALANCING, AND COMMISSIONING

1.6. OPERATION AND MAINTENANCE MANUALS

1.7. FIELD TRAINING

1.8. PRICING OF CONTRACTOR-FURNISHED AND INSTALLED PROPERTY AND GOVERNMENT-FURNISHED CONTRACTOR-INSTALLED PROPERTY

1.9. LEED REVIEW MEETINGS

1.10. RED ZONE MEETING

1.11. FINAL CLEANING

1.12. INTERIM FORM DD1354 "TRANSFER AND ACCEPTANCE OF MILITARY REAL PROPERTY

EXHIBIT 1 SAMPLE RED ZONE MEETING CHECKLIST

1.0 OVERVIEW

1.1. SUBMITTALS

Government approval is required for any submittals with a "G" designation; submittals not having a "G" designation are for Designer of Record approval or for information only. Submit the following in accordance with Section 01 33 00 submittals*:*

SD-02 Shop Drawings

– As-Built Drawings - G

▪ Drawings showing final as-built conditions of the project. Provide electronic drawing files as specified in Section 01 33 16, 3 sets of blue-line prints , one set of reproducible mylar drawings and one set of the approved working as-built drawings.

SD-03 Product Data

– As-Built Record of Equipment and Materials

▪ Two copies of the record listing the as-built materials and equipment incorporated into the construction of the project.

– Construction Warranty Management Plan

▪ Three sets of the construction warranty management plan containing information relevant to the warranty of materials and equipment incorporated into the construction project, including the starting date of warranty of construction. Furnish with each warranty the name, address, and telephone number of each of the guarantor's representatives nearest to the project location.

– Warranty Tags

▪ Two record copies of the warranty tags showing the layout and design.

– Final Cleaning

▪ Two copies of the listing of completed final clean-up items.

1.2. PROJECT RECORD DOCUMENTS

1.2.1. As-Built Drawings – G

An as-built drawing is a construction drawing revised to reflect the final as-built conditions of the project as a result of modifications and corrections to the project design required during construction. The final as-built drawings shall not have the appearance of marked up drawings, but that of professionally prepared drawings as if they were the "as designed" drawings.

1.2.2. Maintenance of As-Built Drawings

1.2.2.1. The Configuration Management Plan shall describe how the Contractor will maintain up-to-date drawings, how it will control and designate revisions to the drawings and specifications (In accordance with Special Contract Requirement: ***Deviating from the Accepted Design*** and Section 01 33 16: ***Design after Award***, the Designer of Record's approval is necessary for any revisions to the accepted design).

1.2.2.2. Make timely updates, carefully maintaining a record set of working as-built drawings at the job site, marked in red, of all changes and corrections from the construction drawings. Enter changes and corrections on drawings promptly to reflect "Current Construction". Perform this update no less frequently

than weekly for the blue line drawings and update no less frequently than quarterly for the CADD/CAD and BIM files, which were prepared previously in accordance with Section 01 33 16. Include a confirmation that the as-builts are up to date with the submission of the monthly project schedule.

1.2.2.3. If the DB Contractor fails to maintain the as-built drawings as required herein, the Government will retain from the monthly progress payment, an amount representing the estimated monthly cost of maintaining the as-built drawings. Final payment with respect to separately priced facilities or the contract as a whole will be withheld until the Contractor submits acceptable as-built drawings and the Government approves them.

1.2.2.4. The marked-up set of drawings shall reflect any changes, alterations, adjustments or modifications. Changes must be reflected on all sheets affected by the change. Changes shall include marking the drawings to reflect structural details, foundation layouts, equipment sizes, and other extensions of design.

1.2.2.5. Typically, room numbers shown on the drawings are selected for design convenience and do not represent the actual numbers intended for use by the end user. Final as-built drawings shall reflect actual room numbers adopted by the end user.

1.2.2.6. If there is no separate contract line item (CLIN) for as-built drawings, the Government will withhold the amount of $35,000, or 1% of the present construction value, whichever is the greater, until the final as-built drawing submittal has been approved by the Government.

1.2.3. Underground Utilities

The drawings shall indicate, in addition to all changes and corrections, the actual location, kinds and sizes of all sub-surface utility lines. In order that the location of these lines and appurtenances may be determined in the event the surface openings or indicators become covered over or obscured, the as-built drawings shall show, by offset dimensions to two permanently fixed surface features, the end of each run including each change in direction. Locate Valves, splice boxes and similar appurtenances by dimensioning along the utility run from a reference point. Record average elevation of the top of each run or underground structure..

1.2.4. Partial Occupancy

For projects where portions of construction are to be occupied or activated before overall project completion, including portions of utility systems, supply as-built drawings for those portions of the facility being occupied or activated at the time the facility is occupied or activated. Show this same as-built information previously furnished on the final set of as-built drawings.

1.2.5. As-Built Conditions That are Different From the construction Drawings

Accurately reflect all as-built conditions that are different, such as dimensions, road alignments and grades, and drainage and elevations, from the construction drawings on each drawing. If the as-built condition is accurately reflected on a shop drawing, then furnish that shop drawing in CADD format. Reference the final as-built construction drawing the shop drawing file that includes the as-built information. In turn, the shop drawing shall reference the applicable construction as-built drawing. Delete any options shown on drawings and not selected clearly reflect options selected on final as-built drawings.

1.2.6. Additional As-Built Information that Exceeds the Detail Shown on the construction Drawings:

These as-built conditions include those that reflect structural details, foundation layouts, equipment, sizes, mechanical and electrical room layouts and other extensions of design, that were not shown in the project design documents because the exact details were not known until after the time of approved shop

drawings. It is recognized that these shop drawing submittals (revised showing as-built conditions) will serve as the as-built record without actual incorporation into the construction drawings, piping, and equipment drawings. Include locations of all explorations, logs of all explorations, and results of all laboratory testing, including those provided by the Government. Furnish all such shop drawings in CADD /CADformat. Include fire protection details, such as wiring, performed for the design of the project.

1.2.7. Final As-Built Drawings

Submit final as-built CADD/CAD and BIM Model(s) and Facility Data files at the time of Beneficial Occupancy of the project or at a designated phase of the project. In the event the Contractor accomplishes additional work after this submittal, which changes the as-built conditions, submit a new DVD with all drawing sheets , one copy of affected Mylars and three blue-line copies of affected sheets which depict additional changes.

1.2.8. Title Blocks

In accordance with the configuration management plan, clearly mark title blocks to indicate final as-built drawings.

1.2.9. Other As-Built Documents

Provide scans of all other documents such as design analysis, catalog cuts, certification documents that are not available in native electronic format in an organized manner in Adobe.pdf format.

1.2.9.1. LEED Documentation

Update LEED documentation on at least a monthly basis and have it available for review by the Government on the jobsite at all times during construction. Submit the final LEED Project Checklist(s), final LEED submittals checklist and complete project documentation, verifying the final LEED score and establishing the final rating. Provide full support to the validation review process, including credit audits. See also the LEED documentation requirements in Section 01 33 16, DESIGN AFTER AWARD.

1.2.9.2. GIS Documentation

Provide final geo-referenced GIS database of the new building footprint along with any changes made to exterior of the building. The intent of capturing the final building footprint and exterior modifications in a GIS database is to provide the installation with a data set of the comprehensive changes made to the landscape as a result of the construction project. The Government will incorporate this data set into the installations existing GIS MasterPlan or Enterprise GIS system. The GIS database deliverable shall follow a standard template provided to the Contractor by the Government, adhere to detailed specifications outlined in ECB No 2006-15, and be documented using the Federal Geographic Data Committee (FGDC) metadata standard.

1.3. EQUIPMENT DATA

1.3.1. Real Property Equipment

Provide an Equipment-in-Place list of all installed equipment furnished under this contract. Include all information usually listed on manufacturer's name plate. Include the cost of each piece of installed property F.O.B. construction site. For each of the items which is specified herein to be guaranteed for a specified period from the date of acceptance thereof, provide the following information: The name, serial and model number address of equipment supplier, or manufacturer originating the guaranteed item. The Contractor's guarantee to the Government of these items will not be limited by the terms of any manufacturer's guarantee to the Contractor. Furnish the list as one (1) reproducible and three (3) copies

thirty (30) calendar days before completion of any segment of the contract work which has an incremental completion date.

1.3.2. Maintenance and Parts Data

Furnish a brochure, catalog cut, parts list, manufacturer's data sheet or other publication showing detailed parts data on all other equipment subject to repair and maintenance procedures not otherwise required in Operations and Maintenance Manuals specified elsewhere in this contract. Distribution of directives shall follow the same requirements as listed in paragraph above.

1.3.3. Construction Specifications

Furnish permanent electronic files of final as-built construction specifications, including modifications thereto, with the as-built drawings.

1.4. CONSTRUCTION WARRANTY MANAGEMENT

1.4.1. Prior to the end of the one year warranty, the Government may conduct an infrared roof survey on any project involving a membrane roofing system. This survey will be conducted in accordance with ASTM C1153-90, "Standard Practice for Location of Wet Insulation in Roofing Systems Using Infrared Imaging". The Contractor shall replace all damaged materials and locate and repair sources of moisture penetration.

1.4.2. Management

1.4.2.1. Warranty Management Plan

Develop a warranty management plan containing information relevant to the clause ***Warranty of Construction*** in FAR 52.246-21. Submit the warranty management plan for Government approval at least 30 days before the planned pre-warranty conference. In the event of phased turn-over of the contract, update the Warranty Management Plan as necessary to include latest information required. Include all required actions and documents to assure that the Government receives all warranties to which it is entitled. The plan shall be in narrative form and contain sufficient detail to render it suitable for use by future maintenance and repair personnel, whether tradesmen, or of engineering background, not necessarily familiar with this contract. The term "status" as indicated below shall include due date and whether item has been submitted or was accomplished. Submit warranty information made available during the construction phase prior to each monthly pay estimate. Assemble information in a binder and turn over to the Government upon acceptance of the work. The construction warranty period shall begin on the date of project acceptance and shall continue for the full product warranty period. The Contractor, Government, including the Customer Representative shall jointly conduct warranty inspections, 4 months and 9 months, after acceptance. The warranty management plan shall include, but shall not be limited to, the following information:

(1) Roles and responsibilities of all personnel associated with the warranty process, including points of contact and telephone numbers within the organizations of the contractors, subcontractors, manufacturers or suppliers involved.

(2) Listing and status of delivery of all Certificates of Warranty for extended warranty items, to include roofs, HVAC balancing, pumps, motors, transformers, and for all commissioned systems such as fire protection and alarm systems, sprinkler systems, lightning protection systems, etc.

(3) A list for each warranted equipment, item, feature of construction or system indicating:

(i) Name of item.

(ii) Model and serial numbers.

(iii) Location where installed.

(iv) Name and phone numbers of manufacturers or suppliers.

(v) Names, addresses and telephone numbers of sources of spare parts.

(vi) Warranties and terms of warranty. Include one-year overall warranty of construction. Indicate those items, which have extended warranties with separate warranty expiration dates.

(vii) Cross-reference to warranty certificates as applicable.

(viii) Starting point and duration of warranty period.

(ix) Summary of maintenance procedures required to continue the warranty in force.

(x) Cross-reference to specific pertinent Operation and Maintenance manuals.

(xi) Organization, names and phone numbers of persons to call for warranty service.

(xii) Typical response time and repair time expected for various warranted equipment.

(4) The Contractor's plans for attendance at the 4 and 9 month post-construction warranty inspections conducted by the Government.

(5) Procedure and status of tagging of all equipment covered by extended warranties.

(6) Copies of instructions to be posted near selected pieces of equipment where operation is critical for warranty and/or safety reasons.

1.4.3. Performance Bond

1.4.3.1. The Contractor's Performance Bond will remain effective throughout the construction warranty period.

1.4.3.2. In the event the Contractor or his designated representative(s) fails to commence and diligently pursue any work required under this clause, and in a manner pursuant to the requirements thereof, the Government shall have a right to demand that said work be performed under the Performance Bond by making written notice on the surety. If the surety fails or refuses to perform the obligation it assumed under the Performance Bond, the Government shall have the work performed by others, and after completion of the work, may make demand for reimbursement of any or all expenses incurred by the Government while performing the work, including, but not limited to administrative expenses.

1.4.3.3. In the event sufficient funds are not available to cover the construction warranty work performed by the Government at the Contractor's expense, the Government will have the right to recoup expenses from the bonding company.

1.4.3.4. Following oral or written notification of required warranty repair work, the Contractor will respond as dictated by para. 1.4.5. Written verification will follow oral instructions. Failure of the Contractor to respond will be cause for the Government to proceed against the Contractor as outlined in the paragraph 1.4.5.5 and/or above.

1.4.4. Pre-Warranty Conference

Prior to contract completion, or completion of any phase or portion of contract to be turned over, and at a time designated by the Contracting Officer, the Contractor shall meet with the Government to develop a mutual understanding with respect to the requirements of this clause. Communication procedures for Contractor notification of warranty defects, priorities with respect to the type of defect, reasonable time required for Contractor response, and other details deemed necessary by the Government for the execution of the construction warranty shall be established/reviewed at this meeting. In connection with these requirements and at the time of the Contractor's quality control completion inspection, the Contractor will furnish the name, telephone number and address of a licensed and bonded company which is authorized to initiate and pursue warranty work action on behalf of the Contractor. This point of contact will be located within the local service area of the warrantied construction, will be continuously

available, and will be responsive to Government inquiry on warranty work action and status. This requirement does not relieve the Contractor of any of his responsibilities in connection with other portions of this provision.

1.4.5. Contractor's Response to Warranty Service Requirements.

Following Government oral or written notification, which may include authorized installation maintenance personnel, the Contractor shall respond to warranty service requirements in accordance with the "Warranty Service Priority List" and the three categories of priorities listed below. Submit a report on any warranty item that has been repaired during the warranty period. The report shall include the cause of the problem, date reported, corrective action taken, and when the repair was completed. If the Contractor does not perform the construction warranty within the timeframe specified, the Government will perform the work and backcharge the construction warranty payment item established.

1.4.5.1. First Priority Code 1 Perform onsite inspection to evaluate situation, and determine course of action within 4 hours, initiate work within 6 hours and work continuously to completion or relief.

1.4.5.2. Second Priority Code 2 Perform onsite inspection to evaluate situation, and determine course of action within 8 hours, initiate work within 24 hours and work continuously to completion or relief.

1.4.5.3. Third Priority Code 3 All other work to be initiated within 3 work days and work continuously to completion or relief.

1.4.5.4. The "Warranty Service Priority List" is as follows:

- Code 1 - Air Conditioning System

(a) Buildings with computer equipment.

(b) Barracks, mess halls (entire building down).

- Code 2 - Air Conditioning Systems

(a) Recreational support.

(b) Air conditioning leak in part of building, if causing damage.

(c) Air conditioning system not cooling properly

(d) Admin buildings with Automated Data Processing (ADP) equipment not on priority list.

- Code 1 - Doors

(a) Overhead doors not operational.

- Code 1 - Electrical

(a) Power failure (entire area or any building operational after 1600 hours).

(b) Traffic control devices.

(c) Security lights.

(d) Smoke detectors and fire alarm systems

(e) Power or lighting failure to an area, facility, portion of a facility, which may adversely impact health, safety, security, or the installation's mission requirement, or which may result in damage to property.

- Code 2 - Electrical

(a) Power failure (no power) for unoccupied buildings or portions thereof or branch circuits within occupied buildings, not listed as Code 1.

(a) Receptacle and lights, not listed as code 1.

- Code 3 - Electrical

(a) Street, parking area lights

- Code 1 - Gas

(a) Leaks and breaks.

(b) No gas to cantonment area.

- Code 1 - Heat

(a) Area power failure affecting heat.

(b) Heater in unit not working.

- Code 2 Heat

(a) All heating system failures not listed as Code 1.

- Code 3 - Interior

(a) Floor damage

(b) Paint chipping or peeling

- Code 1 - Intrusion Detection Systems - N/A.
- Code 2 - Intrusion Detection Systems other than those listed under Code 1
- Code 1 - Kitchen Equipment

(a) Dishwasher.

(b) All other equipment hampering preparation of a meal.

- Code 2 - Kitchen Equipment

(a) All other equipment not listed under Code 1.

- Code 2 - Plumbing

(a) Flush valves not operating properly

(b) Fixture drain, supply line commode, or water pipe leaking.

(c) Commode leaking at base.

- Code 3 - Plumbing

(a) Leaking faucets

- Code 1 - Refrigeration

(a) Mess Hall.

(b) Medical storage.

- Code 2 - Refrigeration

(a) Mess hall - other than walk-in refrigerators and freezers.

- Code 1 - Roof Leaks

(a) Temporary repairs will be made where major damage to property is occurring.

- Code 2 - Roof Leaks

(a) Where major damage to property is not occurring, check for location of leak during rain and complete repairs on a Code 2 basis.

- Code 1 - Sprinkler System

(a) All sprinkler systems, valves, manholes, deluge systems, and air systems to sprinklers.

- Code 1 - Tank Wash Racks (Bird Baths)

(a) All systems which prevent tank wash.

- Code 1 - Water (Exterior)

(a) Normal operation of water pump station.

- Code 2 - Water (Exterior)

(a) No water to facility.

- Code 1 - Water, Hot (and Steam)

(a) Barracks (entire building).

- Code 2 - Water, Hot

(a) No hot water in portion of building listed under Code 1

1.4.5.5. Should parts be required to complete the work and the parts are not immediately available, the Contractor shall have a maximum of 12 hours after arrival at the job site to provide the Government, with firm written proposals for emergency alternatives and temporary repairs for Government participation with the Contractor to provide emergency relief until the required parts are available on site for the Contractor to perform permanent warranty repair. The Contractors proposals shall include a firm date and time that the required parts shall be available on site to complete the permanent warranty repair. The Government will evaluate the proposed alternatives and negotiate the alternative considered to be in the best interest of the Government to reduce the impact of the emergency condition. Alternatives considered by the Government will include the alternative for the Contractor to "Do Nothing" while waiting until the required parts are available to perform permanent warranty repair. Negotiating a proposal which will require Government participation and the expenditure of Government funds shall constitute a separate procurement action by the using service.

1.4.6. Equipment Warranty Identification Tags

1.4.6.1. Provide warranty identification tags at the time of installation and prior to substantial completion shall provide warranty identification tags on all Contractor and Government furnished equipment which the Contractor has installed.

(a) The tags shall be suitable for interior and exterior locations, resistant to solvents, abrasion, and to fading caused by sunlight, precipitation, etc. These tags shall have a permanent pressure-sensitive adhesive back, and they shall be installed in a position that is easily (or most easily) noticeable. Tag each component of contractor furnished equipment that has differing warranties on its components.

(b) Submit sample tags, representing how the other tags will look, for Government review and approval.

(c) Tags for Warrantied Equipment: The tag for this equipment shall be similar to the following: Exact format and size will be as approved.

EQUIPMENT WARRANTY - CONTRACTOR FURNISHED EQUIPMENT

MFG NAME MODEL NO.

SERIAL NO.

CONTRACT NO.

CONTRACTOR NAME

CONTRACTOR WARRANTY EXPIRES

MFG WARRANTY(IES) EXPIRE

EQUIPMENT WARRANTY - GOVERNMENT FURNISHED EQUIPMENT

MFG NAME MODEL NO.

SERIAL NO.

CONTRACT NO.

DATE EQUIP PLACED IN SERVICE

MFG WARRANTY(IES) EXPIRE

(d) If the manufacturer's name (MFG), model number and serial number are on the manufacturer's equipment data plate and this data plate is easily found and fully legible, this information need not be duplicated on the equipment warranty tag

1.4.6.2. Execution: Complete the required information on each tag and install these tags on the equipment by the time of and as a condition of final acceptance of the equipment.

1.5. MECHANICAL TESTING, ADJUSTING, BALANCING, AND COMMISSIONING

Submit; all reports, statements, certificates, and completed checklists for testing, adjusting, balancing, and commissioning of mechanical systems prior to final inspection and transfer of the completed facility for approval, as specified in applicable technical specification sections.

1.6. OPERATION AND MAINTENANCE MANUALS

1.6.1. General Requirements

1.6.1.1. Inasmuch as the operations and maintenance manuals are required to operate and maintain the facility, the operations and maintenance (O&M) manuals will be considered a requirement prior to substantial completion of any facility to be turned over to the Government. Beneficial occupancy of all or portions of a facility prior to substantial completion will not relieve the Contractor of liquidated damages, if substantial completion exceeds the required completion date.

1.6.1.2. Provide one permanent electronic copy on CD-ROM and 2 hard copies of the Equipment Operating, Maintenance, and Repair Manuals. Provide separate manuals for each utility system as defined hereinafter. Submit Operations and Maintenance manuals for approval before field training or 90 days before substantial completion (whichever occurs earlier). If there is no separate CLIN for O&M Manuals, the Government will withhold an amount representing $20,000, as non-progressed work, until submittal and approval of all O&M manuals are complete.

1.6.2. Definitions

1.6.2.1. Equipment

A single piece of equipment operating alone or in conjunction with other equipment to accomplish a system function.

1.6.2.2. System

A combination of one or more pieces of equipment which function together to accomplish an intended purpose (i.e. HVAC system is composed of many individual pieces of equipment such as fans, motors, compressors, valves, sensors, relays, etc.)

1.6.3. Hard Cover Binders

The manuals shall be hard cover with posts, or 3-ring binders, so sheets may be easily substituted. Print the following identification on the cover: the words "EQUIPMENT OPERATING, MAINTENANCE, AND REPAIR MANUALS," the project name, building number, and an indication of utility or systems covered, the name of the Contractor, and the Contract number. Manuals shall be approximately 8-1/2 by 11-inches with large sheets folded in and capable of being easily pulled out for reference. All manuals for the project must be similar in appearance, and be of professional quality.

1.6.4. Warning Page

Provide a warning page to warn of potential dangers (if they exist, such as high voltage, toxic chemicals, flammable liquids, explosive materials, carcinogens, high pressures, etc.). Place the warning page inside the front cover and in front of the title page. Include any necessary Material Safety Data Sheets (MDSD) here.

1.6.5. Title Page

The title page shall include the same information shown on the cover and show the name of the preparing firm and the date of publication.

1.6.6. Table of Contents

Each volume of the set of manuals for this project shall include a table of contents, for the entire set, broken down by volume.

1.6.7. GENERAL

Organize manuals according to the following format, and include information for each item of equipment Submit a draft outline and table of contents for approval at 50% contract completion.

TABLE OF CONTENTS

PART I: Introduction

- Equipment Description
- Functional Description
- Installation Description

PART II: Operating Principles

PART III: Safety

PART IV: Preventive Maintenance

- Preventive Maintenance Checklist, Lubrication
- Charts and Diagrams

PART V: Spare Parts Lists

- Troubleshooting Guide
- Adjustments
- Common Repairs and Parts Replacement

PART VI: Illustrations

1.6.7.1. Part I-Introduction

Part I shall provide an introduction, equipment or system description, functional description and theory of operation, and installation instructions for each piece of equipment. Include complete instructions for uncrating, assembly, connection to the power source and pre-operating lubrication in the installation instructions as applicable. Illustrations, including wiring and cabling diagrams, are required as appropriate in this section. Include halftone pictures of the equipment in the introduction and equipment description, as well as system layout drawings with each item of equipment located and marked. Do not use copies of previously submitted shop drawings in these manuals.

1.6.7.2. Part II-Operating Principles

Part II shall provide complete instructions for operating the system, and each piece of equipment. Illustrations, halftone pictures, tables, charts, procedures, and diagrams are required when applicable. This will include step-by-step procedures for start-up and shutdown of both the system and each component piece of equipments, as well as adjustments required to obtain optimum equipment performance, and corrective actions for malfunctions. Show performance sheets and graphs showing capacity data, efficiencies, electrical characteristics, pressure drops, and flow rates here, also. Marked-up catalogs or catalog pages do not satisfy this requirement. Present performance information as concisely as possible with only data pertaining to equipment actually installed. Include actual test data collected for Contractor performance here.

1.6.7.3. Part III-Safety

Part III shall contain the general and specific safety requirements peculiar to each item of equipment. Repeat safety information as notes cautions and warnings in other sections where appropriate to operations described.

1.6.7.4. Part IV-Preventive Maintenance

Part IV shall contain a troubleshooting guide, including detailed instructions for all common adjustments and alignment procedures, including a detailed maintenance schedule. Also include a diagnostic chart showing symptoms and solutions to problems. Include test hookups to determine the cause, special tools and test equipment, and methods for returning the equipment to operating conditions. Information may be in chart form or in tabular format with appropriate headings. Include instructions for the removal, disassembly, repair, reassembly, and replacement of parts and assemblies where applicable and the task is not obvious.

1.6.7.5. Part V-Spare Parts List

Part V shall contain a tabulation of description data and parts location illustrations for all mechanical and electrical parts. The heading of the parts list shall clearly identify the supplier, purchase order number, and equipment. Include the unit price for each part. List parts by major assemblies, and arrange the listing in columnar form. Include names and addresses of the nearest manufacturer's representatives, as well as any special warranty information. Provide a list of spare parts that are recommended to be kept in stock by the Government installation.

1.6.7.6. Part VI-Illustrations

Part VI shall contain assembly drawings for the complete equipment or system and for all major components. Include complete wiring diagrams and schematics. Other illustrations, such as exploded views, block diagrams, and cutaway drawings, are required as appropriate.

1.6.8. Framed Instructions

Post framed instructions are required for substantial completion. Post framed instructions under glass or in laminated plastic, including wiring and control diagrams showing the complete layout of the entire system, including equipment, ductwork, piping valves, dampers, and control sequence at a location near the equipment described. Prepare condensed operating instructions explaining preventive maintenance procedures methods of checking the system for normal safe operation, valve schedule and procedures for safely starting and stopping the system in type form, framed as specified above for the wiring and control diagrams and posted beside the diagrams. Submit proposed diagrams, instructions, and other sheets prior to posting. Post the framed instructions before field training.

1.6.9. (Reserved. See 1.7 for Field Training)

1.6.10. System/Equipment Requirements

1.6.10.1. Facility Heating System

Provide information on the following equipment: boilers, water treatment, chemical feed pumps and tanks, converters, heat exchangers, pumps, unit heaters, fin-tube radiation, air handling units (both heating only and heating and cooling), and valves (associated with heating systems).

1.6.10.2. Air-Conditioning Systems

Provide information in chillers, packaged air-conditioning equipment, towers, water treatment, chemical feed pumps and tanks, air-cooled condensers, pumps, compressors, air handling units, and valves (associated with air-conditioning systems).

1.6.10.3. Temperature Control and HVAC Distribution Systems

Provide all information described for the following equipment: valves, fans, air handling units, pumps, boilers, converters and heat exchangers, chillers, water cooled condensers, cooling towers, and fin-tube radiation, control air compressors, control components (sensors, controllers, adapters and actuators), and flow measuring equipment.

1.6.10.4. Central Heating Plants

Provide the information described for the following equipment: boilers, converters, heat exchangers, pumps, fans, steam traps, pollution control equipment, chemical feed equipment, control systems, fuel handling equipment, de-aerators, tanks (flash, expansion, return waters, etc.), water softeners, and valves.

1.6.10.5. Heating Distribution Systems

Provide the information described for the following equipment: valves, fans, pumps, converters and heat exchangers, steam traps, tanks (expansion, flash, etc.), and piping systems.

1.6.10.6. Exterior Electrical Systems

Provide information on the following equipment: power transformers, relays, reclosers, breakers, and capacitor bank controls.

1.6.10.7. Interior Electrical Systems

Provide information on the following equipment: relays, motor control centers, switchgear, solid state circuit breakers, motor controller, EPS lighting systems, wiring diagrams and troubleshooting flow chart on control systems, and special grounding systems.

1.6.10.8. Energy Monitoring and Control Systems

The maintenance manual shall include descriptions of maintenance for all equipment, including inspection, periodic preventative maintenance, fault diagnosis, and repair or replacement of defective components.

1.6.10.9. Domestic Water Systems

Provide the identified information on the following equipment: tanks, unit process equipment, pumps, motors, control and monitoring instrumentation, laboratory test equipment, chemical feeders, valves, switching gear, and automatic controls.

1.6.10.10. Wastewater Treatment Systems

Provide the identified information on the following equipment: tanks, unit process equipment, pumps, motors, control and monitoring instrumentations, laboratory test equipment chemical feeders, valves, scrapers, skimmers, comminutors, blowers, switching gear, and automatic controls.

1.6.10.11. Fire Protection Systems

Provide information on the following equipment: alarm valves, manual valves, regulators, foam and gas storage tanks, piping materials, sprinkler heads, nozzles, pumps, and pump drivers.

1.6.10.12. Fire Alarm and Detection Systems

(1) The maintenance manual shall include description of maintenance for all equipment, including inspection, periodic preventive maintenance, fault diagnosis, and repair or replacement of defective components.

(2) Provide all software; database with complete identification of programmable portions of system equipment and devices, and all other system programming data on all modes of the system; connecting cables; and proprietary equipment necessary for the operation, maintenance, testing, repair and programming, etc. of the system and that may be required for implementation of future changes to the fire system (additional and/or relocated initiating devices, notification devices, etc.

(3) Provide all system and equipment technical data and computer software with the requisite rights to Government use, in accordance with the applicable contract clauses.

(4) Training shall include software and programming required for the effective operation, maintenance, testing, diagnostics and expansion of the system.

1.6.10.13. Plumbing Systems

Provide information on the following equipment: water heaters, valves, pressure regulators backflow preventors, piping materials, and plumbing fixtures.

1.6.10.14. Liquid Fuels Systems

Provide information on the following equipment: tanks, automatic valves manual valves, filter separators, pumps, mechanical loading arms, nozzles, meters, electronic controls, electrical switch gear, and fluidic controls.

1.6.10.15. Cathodic Protection Systems

Provide information on the following material and equipment: rectifiers, meters, anodes, anode backfill, anode lead wire, insulation material and wire size, automatic controls (if any), rheostats, switches, fuses and circuit breakers, type and size of rectifying elements, type of oil in oil-immersed rectifiers, and rating of shunts.

1.6.10.16. Generator Installations

Provide information on the following equipment: generator sets, automatic transfer panels, governors, exciters, regulators starting systems, switchgear, and protective devices.

1.6.10.17. Miscellaneous Systems

Provide information on the following: communication and ADP systems, security and intrusion alarm, elevators, material handling, active solar, photovoltaic, nurse call, paging, intercom, closed circuit TV, irrigation, sound and material delivery systems, kitchen, refrigeration, disposal, ice making equipment, and other similar type special systems not otherwise specified.

1.6.10.18. Laboratory, Environmental and Pollution Control Systems

Provide information on the following equipment: wet scrubbers, quench chambers, scrub tanks, liquid oil separators, and fume hoods.

1.7. FIELD TRAINING

Field Training is a requirement for substantial completion. Conduct a training course for the operating staff for each particular system. Conduct the training is to be conducted during hours of normal working time after the system is functionally complete. The field instructions shall cover all of the items contained in the Equipment Operating, Maintenance and Repair Manuals. The training will include both classroom and "hands-on" training. Submit a lesson plan outlining the information to be discussed during training periods. Submit this lesson plan for approval 90 days before contract completion before the field training occurs. Record training on DVD and furnish to the Government within ten (10) days following training. Document all training and furnish a list of all attendees.

1.8. PRICING OF CONTRACTOR-FURNISHED AND INSTALLED PROPERTY AND GOVERNMENT-FURNISHED CONTRACTOR-INSTALLED PROPERTY

Promptly furnish and require any sub-contractor or supplier to furnish, in like manner, unit prices and descriptive data required by the Government for Property Record purposes of fixtures and equipment furnished and/or installed by the Contractor or sub-contractor, except prices do not need to be provided for Government-Furnished Property.

1.9. LEED REVIEW MEETINGS

1.9.1. Pre-Closeout Meeting. Approximately 30 days before submittal of LEED closeout documentation, the Contractor and the Government's project delivery team (including Installation representative) will meet to review the documentation, determine which, if any, credits will be audited and identify any corrections/missing items prior to the closeout LEED documentation submittal.

1.9.2. Approximately 14 days after submittal of LEED closeout documentation, the Contractor and the Government's project delivery team (including Installation representative) will meet to review the LEED closeout documentation. The review conference will include discussion of and resolution of all review comments to ensure consensus on achievement of credits and satisfactory documentation. At the review conference a final score will be determined and endorsed in writing by all parties.

1.10. RED ZONE MEETING

At approximately 80% of contract completion or 60 days before the anticipated Beneficial Occupancy Date (BOD), whichever occurs first, the Contractor and the Government's project delivery team will conduct what is known as the Red Zone Meeting to discuss the close-out process, to schedule the events and review responsibilities for actions necessary to produce a timely physical, as well as fiscal, project close-out. The Red Zone meeting derives its name from the football term used to describe the team effort to move the ball the last 20 yards into the end zone. The close-out of a construction project sometimes can be equally as hard and most definitely requires the whole team’s efforts. The ACO will chair the meeting. If not already provided, shortly before the meeting, the Contractor shall provide an electronic copy or access to the CADD as-built drawings, completed commensurate with the amount of work completed at the time of the Red Zone Meeting, as an indicator of the Contractors’ understanding of and ability to meet the USACE CADD Standards and to ensure that the Contractor is making progress with CADD As-Built requirements. EXHIBIT 1 is a generic meeting checklist.

1.11. FINAL CLEANING

Clean the premises in accordance with FAR clause 52.236-12 and additional requirements stated here. Remove stains, foreign substances, and temporary labels from surfaces. Vacuum carpet and soft surfaces. Clean equipment and fixtures to a sanitary condition. Clean or replace filters of operating equipment if cleaning isn't possible or practicable. Remove debris from roofs, drainage systems, gutters, and downspouts. Sweep paved areas and rake clean landscaped areas. Remove waste, surplus materials, and rubbish from the site. Remove all temporary structures, barricades, project signs, fences and construction facilities. Submit a list of completed clean-up items on the day of final inspection.

1.12. INTERIM FORM DD1354 "TRANSFER AND ACCEPTANCE OF MILITARY REAL PROPERTY

Near the completion of Project, but a minimum of 60 days prior to final acceptance of the work, complete, update draft provided with the final design package(s) (see Section 01 33 16, paragraph 3.7.5) and submit an accounting of all installed property on Interim Form DD1354 "Transfer and Acceptance of Military Real Property." Include any additional assets/improvements/alterations and cost updates from the Draft DD Form 1354. Contact the COR for any project specific information necessary to complete the DD Form 1354. This form will be a topic for the Red Zone Meeting discussed above. For information purposes, a blank DD Form 1354 (fill-able) in ADOBE (PDF) may be obtained at the following web site: http://www.dtic.mil/whs/directives/infomgt/forms/eforms/dd1354.pdf Submit the completed Checklist for Form DD1354 of Government-Furnished and Contractor-Furnished/Contractor Installed items. Attach this list to the updated DD Form 1354. Instructions for completing the form may be obtained through the US Army Corps of Engineers TECHINFO Website at http://www.hnd.usace.army.mil/techinfo/ under publications, in Unified Facilities Criteria UFC 1-300-08.

EXHIBIT 1

SAMPLE

Red Zone Meeting Checklist

Date:_____

Contract No.	
Description / Location	
Contractor	
Contracting Officer	

Action	**Completion Milestone**	√
Inspections		
Fire		
Safety		
Pre-final		
Mechanical Test & Balance		
Commissioning		
Landscaping Complete		
Erosion Control		
Beneficial Occupancy Date (BOD)		
Furniture Installation		
Comm Installation		
As-Built Drawings		
Provide all O&M manuals, tools, shop drawings, spare parts, etc. to customer		
Training of O&M Personnel		
Provide Warranty documents to Customer		
Contract completion		
Final Inspection		

User move-in		
DD Form 1354, Transfer of Real Property completed & signed		
Ribbon cutting		
Payroll Clearances		
DD Form 2626 - Construction Contractor Performance Evaluation		
DD Form 2631 – A-E Performance Rated after Construction		
Status of Pending Mods and REA's/Claims		
Final Payment Completed		
Release of Claims		
Return of Unobligated Funds		
Move Project from CIP to General Ledger		
Financial completion		

End of Section 01 78 02.00 10

APPENDIX A

SITE SUBSURFACE AND GEOTECHNICAL INFORMATION

THIS PAGE INTENTIONALLY LEFT BLANK

PRELIMINARY
SUBSURFACE EXPLORATION
AND
GEOTECHNICAL ENGINEERING REPORT

General Storage Warehouse
L.I. 80087, FY-12
Fort Bragg, North Carolina

By
Soils Section
Geotechnical & HTRW Branch
U.S. Army Engineer District, Savannah

April 2012

This report was prepared by the Savannah District of the U.S. Army Corps of Engineers. The initials or signatures and registration designation of individuals appear on these documents within the scope of their employment as required by the Engineer Regulation 1110-1-8152.

Date: 9 April 2012

Steven M. Bath, P.E.
S. C. Registration No. 13898
Expiration Date: 30 June 2012

Table of Contents

Section **Page**

1. PURPOSE. 1
2. QUALIFICATION OF REPORT. 1
3. PROJECT DESCRIPTION. 1
4. EXPLORATION PROCEDURES. 2
   a. Site Reconnaissance. 2
   b. Field Exploration. 2
5. SITE AND SUBSURFACE CONDITIONS. 3
   a. Site Description. 3
   b. Regional and Site Geology. 3
   c. Subsurface Conditions. 3
   d. Groundwater Conditions. 4
6. ENGINEERING EVALUATIONS AND RECOMMENDATIONS. 4
   a. General. 4
   b. Site Preparation. 5
   c. Foundation Design and Construction. 5
   d. Seismic Design. 5
   e. Concrete Slabs-On-Grade. 5
   f. Pavement Design. 6
   g. Groundwater and Surface-Water Considerations. 6
   h. Structural Fill. 6
   i. Construction Quality Control Testing. 7
   j. Drawings. 8
   k. Specifications. 9
7. FINAL GEOTECHNICAL EVALUATION REPORT. 9

ATTACHMENT A: Soil Test Boring Location Plan
ATTACHMENT B: Soil Test Boring Logs

PRELIMINARY
SUBSURFACE EXPLORATION AND
GEOTECHNICAL ENGINEERING REPORT

General Storage Warehouse
L.I. 80087, FY-12
Fort Bragg, North Carolina

1. PURPOSE.

The Government has conducted a preliminary geotechnical investigation for the proposed project. This report provides a general overview of the site conditions, including subsurface soil and groundwater conditions, and preliminary recommendations are also provided with respect to the geotechnical design and construction of the project.

2. QUALIFICATION OF REPORT.

The field explorations performed for this report were made to determine the subsurface soil and groundwater conditions and were not intended to serve as an assessment of site wetlands, environmental, or contaminant conditions. No effort was made to define, delineate, or designate any areas of environmental concern or of contamination. The contractor's team shall include a licensed geotechnical engineer to interpret the report and develop foundation and earthwork recommendations and design parameters on which to base the contractor's proposal. The preliminary findings and evaluation presented in this report are based on widely-spaced explorations performed at the project site. Any additional subsurface investigations and laboratory analyses conducted to better characterize the site and to develop the final design shall be performed under the direction of a licensed geotechnical engineer and shall be the full responsibility of the contractor. A final geotechnical evaluation report shall be prepared by the licensed geotechnical engineer and submitted along with the first design submittal.

3. PROJECT DESCRIPTION.

The general purpose warehouse is needed to replace the troop issue subsistence activity (TISA) warehouse and offices destroyed by tornado on 16 April 2011. The project consists of over 49,000 square feet of warehouse space containing high bay storage facility, cold storage (refrigeration and freezer) facilities, and supporting administrative areas. The facility requires reinforced floors to handle forklift traffic; HVAC systems for temperature and humidity dependant materials; and loading docks with rollup doors and seals for truck loading and unloading. Supporting facilities include extension and connection of all necessary utilities, paving roads, sidewalks, and curb and gutter. Since the project will be constructed under a design/build contract, detailed structural information for the proposed buildings is unavailable.

4. EXPLORATION PROCEDURES.

a. Site Reconnaissance.

Prior to the field explorations, the proposed project site and surrounding areas were visually inspected by a geotechnical engineer. The observations were used in planning the exploration, in determining areas of special interest, and in relating site conditions to known geologic conditions in the area.

b. Field Exploration.

(1) Subsurface conditions at the project sites were explored by five soil test borings, (designated B-1 through B-5). The boring locations for the project are shown on the Soil Test Boring Plan in Attachment A of this report. Borings were drilled to depths of 25 feet.

(2) Boring locations were established in the field by an engineer using a hand-held Global Positioning System (GPS) device having sub-meter accuracy. Since the measurements were not precise, the locations shown on the boring location plans and the locations indicated on the boring logs should be considered approximate. The ground surface elevation at each boring location was determined by interpolation from the site topography survey; therefore, the elevation shown on the boring log should be considered approximate.

(3) The borings were drilled by Froehling & Robertson, Inc. of Raleigh, North Carolina under contract to the Savannah District. The borings were drilled with an ATV CME 550 drill rig; a 2 $^{1}/_{4}$-inch I.D. hollow stem auger was used to advance the boreholes. Split-barrel sampling with Standard Penetration Testing (SPT) was performed at intervals shown on the boring logs. All soil sampling and Standard Penetration Testing were in substantial accordance with ASTM D 1586. In the Standard Penetration Test, a soil sample is obtained with a standard 1 $^{3}/_{8}$-inch I.D. by 2-inch O.D. split-barrel sampler. The sampler is first seated 6 inches and then driven an additional 12 inches with blows from a 140 lb. hammer falling a distance of 30 inches. The number of blows required to drive the sampler the final 12 inches is recorded and is termed the "standard penetration resistance," or the "N-value." Penetration resistance, when properly evaluated, is an index of the soil's strength, density, and foundation support capability.

(4) Soil classifications shown on the boring logs were determined in the field by a geologist. Classification of the soil samples was performed in general accordance with ASTM D 2488 (Visual-Manual Procedure for Descriptions of Soils). The soil classifications include the use of the Unified Soil Classification System described in ASTM D 2487 (Classification of Soils for Engineering Purposes). Since the soil descriptions and classifications are based on visual examination, they should be considered approximate.

(5) Logs of the soil test borings graphically depicting soil descriptions, standard penetration resistances, and observed groundwater levels are included in Attachment B of this report.

5. SITE AND SUBSURFACE CONDITIONS.

a. Site Description.

The facility is located near the intersection of Cook Street and Warehouse Loop. The site was the location of the former TISA warehouse and the former map storage warehouse that were both destroyed by a tornado. The debris from these structures has been removed and the footprints of the former structures are now grassed fields. The fields are surrounded by paved parking areas and driveways. The site is relatively flat since it was previously developed. The site drains to beaver creek west of the property.

b. Regional and Site Geology.

(1) Fort Bragg is situated in the Sand Hills area of the Coastal Plain physiographic province of North Carolina. The Coastal Plain extends westward from the Atlantic Ocean to the Fall Line, a distance of about 130 miles. The Fall Line is the boundary between the Coastal Plain and the Piedmont physiographic provinces.

(2) Geologic units in the area, ranging from oldest to youngest, include the Carolina Slate Belt rocks, which comprise the basement rock, the Cape Fear Formation, and the Middendorf Formation. The Cape Fear and Middendorf Formations overlie the basement rock and are part of the generally southeastward-dipping and thickening wedge of sediments that constitute the Atlantic Coastal Plain deposits.

(3) The Middendorf Formation is exposed at land surface throughout the area. The formation is composed of tan, cross-bedded, medium and fine-grained, micaceous quartz sand and clayey sand interbedded with clay or sandy clay lenses or layers. Layers of hematite-cemented sandstone occur locally throughout the Middendorf Formation as do thin layers of hard kaolin and kaolin-cemented sandstone. Below the water table, these units are generally friable or plastic. In places, the Middendorf Formation is a mottled orange, gray, and tan color with streaks and laminae of red and purple hematite and manganese oxide stains.

c. Subsurface Conditions.

(1) Subsurface soils for the proposed warehouse site consist primarily of interbedded layers of clayey and silty sands (SC and SM) and lean and high plasticity clays (CL and CH). In the upper 12 feet of the borings, N-values of the sands ranged from 5 to 46. This indicates loose to dense material. Clays at this range of depth exhibited N-values ranging from 11 to 26 indicating stiff to very stiff consistencies. With the exception of Borings B-4, the boring logs indicate low blow count materials, including some “weight of hammer” drives, below a depth of approximately 13.5 to 18 feet. These low N-values indicate the deeper clays are very soft to soft in consistency and the sands are very loose to loose in density.

(2) The above subsurface description is of a generalized nature to highlight the major subsurface stratification features and material characteristics. The boring logs should be reviewed for specific information at individual boring locations. The stratifications shown on the

boring logs represent the conditions only at the actual boring locations. Variations may occur and should be expected between boring locations. The stratification lines shown on the boring logs represent the approximate boundaries between the subsurface materials; the actual transitions are typically more gradual.

d. Groundwater Conditions.

(1) Water levels were measured in all of the boreholes at the completion of drilling. The depth to groundwater varied significantly across the relatively small site. Groundwater was encountered as shallow as 16.8 feet below ground surface (bgs) and as deep as 38.6 feet bgs. This variation in depth to groundwater is indicative of perched water or groundwater confined below an impermeable soil layer.

(2) A "perched-water" condition occurs when water seeping downward is blocked by an impermeable soil layer, such as clayey sand or clay, and saturates the more permeable soil above it. The true groundwater level can be several to many feet below the perched water level. Due to the prevalence of interbedded clayey sands, silty sands, and clays at the project site, perched-water conditions could be encountered in the more permeable zones (cleaner sand layers) during construction. The soil test borings indicate that conditions favorable for perched water exist and could potentially occur during or after construction.

(3) "Confined groundwater" occurs when groundwater is separated from atmospheric pressure by zones of relatively impermeable soil. When such zones are penetrated by soil borings or wells, the water rises above the point at which it was first found because a confined aquifer is under pressure exceeding that of atmospheric pressure. Due to the prevalence of relatively impermeable clay layers overlying more pervious sandy zones at the project site, confined groundwater conditions could be encountered during construction.

(4) It should be noted that groundwater conditions vary during periods of prolonged drought and excessive rainfall as well as seasonally. Therefore, fluctuations in the elevation of the groundwater should be anticipated with changing climatic and rainfall conditions.

6. ENGINEERING EVALUATIONS AND RECOMMENDATIONS.

a. General.

The following evaluations and recommendations are based on the information available on the proposed structures, observations made at the project site, interpretation of the data obtained from the soil test borings, and previous experience with soils and subsurface conditions similar to those encountered at the site. It is emphasized that the preliminary findings and evaluation presented in this report are based on widely-spaced explorations performed at the project site. Additional subsurface investigations and/or laboratory analyses required to determine site soil conditions and develop the final design shall be performed under the direction of a licensed geotechnical engineer and shall be the full responsibility of the contractor.

b. Site Preparation.

Following clearing and removal of trees, structures, pavement, etc., the construction area should be grubbed and stripped of all vegetation, topsoil, organics, and other deleterious materials. Clean topsoil can be stockpiled and reused in landscaped areas. It is recommended that the zone of stripping extend a minimum of 10 feet beyond the outer edges of structures and pavements.

c. Foundation Design and Construction.

(1) Given the proposed site and the proposed structures, shallow spread foundations can most likely be used for support of the proposed buildings. However, the Contractor's consulting geotechnical engineer must determine the appropriate foundation system for the proposed structures and evaluate any impacts of the soft/loose soils encountered at depth in the attached borings. An adequate level of protection against structural failure due to uniform and/or differential foundation settlement or general shear shall be provided.

(2) Assuming shallow foundations are feasible, it is recommended that all load-bearing wall footings and column footings have a minimum width of 24 inches and a minimum depth of 24 inches, as measured from finish floor or finish grade, whichever is lower, to the bottom of the footing. For all other wall footings, the recommended minimum width is 18 inches and the recommended minimum depth is 18 inches, as measured from finish floor or finish grade, whichever is lower, to the bottom of the footing.

(3) Foundation excavations should be concreted as soon as practical following excavation. Exposure to the environment could weaken the soils at the footing bearing level should the foundation excavations remain open for an extended period of time. Bottoms of foundation excavations should be inspected immediately prior to placement of reinforcing steel and concrete to verify that adequate bearing soils are present and that all debris, mud, and loose, frozen or water-softened soils are removed. If the bearing surface soils have been softened by surface-water intrusion or by exposure, the softened soils must be removed to firm bearing and replaced with additional concrete during the concreting or replaced to design subgrade with No. 57 or No. 67 stone, compacted to a non-yielding condition. To minimize exposure, the final excavation (4 to 6 inches) to design subgrade could be delayed until just prior to placement of reinforcing steel and concreting.

d. Seismic Design.

Seismic loads should be computed in accordance with IBC 2009. The project site is anticipated to classify as Site Class D; however, the contractor's consulting geotechnical engineer should make the final determination for Site Class and recommend spectral accelerations for seismic design.

e. Concrete Slabs-On-Grade.

(1) Based upon past experience and the subsurface conditions encountered at the site, concrete floor slabs can be supported on densified in situ soils or on fill soils placed and

compacted in accordance with the recommendations presented in this report regarding structural fill. It is recommended that all concrete slabs-on-grade in inhabitable areas, including storage areas, be underlain by a minimum of 4 inches of open graded, washed pea gravel, or stone, often termed "capillary water barrier," to prevent the capillary rise of ground water. Nos. 57, 67, 78, or 89 stone could be used. It is also recommend that a moisture vapor barrier consisting of lapped polyethylene sheeting having a minimum thickness of 10 mils be provided beneath the building floor slabs to reduce the potential for slab dampness from soil moisture. Concrete slabs should be jointed around columns and along supported walls to minimize cracking due to possible differential movement.

(2) Construction activities and exposure to the environment often cause deterioration of the prepared slab-on-grade subgrade. Therefore, the slab subgrade soil shall be inspected and evaluated immediately prior to floor slab construction. The evaluation might include a combination of visual observations, hand rod probing, and field density tests to verify that the subgrade has been properly prepared. If unstable soil is revealed, the affected soil should be removed to firm bearing and replaced to design subgrade with suitable structural fill soil placed and compacted as recommended or replaced with additional capillary water barrier material.

f. Pavement Design.

The Contractor's consulting geotechnical engineer must determine the appropriate California Bearing Ratio (CBR) and Modulus to be utilized in the design of pavements. Since a final project grading plan has yet to be developed, it is not known where pavements, if any are included, will be located nor what soil types will be in the subgrades. However, clay (CH) is prevalent in the site subsoils, and it is possible they will be encountered in the subgrade of some of the pavement. The Contractor and his geotechnical engineer must address the treatment of high plasticity soils should they be encountered in the subgrades of pavements.

g. Groundwater and Surface-Water Considerations.

Due to the presence of clayey sand and clay layers in the subsoils at the project site, "perched-water" conditions could be encountered, and the accumulation of run-off water or seepage at the base of excavations may occur during foundation construction and site work. Water should not be allowed to collect near the foundation or on floor slab areas of the building either during or after construction. Undercut or excavated areas should be sloped toward one corner to facilitate removal of any collected rainwater, groundwater, or surface runoff. Positive site drainage should be provided to reduce infiltration of surface water around the perimeter of the building and beneath floor slabs.

h. Structural Fill.

In order to achieve high density structural fill, the following evaluations and recommendations are offered:

(1) Based on the soil test borings, excavated on-site soils (excluding any organics/topsoil and debris) can be used as structural fill. Some moisture content adjustment will probably be necessary to achieve proper compaction. If water must be added, it should be uniformly applied and thoroughly mixed into the soil by discing.

(2) It is recommended that the contractor have appropriate disc harrows on site during earthwork for mixing, drying, and wetting of the soils.

(3) Materials selected for use as structural fill should be free from roots and other organic matter, trash, debris, frozen soil, and stones larger than 3 inches in any dimension, and, in general, should have a liquid limit less than 50 percent and a plastic index of less than 30. The following soils represented by their Unified Soil Classification System (ASTM D 2487) group symbols will be suitable for use as structural fill: GP, GW, GC, GM, SP, SP-SM, SP-SC, SW, SC, SM, SM-SC, CL, and ML. The following soil types are considered unsuitable: Pt, OH, OL, CH, and MH.

(4) Suitable fill soils should be placed in lifts of maximum 8 inches loose measurement. The soil should be compacted by mechanical means such as steel drum, sheepsfoot, tamping, or rubber-tired rollers. Compaction of clays is best accomplished with a sheepsfoot or tamping roller. Periodically rolling with heavily loaded, rubber-tired equipment may be desirable to seal the surface of the compacted fill, thus reducing the potential for absorption of surface water following a rain. This sealing operation is particularly important at the end of the work day and at the end of the week. Within confined areas or foundation excavations, we recommend the use of manually operated, internal combustion activated compactors ("whacker packers" or sled tamps). The compactors should have sufficient weight and striking power to produce the same degree of compaction that is obtained on the other portions of the fill by the rolling equipment as specified. Where hand operated equipment is used, the soils should be placed in lifts of maximum 4 inches loose measurement.

(5) It is recommended that the structural fill and subgrades be compacted to the following minimum percents of the modified Proctor maximum dry density (ASTM D 1557):

Beneath structures and building slabs, to 5 feet beyond building and structure line, around footings and in trenches	92 percent
Beneath paved areas, except top 12 inches	92 percent
Beneath paved areas, top 12 inches	95 percent
Beneath shoulders	90 percent
Beneath sidewalks and grassed areas	85 percent
Base course beneath paved areas	100 percent

i. Construction Quality Control Testing.

(1) Prior to initiating any structural fill placement and/or compaction operations, it is recommended that representative samples of the soils which will be used as structural fill or subgrade, both suitable on-site soils and off-site soils (borrow), be obtained and tested to determine their classification and compaction characteristics. The samples should be carefully selected to represent the full range of soil types to be used. The moisture content, maximum dry density, optimum moisture content, grain-size, and plasticity characteristics should be

determined. These tests are required to determine if the fill and subgrade soils are acceptable and for compaction quality control of the subgrades and structural fill. Tests for the above soil properties should be in accordance with the following:

Moisture Content	ASTM D 2216
Maximum Dry Density and Optimum Moisture	ASTM D 1557
Grain-Size (Wash No. 200, less hydrometer)	ASTM D 422 and D 1140
Plasticity	ASTM D 4318

(2) A representative number of in-place field density tests should be performed in the subgrade of compacted on-site soils and in the structural fill and backfill to confirm that the required degree of compaction has been obtained. In-place density tests should be performed in accordance with the sand cone method prescribed in ASTM D 1556. It is recommend at least one density test be performed for each 5,000 square feet and 12,500 square feet, or portion thereof, for buildings and pavements, respectively, of compacted native soil subgrade and in each lift of compacted structural fill. It is also recommend that at least one density test be performed for each 100 linear feet in the bearing level soils of continuous footings. Density tests should be performed at 100-foot intervals along roadway subgrades. In addition, a density test should be performed for each 100 linear feet of backfill placed per foot of depth in trenches for utilities systems. Where other areas are compacted separately by manually operated compactors, a minimum of one density test should be performed for every 250 square feet, or portion thereof, of fill placed per foot of depth.

(3) Compaction control of soils requires the comparison of fill water content and dry density values obtained in the field density tests with optimum water content and maximum dry density determined in a laboratory compaction test performed on the same soil. It is, however, not feasible to do this as the testing could not keep pace with fill construction. It is therefore recommended that compaction control of the earthwork construction be performed using a "family" of compaction curves and the one-point or two-point compaction methods.

(4) Any area that does not meet the required compaction criteria should be reworked and retested. If the moisture content of the soil is within the recommended range, additional compaction may be all that is necessary to increase the density. If the moisture content is not within the recommended range; then, the moisture content should be adjusted to within the range and the area recompacted.

(5) All laboratory and field density testing should be performed by a commercial testing laboratory that has been validated by the Engineer Research and Development Center Materials Testing Center (MTC) under the Corps of Engineers laboratory inspection and validation program.

j. Drawings.

The drawing showing the soil boring locations completed by the Government is included in this RFP. These locations and the locations of any additional investigations (SPT borings, test pits, cone penetrometer tests, laboratory soils test data, etc.) performed by the AE's consulting

geotechnical engineer shall be shown on the final design and on the project as-built drawings completed by the design build contractor. In addition, the selected design-build contractor shall show all boring logs, CPT soundings, and soil laboratory test data used for design on the final design drawings and on the as-built drawings.

k. Specifications.

It is recommended that the AE use the Savannah District's EARTHWORK specification, 31 00 00, when editing the specifications for this project. The specification (SpecsIntact format) can be found at the following website: http://en.sas.usace.army.mil/enweb/httproot/ae/index.htm, under menu "Guide Specs".

7. FINAL GEOTECHNICAL EVALUATION REPORT.

A final geotechnical evaluation report shall be prepared by the contractor's licensed geotechnical engineer and submitted along with the first foundation design submittal. The geotechnical report shall summarize the subsurface conditions and provide recommendations for the design of appropriate foundations, floor slabs, retaining walls, embankments, roadways, and pavements. The report shall recommend the type of foundation system to be used, lateral load resistance capacities for foundation systems, and allowable bearing elevations for footings, grade beams, slabs, etc. An assessment of post-construction settlement potential including total and differential shall be provided. Recommendations regarding lateral earth pressures (active, at-rest, and passive) to be used in the design of retaining walls shall be provided. The report shall include the recommended spectral accelerations and Site Class for seismic design along with an evaluation of any seismic hazards and recommendations for mitigation, if required. Calculations shall be included to support the recommendations for bearing capacity, settlement, and pavement sections. Supporting documentation shall be included for all recommended design parameters such as Site Class, shear strength, earth pressure coefficients, friction factors, subgrade modulus, California Bearing Ratio (CBR), etc. In addition, the report shall provide earthwork recommendations, expected frost penetration, expected groundwater levels, recommendations for dewatering and groundwater control and identify the possible presence of any surface or subsurface features that may affect the construction of the project such as sinkholes, boulders, shallow rock, undocumented fill, old structures, soft areas, or unusual soil conditions.

ATTACHMENT A

Soil Test Boring Location Plan

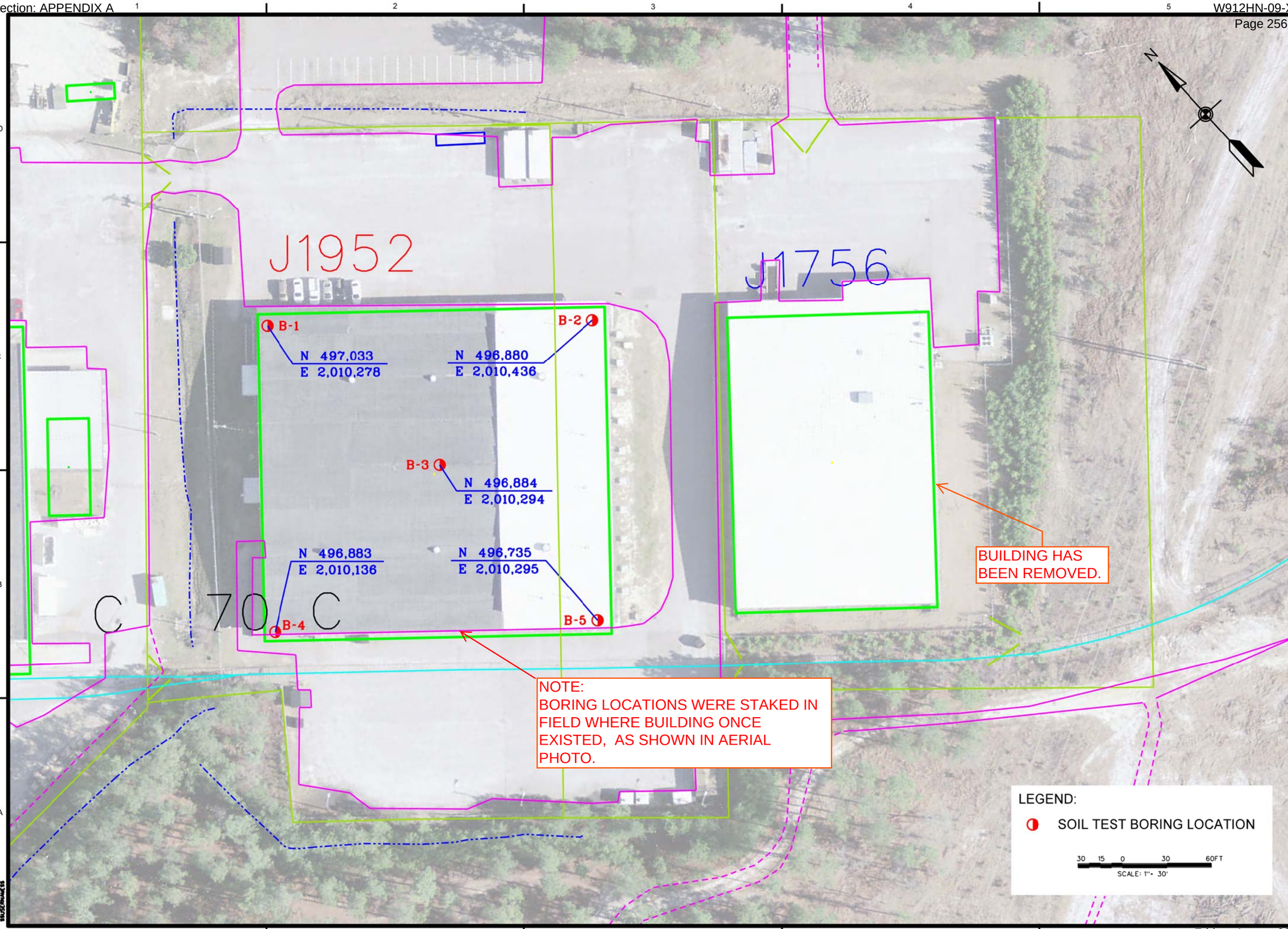
J1952
J1756
C 70 C
B-1
N 497,033
E 2,010,278
B-2
N 496,880
E 2,010,436
B-3
N 496,884
E 2,010,294
B-4
N 496,883
E 2,010,136
B-5
N 496,735
E 2,010,295
BUILDING HAS BEEN REMOVED.
NOTE:
BORING LOCATIONS WERE STAKED IN FIELD WHERE BUILDING ONCE EXISTED, AS SHOWN IN AERIAL PHOTO.
LEGEND:
SOIL TEST BORING LOCATION
30 15 0 30 60FT
SCALE: 1"= 30'
N
US ARMY CORPS OF ENGINEERS SAVANNAH
U. S. ARMY ENGINEER DISTRICT CORPS OF ENGINEERS SAVANNAH DISTRICT
GENERAL STORAGE WAREHOUSE FORT BRAGG, NORTH CAROLINA
SOIL TEST BORING LAYOUT PLAN
PLATE REFERENCE NUMBER
B-101
SHEET XX

ATTACHMENT B

Soil Test Boring Logs

FROEHLING & ROBERTSON, INC.

BORING LOG

Boring: B-1 (1 of 1)

Project No: 66L-0454-0013
Client: U.S. Army Corps of Engineers
Project: General Storage Whse, PN-80087, FY-12
City/State: Ft Bragg, NC

Elevation: 236.0 ±
Total Depth: 25.0'
Boring Location: N: 497033 E: 2010278

Drilling Method: 2.25" HSA
Hammer Type: Automatic
Date Drilled: 3/15/12
Driller: D.Tignor

Elevation	Depth	Description of Materials (Classification)	* Sample Blows	Sample Depth (feet)	N-Value (blows/ft)	Remarks
235.2	0.8	POSSIBLE FILL: Loose, brown, fine to medium silty SAND, with trace small gravel (SM).	5-5-5	0.0	10	GROUNDWATER DATA: 0 Hrs: Dry IAD with HSA in ground.
234.0	2.0	POSSIBLE FILL: Loose, dark red, fine clayey SAND (SC), slightly micaceous, trace small gravel.	4-4-3	1.5 2.0	7	
232.5	3.5	Loose, dark red fine clayey SAND (SC).	2-2-4	3.5	6	
		Loose, brown to dark brown clayey SAND (SC).		5.0		
			5-5-3	6.5	8	
227.5	8.5	Very stiff, light grey lean CLAY, with fine sand, low to medium plasticity (CL).	6-12-14	8.0 8.5 10.0	26	
222.5	13.5	Stiff, light tan, orangish mottling fat CLAY, high plasticity (CH).	4-5-7	13.5 15.0	12	
217.5	18.5	Soft, light tan, slightly orangish mottling CLAY (CH).	1-1-2	18.5 20.0	3	
212.0	24.0		3-2-2	23.5		
211.0	25.0	Very loose, organic black fine silty SAND, with black charcoal wood material (SM).		25.0	4	
		Boring Terminated at 25.0 feet.				Soil classification performed by US ACE.

*Number of blows required for a 140 lb hammer dropping 30" to drive 2" O.D., 1.375" I.D. sampler a total of 18 inches in three 6" increments. The sum of the second and third increments of penetration is termed the standard penetration resistance, N-Value.

FROEHLING & ROBERTSON, INC.

BORING LOG

Boring: B-2 (1 of 1)

Project No: 66L-0454-0013
Client: U.S. Army Corps of Engineers
Project: General Storage Whse, PN-80087, FY-12
City/State: Ft Bragg, NC

Elevation: 236.0 ±
Total Depth: 25.0'
Boring Location: N: 496880 E: 2010436

Drilling Method: 2.25" HSA
Hammer Type: Automatic
Date Drilled: 3/15/12
Driller: D.Tignor

Elevation	Depth	Description of Materials (Classification)	* Sample Blows	Sample Depth (feet)	N-Value (blows/ft)	Remarks
		POSSIBLE FILL: Reddish brown fine clayey SAND (SC), with trace rootlets.	5-4-4	0.0	8	GROUNDWATER DATA: 0 Hrs: 16.8' IAD with HSA in ground.
234.0	2.0	POSSIBLE FILL: Medium dense, brownish grey fine to medium clayey SAND, with trace small gravel (SC).	4-6-5	1.5 / 2.0	11	
232.5	3.5	Loose, grey, slight orange mottling, fine clayey SAND (SC).	3-3-5	3.5 / 5.0	8	
229.5	6.5	Stiff, grey, slight pinkish mottling, low plasticity CLAY (CL).	6-6-8	6.5 / 8.0	14	
227.5	8.5	Medium dense, grey fine to medium silty SAND (SM).	12-7-16	8.5 / 10.0	23	
222.5	13.5	Soft, grey, dark orange mottling fat CLAY (CH).	3-1-2	13.5 / 15.0	3	
217.5	18.5	Very soft, dark grey, micaceous fat CLAY (CH).	WOH-WOH-2	18.5 / 20.0	2	
212.5	23.5	Very loose, dark orange fine to medium silty SAND (SM).	7-1-1	23.5 / 25.0	2	
211.0	25.0	Boring Terminated at 25.0 feet.				Soil classification performed by US ACE.

*Number of blows required for a 140 lb hammer dropping 30" to drive 2" O.D., 1.375" I.D. sampler a total of 18 inches in three 6" increments. The sum of the second and third increments of penetration is termed the standard penetration resistance, N-Value.

FROEHLING & ROBERTSON, INC.

BORING LOG

Boring: B-3 (1 of 1)

Project No: 66L-0454-0013
Client: U.S. Army Corps of Engineers
Project: General Storage Whse, PN-80087, FY-12
City/State: Ft Bragg, NC

Elevation: 236.0 ±
Total Depth: 30.0'
Boring Location: N: 496884 E: 2010294

Drilling Method: 2.25" HSA
Hammer Type: Automatic
Date Drilled: 3/15/12
Driller: D.Tignor

Elevation	Depth	Description of Materials (Classification)	* Sample Blows	Sample Depth (feet)	N-Value (blows/ft)	Remarks
235.7	0.3	POSSIBLE FILL: Medium dense, orangish brown, fine to medium clayey SAND, with trace roots and small gravel (SC).	4-5-7	0.0		GROUNDWATER DATA: 0 Hrs: 18.4' IAD with HSA in ground.
235.2	0.8				12	
235.0	1.0			1.5		
		POSSIBLE FILL: Medium dense, dark red, fine clayey SAND (SC).	6-4-3	2.0		
					7	
232.5	3.5	POSSIBLE FILL: Medium dense, dark red, fine clayey silty SAND (SM).	3-4-5	3.5		
					9	
		Loose, dark orangish red, fine clayey SAND (SC).		5.0		
		Loose, dark brown, grey fine clayey SAND (SC).				
229.5	6.5	Stiff, grey lean CLAY with fine sand, low plasticity (CL).	2-5-7	6.5		
					12	
				8.0		
			6-8-11	8.5		
					19	
				10.0		
222.5	13.5	Soft, orangish brown fat CLAY, high plasticity (CH).	2-2-2	13.5		
					4	
				15.0		
217.5	18.5	Soft, grey, slight orange mottling, micaceious fat CLAY (CH).	2-1-2	18.5		
					3	
				20.0		
212.5	23.5	Very soft, pinkish grey, micaceous, low plasticity, fine to medium sandy lean CLAY (CL).	W-O-H	23.5		
					0	
				25.0		
207.5	28.5	Loose, dark orangish fine to medium silty SAND (SM).	4-2-4	28.5		
					6	
206.0	30.0	Boring Terminated at 30.0 feet.		30.0		Soil classification performed by US ACE.

*Number of blows required for a 140 lb hammer dropping 30" to drive 2" O.D., 1.375" I.D. sampler a total of 18 inches in three 6" increments. The sum of the second and third increments of penetration is termed the standard penetration resistance, N-Value.

FROEHLING & ROBERTSON, INC.

BORING LOG

Boring: B-4 (1 of 1)

Project No: 66L-0454-0013
Client: U.S. Army Corps of Engineers
Project: General Storage Whse, PN-80087, FY-12
City/State: Ft Bragg, NC

Elevation: 236.0 ±
Total Depth: 25.0'
Boring Location: N: 496883 E: 2010136

Drilling Method: 2.25" HSA
Hammer Type: Automatic
Date Drilled: 3/15/12
Driller: D.Tignor

Elevation	Depth	Description of Materials (Classification)	* Sample Blows	Sample Depth (feet)	N-Value (blows/ft)	Remarks
235.5	0.5	POSSIBLE FILL: Loose, brown fine silty SAND, trace rootlets (SM).	3-3-2	0.0	5	GROUNDWATER DATA: 0 Hrs: 19.8' IAD with HSA in ground.
234.0	2.0	POSSIBLE FILL: Loose, dark red, fine clayey SAND (SC).	6-8-7	1.5 / 2.0	15	
232.5	3.5	POSSIBLE FILL: Medium dense, grey fine silty SAND, with trace small gravel (SM).	4-5-6	3.5	11	
		Stiff to very stiff, grey lean CLAY, low to medium plasticity, slight orange mottling from 3.5'-6.5' (CL).	4-7-21	5.0 / 6.5	28	
227.5	8.5	Dense, grey fine to medium silty SAND (SM).	11-18-21	8.0 / 8.5 / 10.0	39	
222.5	13.5	Stiff, grey, orangish brown mottling medium to high plasticity CLAY (CH).	3-6-7	13.5 / 15.0	13	
217.5	18.5	Dense, dark, reddish orange, fine to medium silty SAND (SM).	6-22-24	18.5 / 20.0	46	
212.5	23.5			23.5		
212.2	23.8	Medium dense, tan to brown, fine silty SAND (SM).	5-6-14		20	
211.0	25.0	Medium dense, organic black fine silty SAND, with black (charcoal) wood material (SM).		25.0		Soil classification performed by US ACE.
		Boring Terminated at 25.0 feet.				

*Number of blows required for a 140 lb hammer dropping 30" to drive 2" O.D., 1.375" I.D. sampler a total of 18 inches in three 6" increments. The sum of the second and third increments of penetration is termed the standard penetration resistance, N-Value.

FROEHLING & ROBERTSON, INC.

BORING LOG

Boring: B-5 (1 of 2)

Project No: 66L-0454-0013
Client: U.S. Army Corps of Engineers
Project: General Storage Whse, PN-80087, FY-12
City/State: Ft Bragg, NC

Elevation: 236.0 ±
Total Depth: 40.0'
Boring Location: N: 496735 E: 2010295

Drilling Method: 2.25" HSA
Hammer Type: Automatic
Date Drilled: 3/15/12
Driller: D.Tignor

Elevation	Depth	Description of Materials (Classification)	* Sample Blows	Sample Depth (feet)	N-Value (blows/ft)	Remarks
		POSSIBLE FILL: Very loose, brown, fine clayey SAND, trace rootlets (SC).	3-1-1	0.0	2	GROUNDWATER DATA: 38.6' IAD with HSA in ground.
234.0	2.0	POSSIBLE FILL: Loose, brown fine clayey SAND, trace small gravel (SC).	3-2-3	1.5 / 2.0	5	
232.5	3.5	Very stiff, grey slight orangish to pinkish mottling lean CLAY, low plasticity (CL).	4-8-11	3.5 / 5.0	19	
			6-11-15	6.5 / 8.0	26	
227.5	8.5	Medium dense, orangish brown fine clayey SAND (SC).	16-16-11	8.5 / 10.0	27	
222.5	13.5	Loose, brown fine to medium silty SAND (SM).	5-4-6	13.5 / 15.0	10	
222.2	13.8	Loose, dark red, fine silty SAND, hematite (SM).				
217.5	18.5	Soft, tan, fat CLAY, high plasticity (CH).	2-1-2	18.5 / 20.0	3	
212.5	23.5	Very loose, brown fine to medium clayey SAND (SC).	1-0-1	23.5 / 25.0	1	
207.5	28.5	Very loose, organic black fine silty SAND, with black (charcoal) wood material (SM).	W-O-H	28.5 / 30.0	0	
202.5	33.5	Very loose, orange, grey fine clayey SAND (SC).	W-O-H	33.5	0	

*Number of blows required for a 140 lb hammer dropping 30" to drive 2" O.D., 1.375" I.D. sampler a total of 18 inches in three 6" increments. The sum of the second and third increments of penetration is termed the standard penetration resistance, N-Value.

FROEHLING & ROBERTSON, INC.

BORING LOG

Boring: B-5 (2 of 2)

Project No: 66L-0454-0013
Client: U.S. Army Corps of Engineers
Project: General Storage Whse, PN-80087, FY-12
City/State: Ft Bragg, NC

Elevation: 236.0 ±
Total Depth: 40.0'
Boring Location: N: 496735 E: 2010295

Drilling Method: 2.25" HSA
Hammer Type: Automatic
Date Drilled: 3/15/12
Driller: D.Tignor

Elevation	Depth	Description of Materials (Classification)	* Sample Blows	Sample Depth (feet)	N-Value (blows/ft)	Remarks
				35.0		
			WOH-1-1	38.5	2	
196.0	40.0	Boring Terminated at 40.0 feet.		40.0		Soil classification performed by US ACE.

*Number of blows required for a 140 lb hammer dropping 30" to drive 2" O.D., 1.375" I.D. sampler a total of 18 inches in three 6" increments. The sum of the second and third increments of penetration is termed the standard penetration resistance, N-Value.

BORING_LOG BORING LOGS.GPJ F&R.GDT 4/5/12

APPENDIX B

LIST OF DRAWINGS

(Not Used)

APPENDIX C:

Ft. Bragg Utility Connection Information

FORT BRAGG, NORTH CAROLINA
UTILITY CONNECTIONS

Updated 11 April 2012

A. SITE ELECTRICAL GENERAL REQUIREMENTS

1. Site coordination meetings shall be held at the start of design and when necessary thereafter. Meetings shall include all applicable parties including the installation Directorate of Public Works (DPW), Network Enterprise Center (NEC), the privatized electric utility company, the local cable television (CATV) company, the Design-Build Contractor and the Contracting Officer's Representative (COR). All design, demolition and construction work including schedules, capacities, equipment selection, equipment locations, utility routing, connection points and final connection responsibilities shall be addressed.

2. All coordination including exchanges of information between the Design-Build Contractor and the installation DPW, NEC, the privatized electric utility company, the local CATV company information and other utility entities shall be routed through the COR unless otherwise directed.

3. All electrical systems shall comply with the Installation Design Guide for a Sustainable Fort Bragg (http://www.bragg.army.mil/dpw/idg/) unless otherwise indicated. Requirements mandated by this RFP or mandated by criteria referenced by this RFP shall supersede the requirements of the Fort Bragg Installation Design Guide. Criteria such as Army Technical Manuals (TMs) referenced by the Fort Bragg Installation Design Guide but not referenced by this RFP shall not be regarded as mandatory.

B. ELECTRICAL PRIMARY DISTRIBUTION

1. The existing primary power distribution system at Fort Bragg is a 12470/7200 volts, three-phase, four-wire, grounded wye system. The primary distribution system is owned, managed, and maintained by a privatized electric utility company.

2. The primary distribution system to and within the project site shall be provided by the electric utility company and shall be a loop feed underground system where possible, and shall include primary conductors, ductlines, manholes, switches, sectionalizing cabinets, transformers with concrete pads, grounding, and metering. The electric utility company shall design and construct the primary distribution system in accordance with the Installation Design Guide for a Sustainable Fort Bragg (IDG), IEEE C2 National Electrical Safety Code and the RUS standards. No above ground distribution equipment shall be located within 33 feet of buildings.

3. The privatized electric utility company at Fort Bragg is Sandhills Utility Services (SUS).

The point of contact is Jeff Brown, 910-497-7399 x236, jeffbrown@sandhillsutility.com. All work done by the electric utility company shall be under a separate contract with the Government. This work is NOT part of this RFP.

4. The Design-Build Contractor shall develop a schedule with the electric utility company concerning transformer delivery times and any offsite utility upgrade projects required to provide power to this project. All schedules shall be coordinated to insure that all projects are completed without compromising the Beneficial Occupancy Date. The Design-Build Contractor shall furnish demand load data to the privatized utility and the COR in a timely manner to facilitate transformer procurement.

5. The privatized electric utility company shall demolish existing exterior primary lines and equipment no longer required on the project site(s).

6. Outages on the existing systems shall be scheduled for off peak times (nights and weekends) and shall be approved by DPW. A minimum of 2 weeks advance notification of outage shall be given. Full preparation shall be done before the outage to minimize the downtime duration.

C. ELECTRICAL SECONDARY DISTRIBUTION

1. The Design-Build Contractor shall be responsible for installing secondary service ductlines to the secondary compartment of the transformer. Secondary service ductlines shall be direct-burial, thick wall type except concrete encasement shall be provided in areas subject to vehicular traffic. Transitions from below-grade to above-grade shall be galvanized rigid steel. Fittings for steel conduit shall be steel threaded or compression type. Secondary service ductlines shall include one spare duct sized to match the filled ducts.

2. The Design-Build Contractor shall be responsible for installing secondary service cable from the building service equipment to the secondary compartment of the transformer. The cables shall be of sufficient length to facilitate their connection to the secondary lugs of the transformer. Installation of the cable terminators and connection to the transformer shall be done by the electric utility company. The Design-Build Contractor shall coordinate transformer sizes and locations and shall obtain transformer impedances from the privatized electric utility company to perform electrical calculations.

3. The Design-Build Contractor shall provide a 1-inch conduit from the electric utility meter to a data collection point located inside the building communications room.

D. SITE LIGHTING

1. Site lighting, defined as all exterior lighting outside of the building 5 foot line, is owned and maintained by the privatized electric utility company. Site lighting includes roadway, walkway, parking, physical training (PT) field, sports and area lighting.

2. Site lighting within the project site shall be designed by the Design-Build Contractor. The design shall comply with the recommendations of the Illuminating Engineering Society of North America (IESNA) and shall be based on the standard fixtures of the electric utility company approved for use at Fort Bragg.

3. Site lighting including fixtures, poles, foundations, conduit and wiring shall be procured and installed by the electric utility company. Site lighting circuits shall be fed from utility transformers; no site lighting circuits shall originate within a building.

4. The privatized electric utility company at Fort Bragg is Sandhills Utility Services. The point of contact is Jeff Brown at (910) 497-7399 x236. All work done by the electric utility company shall be under a separate contract with the Government. This work is NOT part of this RFP.

5. The privatized electric utility company shall demolish existing lighting structures and associated site conduit and wiring no longer required on the project site(s).

6. The Design-Build Contractor shall be responsible for the design and construction of exterior lighting mounted on the new buildings. Wall mounted site lighting fixtures shall be the fully shrouded, full cut-off type. Lighting of walkways within 5-feet of the building shall be the responsibility of the Design-Build Contractor.

7. The Design-Build Contractor shall calculate the site lighting power densities and shall demonstrate compliance with the requirements of ASHRAE 90.1. The Design-Build Contractor shall coordinate with the privatized electric utility company to obtain information required to calculate the site lighting power densities.

E. SITE COMMUNICATIONS

1. The telecommunications design shall be coordinated with and approved by the Network Enterprise Center (NEC) Quality Assurance Officer prior to construction. The NEC point of contact is Jim Epstein at (910) 908-1206, email address: jim.epstein@us.army.mil.

2. The Design-Build Contractor shall design and install the complete outside plant (OSP) telecommunications infrastructure in accordance with the requirements and recommendations of Installation Information Infrastructure Architecture (I3A) Technical Criteria.

3. All ductlines shall include one duct with two runs of 3-way Maxcell innerduct.

4. A minimum of 4 weeks advance notification shall be provided by the Design-Build Contractor prior to any demolition of communication lines or equipment. Notice shall be provided to NEC through the COR.

5. See site communications drawings for cabling (copper and fiber) and infrastructure (duct) tie-in points.

6. For additional requirements, see APPENDIX: Fort Bragg NEC IDC.

7. Unless a specific document version of date is indicated, use criteria from the most current references, including any applicable addenda, unless otherwise stated in the contract or task order, as of the date of the Contractor's latest accepted proposal or date of issue of the contract or task order solicitation, whichever is later. In the event of conflict between References and/or Applicable Military Criteria, apply the most stringent requirement, unless otherwise specifically noted in the contract or task order.

8. Ignore the following sentence in Section 01 10 00, Paragraph 5.8.6.2: "In lieu of BICSI certification, supervisors and installers shall have a minimum of 5 years experience in the installation of the specified copper and fiber optic cable and components. BICSI certification shall be required for supervisors and installers.

F. SITE CABLE TELEVISION (CATV)

1. Time Warner Cable is the local cable television (CATV) company at Fort Bragg. Time Warner Cable shall provide and install service cabling throughout the project site, terminating in the main electrical room of each building. The Design-Build Contractor shall coordinate site work and site/facility interfaces with Time Warner Cable.

G. CATHODIC PROTECTION SYSTEM

1. The Design-Build Contractor shall design and install a cathodic protection system for all ferrous metal pipes, tanks and equipment in contact with earth. The cathodic protection system shall comply with all applicable Federal, State and local regulations. The Design-Build Contractor shall obtain the services of a person qualified to engage in the practice of corrosion control of buried or submerged metallic surface. Such a person must be accredited or certified by the National Association of Corrosion Engineers (NACE) as a NACE Accredited Corrosion Specialist or a NACE certified Cathodic Protection Specialist, or must be a registered professional engineer with a minimum of five years experience in corrosion control and cathodic protection. The designer shall obtain soil resistivity data on site to assist in determining the cathodic protection requirements.

H. UNDERGROUND UTILITIES

The classification of existing underground utilities is Mr. Bruce Billings. He can be reached at (910) 907-3564 or at bruce.billings1@us.army.mil.

I. ADDITIONAL POINTS OF CONTACT

- Fort Bragg's Environmental Branch, point-of-contact (POC) Gary Cullen (910-432-8464)

- Natural Gas - Honeywell - The point-of-contact (POC) for information is John Gallagher at 910-436-0440 (cell 910-391-7357).

- Natural Gas – Fort Bragg - POC for Fort Bragg natural gas is Darryl Butler, 910-907-1760

- Chilled and Hot Water. Honeywell manages Chilled and Hot Water: Chilled Water (CW), and High Temperature Water (HW) utility services on Fort Bragg. The point-of-contact (POC) for information is John Gallagher.

- Fort Bragg's Environmental Branch, point-of-contact (POC) Gary Cullen (910-432-8464)

*1 APPENDIX D

Fire Flow Test

6/29/2012	FIRE HYDRANT No.			Pressure Readings (psi)				Coefficient	Diameter	TIME OF TEST	Test flow (gpm)	Predicted Flow @20 (gpm)	HYDRANT CLASS	Main Size
Site or Street	Test Hydrant	Flow Hydrant #1	Flow Hydrant #2	Static	Residual	Flow #1	Flow #2							
J-1952	1190	1089		110	91	35		1.38	2	0800	974	2256	**AA**	8

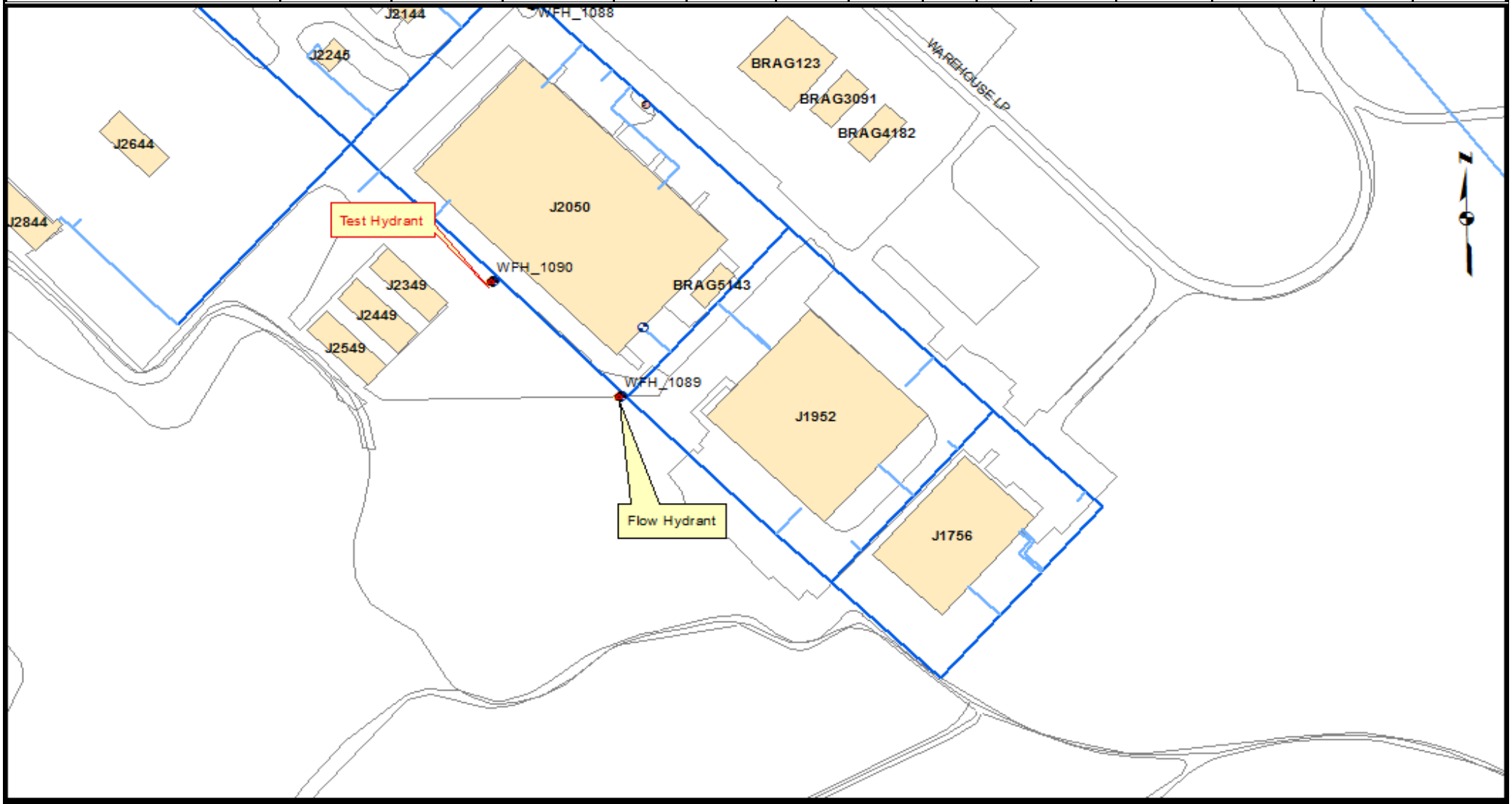

NOTES

1. FLOW DATA IS BASED ON EXISTING SYSTEM CONDITIONS AT TIME TEST.

FIRE FLOW REPORT

Old North Utility Services, Inc.
A Subsidiary of American States Utility Services, Inc.

APPENDIX E

ENVIRONMENTAL INFORMATION

(Not Used)

APPENDIX F
Conceptual Aesthetic Considerations

Howe Street Warehouse – Front

Howe Street Warehouse – Loading Bays

Howe Street Warehouse – Front

APPENDIX G
GIS Data
(Not Used)

Appendix H

Exterior Signage

2.2.6 Signage

Signs are used to visually communicate information and are a highly visible feature of the installation. Careful consideration must be given to their appearance and relation to the surroundings. Signs should be an attractive and harmonious part of the visual environment. The creation of a coordinated signage system will enhance Fort Bragg's visual image and improve the efficiency of movement.

Signage Reflects the Importance of the Activity Relative to the Installation

A sign system must communicate information effectively and efficiently. It must present a sequence and hierarchy of information that is logical and responsive to user needs. The system should provide a sense of consistency and continuity to the installation's overall visual image. It must be designed to be adaptable, compatible and integrated into the design of other site features.

The following criteria provides recommendations for the design and location of all signs at Fort Bragg. Signs not in compliance with these guidelines are not permitted unless approved by the DPW.

2.2.6.1 General Provisions

This section regulates all exterior signs and interior signs positioned for exterior observance. Signs should be used only as necessary. Redundant, unreadable, and outdated signs should be moved.

DPW approval is required prior to installing, painting, remodeling, relocating, or expanding any sign. No approval is required to perform normal maintenance and repair of a conforming sign or to change a message on a sign or marquee specifically designed for this purpose.

Other general sign provisions include the following:

- Public safety signs not exceeding two square feet do not require site approval. Examples include emergency telephone, restroom, and underground utilities.
- Street signs, not located in state rights-of-ways, do not require site approval.
- Signs placed for less than 30 days do not require site approval. These shall be removed by those placing them.
- Signs conforming to previous regulations, but not conforming to this guide, will be removed and replaced.
- Nonconforming signs shall not be enlarged, repaired, reconstructed, changed, including wording or graphics changes, except to comply.
- Signs not specifically outlined in this IDG are not authorized unless approved by the Garrison Commander. Examples include signs identifying S1, S2, S3, S4, classroom, motor pool, etc.
- Signs itemized in this section shall be placed at the appropriate buildings regardless of its real property category, unless specified otherwise.

Simplified Signs are Easy to Read

- No signs shall interfere with or confuse traffic or other aspects of safe driving conditions through use of improper wording, graphics, location, size, shape, or color. No sign shall use the words “Stop”, “Go”, “Caution”, Yield”, etc., when such would be confused with traffic signs or devices.

2.2.6.2 Sign Details

The following details shall apply to all signs at Fort Bragg:

- All signs will either be pre-manufactured from materials meeting or exceeding the EPA required minimum recycled content or fabricated by DPW. Low quality and “homemade” signs are prohibited.
- Any sign that is mechanically animated (i.e., revolves, rotates, or moves in any way) is prohibited.
- Signs will be brown Federal Specification Color Number 20059 and white (i.e., Park Service colors).

Acceptable Symbology Commonly used as Signage Graphics

- Locate signs where they are visible and unobstructed.
- Signs will not indicate building numbers, hours of operation, or names of individuals (commander, first sergeant, OIC, manager, etc.).
- Sign wording shall be brief and limited to essential information. Words may be abbreviated if the message remains easily understood.
- Commercial symbols are allowed only on MWR signs.
- Unit Insignias and logos are not allowed on signs.
- Signs generally are not landscaped; however, if ornamental planting occurs in the vicinity of the sign, locate the sign in the planting bed.
- Temporary signs do not require landscaping; changeable signs are not considered temporary.
- Any exposed lighting tubes, strings of lights, spotlights, or any illumination that causes direct glare upon an unrelated building are prohibited.
- Any flashing signs, traveling lights, or signs animated by lights of changing degrees of intensity or color are prohibited.

Caution should be used when Locating Signs to Avoid Obstructed Views

- Signs may be lit by remote lamps or backlit where nighttime identification is required such as at clubs, shopping areas, and post entry points.

- Internally lit signs must have an opaque message surface displayed at all times, and at no period will views be allowed to the inside of the sign regardless of whether a message is on the sign or not.
- Use of neon is allowed for entertainment/food-type uses. Approval is required by DPW.
- Typically, signs are single-sided if parallel to traffic flow. Signs that cannot be located parallel to the direction of traffic may be located perpendicular to traffic.
- Kiosks, informational signs, and "You Are Here" maps are to be centrally located in "Activity Nodes" as defined by the District Plate graphics.
- For military building signs, quantities are limited to one of each type allowed.
- For MWR Building signs, facilities shall use no more than two of the specified signs.
- Quantities are limited regardless of whether facilities are located on corners, have exposure to multiple roads/drives, or have building entrances visually separated from roads/parking lots.

Planting Beds can be Utilized to Accentuate Signage

ABCDEFGHIJKLMN
OPQRSTUVWXYZ

Use Helvetica Type Style Unless an Approved Alternative is Noted

ABCDEFGHIJKLMN
OPQRSTUVWXYZ
abcdefghijklmn
opqrstuvwxyz

Clarendon - The Alternative Type Style

- All signs, except as mentioned below, use Helvetica.
- Sign Types C, D and E Series use Clarendon medium.
- Traffic signs will follow guidelines in the Federal Highway Administration's "Standard Alphabets for Highway Signs and Pavement Markings" standards.

2.2.6.3 Sign Mounting and Location

Locate identification signs typically at building entrances and/or other parts of the building visible from the main access street. Building signs should be visible from the main circulation paths to the building (vehicular or pedestrian).

Place building and/or facility identification signs within the first 20 percent of the distance closest to the road between the road and the building. These signs shall be placed so as not to obscure any other identification, information or vehicular regulatory signs.

Signs that cannot be located parallel to the direction of traffic may be located perpendicular to traffic.

The minimum distance between sign and driveway or intersection should normally be 100 feet. One identification sign for each building is sufficient unless vehicular access occurs on two or more sides of the building.

Provide signs to identify facilities dedicated to or accessible to the handicapped, such as parking spaces, building entrances, and restroom facilities.

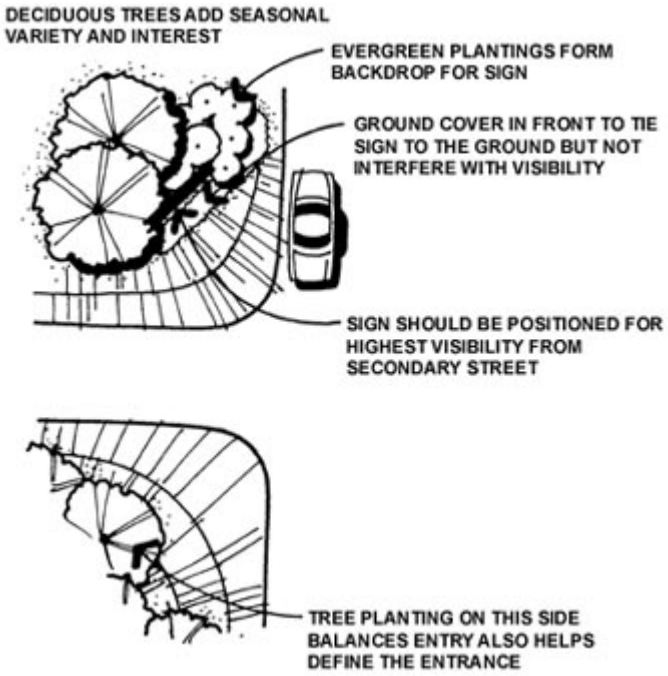

Consider Basic Planning and Design Objectives in Sign Placement

Mounting Signs on Buildings

When signs are mounted on buildings, the following requirements shall apply:

- No sign may be mounted on the outside of the door, except small signs (one square foot or less) that indicate required use of an alternate entrance.
- Signs such as “Escort Required” or changeable signs are not permitted.
- No sign may be attached or mounted to roofs and parapets.
- No sign shall be painted or applied directly onto the surface of a building.
- No permanent signs shall obstruct any window, door, fire escape, ladder, or opening intended for light, air, or egress.
- No temporary sign in windows or glass walls is allowed to cover more than 20 percent of the glass area.
- No signs shall interrupt the vertical and horizontal features of the facade.
- No sign may be tacked, posted, painted, or otherwise affixed to site elements such as sheds, trees, or structures.
- No sign may be attached to utility poles except for pole identification or warning.
- Fasten projecting signs directly to the supporting building wall and integrate the frame into the sign. These signs shall intersect at right angles to the building front and shall not extend above the roof line or the parapet wall.
- Signs may not project more than five feet from a wall or two-thirds the width of the sidewalk, whichever is less.
- In no case may signs be closer than 18 inches to the curb line. A minimum clear height of 8 feet 6 inches above the ground is required.

Mounting Multiple Signs

Mount multiple signs on a shared frame when it is necessary to site these signs in the same vicinity. Two Type A Series signs may be stacked vertically on one frame. Three Type A Series may be mounted side by side. Other signs may not ordinarily share a frame unless otherwise described.

2.2.6.4 Sign Descriptions

Type A1, Medium Metal - 36-inch by 30-inch metal panel colored brown with 3/4-inch white border and white reflective upper and lower-case letters. The sign is mounted on two metal "U-channel" posts colored brown (Fed. Std. 595B - #20059)

Type A2, Small Metal - 12-inch by 18-inch metal panel colored brown with 1/2-inch white border and white reflective letters. The sign is mounted on one metal "U-channel" post, horizontally or vertically.

Type A3, Small Metal - 18-inch by 24-inch metal panel colored brown with 1/2-inch white border and white reflective letters. The sign is mounted on one metal "U-channel" post or fence or wall, horizontally or vertically.

Type B, Large Metal Panel - 48, 60, or 72-inch by 36-inch metal panel colored brown (Fed. Std. 595B - #20059) with white ¾-inch border and white reflective upper and lower-case letters. Mount on two pressure treated wooden 4-inch by 4-inch posts.

Type C, Medium Redwood - 2-foot 6-inch by 8-foot 6-inch high-density urethane with 2-inch smooth border and sandblasted raised white reflective centered uppercase and lowercase letters. The sign is mounted on 6-inch by 6-inch pressure treated wooden posts, three on each end.

Type D1, Large Redwood Sign

Type D1, Large Redwood - 6-foot by 19-foot, 6-inch wide high-density urethane with 2-inch smooth border and sandblasted raised white reflective centered upper and lower case letters. The sign is mounted on 6-inch by 6-inch treated wooden posts, three on each end.

Type D2, Large Redwood

Type D2, Large Redwood - 7-foot by 24-foot high-density urethane panel with 3-inch smooth border and sandblasted raised white reflective centered upper and lower case letters. The sign is mounted on ten, 8-inch by 8-inch pressure treated wooden posts, five on each end.

Type E, Family Housing - 2-foot - 6-inch by 9-foot 6-inch high-density urethane panel with 2-inch smooth border and sandblasted, raised, white, reflective, centered, upper and lower case letters. The sign is cantilevered from five, 6-inch by 6-inch pressure treated wooden posts.

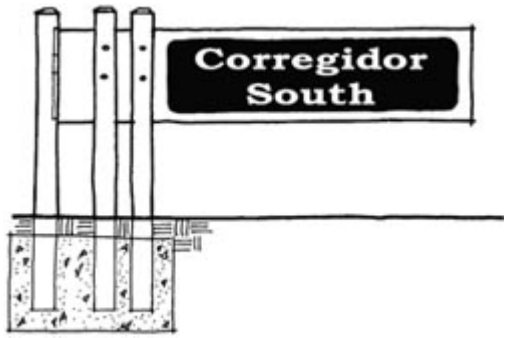

Type E, Family Housing Sign

Type F1, Building - 28-inch by 8-inch metal panel colored brown with white reflective letters and no border.

Type F2, House Number - 14-inch by 7-inch metal panel colored brown with white reflective letters and no border and mount in vicinity of the front door.

Type G, Chapel Sign - 5-foot by 3-foot-6 inches

synthetic panel colored white with black letters. The chapel name panel is one-foot high, white synthetic, with black letters lit internally. The sign is mounted on two 2 ½ -inch square, metal posts colored brown and capped with a finial.

Type H1, Large Synthetic - 10-foot by 6-foot prefabricated synthetic panel with colors complementary to the district colors within which it is placed. The sign is mounted on a brown 10- or 12-inch diameter pole. The overall sign height is limited to 22 feet. This sign may be affixed to a wall or lit internally.

Type H2, Individual Letter Signs - These are signs which consist of individual letters mounted directly onto a wall exclusive of any sign surface. Total area of the minimum imaginary rectangle or square of vertical and horizontal lines which fully encloses all sign words or message is ten feet by six-feet. Letters shall be professionally manufactured, reflective metal letters. Letter color shall be of high contrast to its mounting background. Faceted or sloped letter surfaces are optional. Letter style may be either Helvetica or Clarendon depending on the district character.

Type H3, School Signs - Variable message board 3-foot by 8-foot with surface mounted text may be used by schools. Sign may be single school color, will be internally lighted and may have a graphic of the school mascot. Mount on red brick base. Top of sign may not be higher than four feet above ground.

Type I, Variable Message Signs - Variable message board 4-foot by 8-foot with internal electronic text and graphics shall be brown (20059) on all sides with white letters and may have a graphic of the proponent. Mount on red brick base. Top of sign may not be higher than seven feet above ground.

2.2.6.5 Sign Categories

Military Building Signs

Any land use not mentioned below will use a sign that most closely matches one mentioned.

See Sign Description (Section 2.2.6.4) for sign type descriptions.

• Battalion-Level Commands	Type B
• Brigade/Group Regiment	Type C
• Company/Battery/Detachment	Type A1
• Corps Headquarters	Type D1
• Business Centers	Type C
• Education Centers and Annexes	Type A1
• “G-Level” Staff Sections	Type A1
• Medical and Health Care Facilities	Type C (except small clinics
• Offices/Activities Frequented by non-Fort Bragg Personnel (e.g., Defense Reutilization & Marketing Office, Central Receiving, I.D. Card Facility)	Type B
• Special Administration Offices Sections (e.g., Personnel Services Center, Enlisted Records, Officer Records, etc.)	Type A1
• Reenlistment Offices	Type A1
• “Flag-Level” Tenant Units	Type C

Morale/Recreation Building Signs

Any land use not mentioned below will use a sign that most closely matches one mentioned.

See Sign Description (Section 2.2.6.4) for sign type descriptions.

• Arts and Crafts	Type A1
• Auto Craft Shop	Type A1
• Automatic Teller Machine	Type A1
• Bakeries	Type H1, H2
• Banks	Type H1, H2
• Barbershop	Type H1, H2
• Bowling Alley	Type H1, H2
• Car Rental	Type H1, H2
• Car Wash	Type H1, H2
• Chapel	Type G
• Child Care Center	Type C
• Clubs in Permanent Buildings	Type C
• Clubs in Temporary Buildings	Type A1
• Commissary	Type H1, H2
• Gas Station	Type H1, H2
• Guest Quarters	Type E
• Laundromat	Type H1, H2
• Library	Type C
• Movie Theater/Playhouse	Type H1, H2
• Museum	Type C
• Rent-All	Type H1, H2
• Restaurant	Type H1, H2
• Schools	Type H3
• Snack Bar/Shop	Type A1
• Telephone Center	Type A1
• Thrift Shop	Type A1
• Youth Center	Type I
Recreation Signs	
• Golf Course	Type C
• Gymnasium/Physical Fitness Center	Type C
• Horse Stable	Type A1
• Motorcycle Track	Type A1
• Parade Field	Type C
• Skating Rink	Type H1, H2
• Sports Field	Type A1
• Stadium	Type A1
• Recreational (All uses not listed)	Type A1

Building Numbers Signs

Use Type F1 for all facilities, temporary and permanent. These signs are required for emergency identification and/or real property management purposes. These also include sports fields, lift stations, shelters, and fuel dispensing buildings.

Excluded from this requirement are family housing units, contractor trailers/buildings, relocatable/port-able structures, utilities, fences and transportation systems such as roads, sidewalks, and railroads.

Family Housing Building Numbers

Use Type F1 for all facilities.

Other Signs

- Billboards

  Use billboards at parade fields only. Any other sign that directs attention to a business attraction, or entertainment conducted at a location other than the premises where the sign is located, must be combined with other signs of similar character or type and requires specific site and design approval by DPW.

- Contractor Facilities

  Use Sign Type A1.

- Directional Signs

  Use these signs only for facilities frequented by non-Fort Bragg personnel. Typical examples, include post exchange, commissary, contracting, hospital, information center, and museum.

  These are to be located only on major thoroughfares. Use the Federal Highway Administration's "Standard Alphabets for Highway Signs and Pavement Markings" standards.

- Historic Facilities

  Upon approval from Cultural Resources historical plaques may be used for any facility properly listed on the State or National Register of Historic Places.

- Memorialized Facilities

  Upon approval of the Memorialization Board, special facilities may be identified by a Type C sign.

- Parking Lot Signs

  These signs include handicapped, General Officer, Command Sergeant Major, Mayor, Military Vehicle, Mother with Child, and Visitor spaces. One type A2 for every two spaces.

  No reserve parking signs, besides those already mentioned, are allowed for any commanding officer, noncommissioned officer, or executive officer. No "Permit Parking Only" signs are authorized.

- Portable Signs

  These signs are prohibited. Portable is defined as signs designed to be transported from one location to another, with or without wheels or trailer, and typically have a changeable message area.

- Residential Business Signs

  These signs are prohibited. Examples include home day-care identification.

- Restricted Area Signs

Use Type A2 when authorized by the Provost Marshal. Sign color will be brown 20059.

- Supplemental Building/Structures Signs

These signs are prohibited. Examples include paint or storage shed and kiosk or shelter identification. Safety/Warning signs specifically associated with a supplemental building/structures are allowed.

- Temporary Signs

Signs placed for less than 30 days do not require DPW approval.

- Advertisement/Business Announcement

One sign per location not exceeding 20 square feet. Examples include “Grand Opening”, “Under New Management” and similar announcements. Sign display period limited to 30 days and only once per year per vendor.

- Banner

Limited to a maximum of 3-foot by 25-foot fabric material.

Banners mounted on or attached to buildings, structures, and utility poles must have DPW site approval. Sign display period limited to 30 days.

- Construction Signs

One sign per location not exceeding 32 square feet.

- Official Notices, Fairs, and Special Programs

Two per building or location and/or two per intersection. Sign display period limited to 30 days.

- Seasonal Displays

Displays not advertising a product, service, or entertainment require no DPW approval and will be treated as temporary signs.

METAL PANEL WITH 3M BROWN COATING WITH WHITE 3/4" BORDER AND WHITE REFLECTIVE UPPER AND LOWER CASE HELVETICA MEDIUM LETTERS. MOUNT ON 2) 4 X 4 PRESSURE TREATED WOOD POSTS PAINTED BROWN. PAINT BACK OF SIGN ALSO

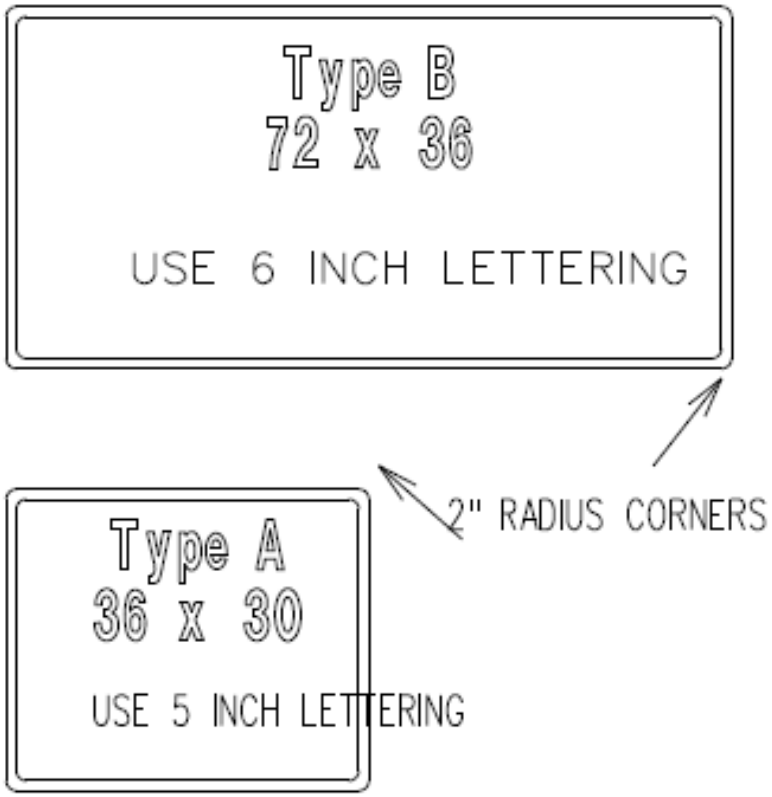

Type B

Text for this project signage shall state:

82d BSB

TEMF

APPENDIX I
Acceptable Plant List

IDG Practical Plantings

			Zone			Type		Function				Light			Moisture Level			Bloom Color					Bloom Season				Plant Density		High Maintenance		ATFP Compliant	
ID#	Common Name	Scientific Name	Natural	Urban	Historical	Evergreen	Deciduous	Habitat	Shade	Screen	Erosion Control	Full Sun	Part Sun	Shade	Wet	Medium	Dry	White/Green	Red	Purple/Blue	Yellow/Orange	Pink	Spring	Summer	Fall	Winter	Massing	Stand Alone	Yes	No	Yes	No
	Tall Trees	**>20' Tall**																														
TT01	American holly	Ilex opaca	●	●	●	●		●	●	●	●	●	●	●	●	●		●					●		●		●	●		●		●
TT02	Atlantic white cedar	Chamaecyparis thyoides	●	●	●	●		●	●	●	●	●	●	●	●	●									●		●	●		●		●
TT03	Darlington oak	Quercus laurifolia	●	●	●	●	●	●	●		●	●	●			●	●						●		●			●		●		●
TT04	Live oak	Quercus virginiana	●	●	●	●	●	●	●		●	●	●			●	●						●		●			●		●		●
TT05	Longleaf pine	Pinus palustris	●	●	●	●		●	●	●	●	●	●		●	●	●						●		●		●	●		●		●
TT06	Red maple	Acer rubrum	●	●	●		●	●	●		●	●	●		●				●				●			●		●		●		●
TT07	Southern magnolia	Magnolia grandiflora	●	●	●	●		●	●	●	●	●			●	●		●					●		●		●		●			●
TT08	Tulip poplar	Liriodendron tulipifera	●	●	●		●	●	●		●	●	●		●	●					●		●		●			●		●		●
TT09	White oak	Quercus alba	●	●	●		●	●	●		●	●	●			●	●						●		●		●	●		●		●
TT10	Willow oak	Quercus phellos		●	●		●	●	●			●	●			●	●						●		●			●		●		●
	Small Trees	**8' to 20' Tall**																														
ST01	Chickasaw plum	Prunus angustifolia	●	●	●		●	●	●		●		●				●	●					●			●	●	●			●	
ST02	Crepe myrtle*	Lagerstroemia indica			●		●	●	●	●	●	●	●				●	●	●	●		●		●			●	●	●	●		●
ST03	Chokeberry	Sorbus arbutifolia	●	●	●		●	●	●		●		●	●	●	●		●				●	●		●		●	●		●	●	
ST04	Dogwood	Cornus florida	●	●	●		●	●	●	●	●	●	●	●		●	●	●				●	●	●			●	●		●	●	
ST05	Easter red cedar	Juniperus virginiana	●	●	●	●		●	●	●	●	●	●			●	●						●		●			●		●		●
ST06	Juneberry	Amelenchier candensis		●	●		●	●			●	●	●		●	●	●						●				●	●		●	●	
ST07	Persimmon	Diospyros virginiana	●	●	●		●	●	●		●		●	●		●	●		●		●	●	●	●	●		●	●		●	●	
ST08	Redbud	Cercis canadensis	●	●	●		●	●	●		●	●	●			●	●			●			●				●	●		●	●	
ST09	Sassafras	Sassafras albidum	●	●	●		●	●			●	●	●			●	●	●	●			●	●	●			●	●		●	●	
ST10	Sourwood	Oxydendrum arboreum	●	●	●		●	●	●	●	●		●	●		●	●	●						●	●			●		●	●	
ST11	Yaupon tree	Ilex vomitoria	●	●	●	●		●	●	●	●	●	●	●	●	●			●				●		●		●	●		●	●	
	Large Shrub	**4' to 8' Tall**																														
LS01	Camellia*	Camellia japonica		●	●	●		●	●	●	●	●							●			●				●	●	●		●		●
LS02	Kalmia	Kalmia latifolia	●	●	●	●		●	●		●		●		●	●	●	●				●	●		●		●	●		●		●
LS03	Oakleaf hydrangea	Hydrangea quercifolia	●	●	●		●	●			●			●			●	●									●			●		●
LS04	Redbay	Persea borbonia	●	●	●	●		●	●	●	●		●	●	●	●		●						●			●	●		●		●
LS05	Rhododendron	Rhododendron spp.	●	●	●	●		●			●	●	●			●		●				●		●	●		●	●		●		●
LS06	Rose of sharon*	Hibiscus syriacus	●	●	●		●	●		●	●	●	●					●		●		●		●	●		●			●		●
LS07	Serviceberry	Amelanchier arborea	●	●	●		●	●	●	●	●	●	●					●					●	●			●			●		●
LS08	Wax myrtle	Myrica cerifera	●	●	●	●	●	●	●	●	●	●	●		●	●	●						●			●	●	●		●		●
	Medium Shrub	**2' to 4' Tall**																														
MS01	Acuba variegated*	Acuba spp.			●	●		●			●		●	●			●	●					●		●		●	●		●		●
MS02	Azalea*	Rhododendron spp.		●	●			●			●			●			●	●	●	●		●	●	●			●			●		●
MS03	Gardenia*	Gardenia spp.		●	●			●			●			●		●	●	●									●			●		●
MS04	Strawberry bush	Euonymus americanus	●	●	●	●	●	●			●				●	●			●		●		●		●		●			●		●
MS05	Sweet pepperbush	Clethra alnifolia	●	●	●		●	●			●	●	●		●	●		●						●	●		●	●		●		●
	Small Shrub	**0' to 2' Tall**																														
SS01	Azalea evergreen*	Rhododendron spp.		●	●	●		●			●		●	●		●		●				●		●	●		●			●		●
SS02	Big Hosta*	Hosta lancifolia		●	●		●	●	●		●		●	●		●											●			●		●
SS03	Dwarf Gardenia*	Gardenia spp.		●	●	●		●			●		●	●		●	●	●									●			●		●
SS04	Dwarf Nandina*	Nandina domestica		●	●		●	●		●	●	●	●			●	●										●			●		●
SS05	Dwarf Yaupon	Ilex vomitoria 'Nana'	●	●	●	●		●			●	●	●		●	●			●				●		●		●			●		●
SS06	Hawthorne	Crataegus spp.	●	●	●			●	●	●	●	●	●			●	●	●					●				●			●		●
SS07	Little Bluestem	Andropogon scoparius	●	●				●		●	●						●							●	●					●	●	
SS08	Purple Muhly grass	Muhlenbergia capillaris		●	●		●		●	●	●	●	●			●	●				●						●			●		●
	Groundcover	**<1' Tall**																														
GC01	Ajuga*	Ajuga reptans			●	●		●			●		●							●			●				●			●	●	
GC02	Brachen Fern	Pteridum aquilinum	●	●	●	●					●		●	●		●		●							●		●			●	●	
GC03	Dwarf Huckleberry	Gaylussacia dumosa	●	●	●		●	●			●	●	●			●	●	●					●	●			●			●	●	
GC04	Dwarf Iris	Iris verna	●	●	●		●	●			●	●						●					●				●				●	
GC05	Liriope*	Liriope spp.		●	●			●	●		●		●			●	●	●		●							●			●		●
GC06	Periwinkle spp.*	Vinca major	●	●	●	●		●			●		●			●	●	●		●		●	●				●			●		●
GC07	Periwinkle spp.*	Vinca minor			●	●	●	●			●		●			●	●			●			●	●			●			●	●	
GC08	Phlox	Phlox spp.			●	●		●			●		●			●	●	●		●			●	●			●			●	●	
GC09	Well's delight	Vaccinium crassifolium	●	●	●	●		●			●	●	●			●		●					●	●			●			●	●	
GC10	Wiregrass	Aristida stricta	●	●	●	●		●	●	●	●	●	●			●	●				●				●		●			●		●

* Non-native plant to Sandhills region; discontinue use of planting by FY 2013.

Last Modified: 9 June 2011

APPENDIX J
Drawings
(Provided Under Separate Cover)

APPENDIX K

FUEL COST INFORMATION

Appendix K

Utility Data for Life Cycle Cost Analysis (BLCC)
December 2009

The following utility rates reflect Fort Bragg's FY2009 costs. The utility costs are strictly for the commodity costs. No capital cost for infrastructure improvements or distribution expenses are included. In applying the energy costs to the BLCC, the NIST escalation rates should be applied.

Electricity: Fort Bragg purchases power from Progress Energy under an experimental real-time tariff (RTP-LGS-TOU-14). There is a baseline purchase (approximately 90% of the total demand). The additional power is purchased on a real-time basis. Anyone dealing with active energy management such as thermal storage or demand management should contact the DPW Energy Group.

The 2009 electricity blended rate➔ $.0616/kWh[1]

The prices vary according to the balance of supply and demand in the system. The RTP prices range from $.035/kWh in the spring and fall to $.90/kWh during summer peaks. During the summer there is usually a significant difference between on-peak (10AM-10PM) and off-peak hours. The historic averages for the summer (May-September) are $.05/kWh off-peak and $.09/kWh on-peak. The rest of the year is $.04/kWh off-peak and $.055/kWh on-peak.

Natural Gas: Fort Bragg purchases firm transport gas and it is delivered by Piedmont Natural Gas. Prices fluctuate monthly with the market.

The 2009 natural gas average burner tip rate➔ $7.19/MMBtu

Water➔ $1.1441/kgal

Sewage➔ $0.7433/kgal

District Heating System - Medium Temperature Hot Water➔ $9.00/MMBtu (Indexed on natural gas prices)

District Cooling System - Chilled Water➔ $.042/tonh (Indexed on electricity prices)

[1] Based on Progress Electric main electric bill, which represents more than 94% of the Cantonment consumption

APPENDIX L
LEED Project Credit Guidance

LEED Project Credit Guidance (MAY 10)

Fort Bragg (08 March 2012)

This spreadsheet indicates Army required credits, Army preferred credits, project-specific ranking of individual point preferences, assumptions guidance for individual credits, and references to related language in the RFP for individual credits.

LEED Credit Paragraph	LEED Project Credit Guidance	**Army Guidance:** Required - Preferred - Avoid	**Project Preference Ranking**: (1=most preferred, blank=no preference, X=preference not applicable to this credit, Rqd=required)	
PAR	**FEATURE**			**REMARKS**
SUSTAINABLE SITES				
SSPR1	Construction Activity Pollution Prevention (PREREQUISITE)	Rqd	Rqd	All LEED prerequisites are required to be met.
SS1	Site Selection		X	See paragraph LEED CREDITS COORDINATION.

SS2	Development Density & Community Connectivity - OPTION 1 DENSITY		X	See paragraph LEED CREDITS COORDINATION.
	Development Density & Community Connectivity - OPTION 2 CONNECTIVITY		X	See paragraph LEED CREDITS COORDINATION.
SS3	Brownfield Redevelopment		X	See paragraph LEED CREDITS COORDINATION.
SS4.1	Alternative Transportation: Public Transportation Access		X	See paragraph LEED CREDITS COORDINATION.
SS4.2	Alternative Transportation: Bicycle Storage & Changing Rooms	Pref	2	Assume that non-transient building occupants are NOT housed on Post unless indicated otherwise.
SS4.3	Alternative Transportation: Low Emitting & Fuel Efficient Vehicles - OPTION 1		Prohib	This credit is prohibited by Fort Bragg Garrison Commander.
SS4.3	Alternative Transportation: Low Emitting & Fuel Efficient Vehicles - OPTION 2	Pref	Prohib	This credit is prohibited by Fort Bragg Garrison Commander.
SS4.3	Alternative Transportation: Low Emitting & Fuel Efficient Vehicles - OPTION 3		Prohib	This credit is prohibited by Fort Bragg Garrison Commander.
SS4.4	Alternative Transportation: Parking Capacity	Pref	Prohib	This credit is prohibited by Fort Bragg Garrison Commander.
SS5.1	Site Development: Protect or Restore Habitat			
SS5.2	Site Development: Maximize Open Space	Pref		Assume AGMBC option for aggregated open space at another location on the installation is not available to the project unless indicated otherwise.

SS6.1	Stormwater Design: Quantity Control	Pref	2	See paragraph STORMWATER MANAGEMENT.
SS6.2	Stormwater Design: Quality Control	Pref	2	See paragraph STORMWATER MANAGEMENT.
SS7.1	Heat Island Effect: Non-Roof			
SS7.2	Heat Island Effect: Roof	Pref	2	Coordinate with nearby airfield requirements, which may preclude this credit.
SS8	Light Pollution Reduction	Pref		
WATER EFFICIENCY				
WEPR1	Water Use Reduction (Version 3 only)	Rqd	Rqd	All LEED prerequisites are required to be met.
WE1.1	Water Efficient Landscaping: Reduce by 50%	Pref	1	See paragraph IRRIGATION. Project must include landscaping to be eligible for this credit.
WE1.2	Water Efficient Landscaping: No Potable Water Use or No Irrigation	Pref	2	Project must include landscaping to be eligible for this credit.
WE2	Innovative Wastewater Technologies - OPTION 1		1	
WE2	Innovative Wastewater Technologies - OPTION 2			
WE3	Water Use Reduction	Pref	2	See paragraph BUILDING WATER USE REDUCTION.
ENERGY AND ATMOSPHERE				
EAPR1	Fundamental Commissioning of the Building Energy Systems (PREREQUISITE)	Rqd	Rqd	All LEED prerequisites are required to be met.
EAPR2	Minimum Energy Performance (PREREQUISITE)	Rqd	Rqd	All LEED prerequisites are required to be met.

EAPR3	Fundamental Refrigerant Management (PREREQUISITE)	Rqd	Rqd	All LEED prerequisites are required to be met.
EA1	Optimize Energy Performance	Rqd	1*	Earning of LEED EA1 points as indicated in paragraph ENERGY CONSERVATION, as a minimum, is required. *Maximization of this is Fort Bragg most preferred credit.
EA2.1	On-Site Renewable Energy	Pref		See paragraph ENERGY CONSERVATION.
EA3	Enhanced Commissioning	Rqd		See paragraph COMMISSIONING. The Commissioning Authority may be provided through the Design-Build Contractor only if in accordance with USGBC Credit Interpretation Ruling (CIR) dated 9/15/06. Commissioning Authority activities begin during design phase and continue well beyond beneficial occupancy. Assume Government will not provide CxA post-occupancy activities unless indicated otherwise.
EA4	Enhanced Refrigerant Management			
EA5	Measurement & Verification		1	If this credit is pursued, Fort Bragg will perform and document the following: Track performance, evaluate energy efficiency. All other required activities and documentation are by the Comntratctor..
EA6	Green Power		X	See paragraph LEED CREDITS COORDINATION.
MATERIALS AND RESOURCES				

MRPR1	Storage & Collection of Recyclables (PREREQUISITE)	Rqd	Rqd	All LEED prerequisites are required to be met. Coordinate with Installation during design development on collection service and receptacles.
MR1	Building Reuse			
MR2.1	Construction Waste Management: Divert 50% From Disposal	Pref		See paragraph CONSTRUCTION AND DEMOLITION WASTE MANAGEMENT.
MR2.2	Construction Waste Management: Divert 75% From Disposal	Pref	2	
MR3	Materials Reuse			
MR4.1	Recycled Content: 10% (post-consumer + 1/2 pre-consumer)	Pref	1	See paragraph RECYCLED CONTENT.
MR4.2	Recycled Content: 20% (post-consumer + 1/2 pre-consumer)	Pref	2	
MR5.1	Regional Materials:10% Extracted, Processed & Manufactured Regionally		1	
MR5.2	Regional Materials:20% Extracted, Processed & Manufactured Regionally		2	

MR6	Rapidly Renewable Materials	Pref		See paragraph BIOBASED AND ENVIRONMENTALLY PREFERABLE MATERIALS and paragraph FEDERAL BIOBASED PRODUCTS PREFERRED PROCUREMENT PROGRAM.
MR7	Certified Wood	Pref		See paragraph BIOBASED AND ENVIRONMENTALLY PREFERABLE MATERIALS.
INDOOR ENVIRONMENTAL QUALITY				
EQPR1	Minimum IAQ Performance (PREREQUISITE)	Rqd	Rqd	All LEED prerequisites are required to be met.
EQPR2	Environmental Tobacco Smoke (ETS) Control (PREREQUISITE)	Rqd	Rqd	All LEED prerequisites are required to be met. Assume all buildings are smoke free unless indicated otherwise (family housing, barracks and other lodging are facility types where smoking may be permitted in some cases).
EQ1	Outdoor Air Delivery Monitoring		3	
EQ2	Increased Ventilation			
EQ3.1	Construction IAQ Management Plan: During Construction	Pref	3	See paragraph CONSTRUCTION IAQ MANAGEMENT.
EQ3.2	Construction IAQ Management Plan: Before Occupancy	Pref	3	See paragraph CONSTRUCTION IAQ MANAGEMENT.
EQ4.1	Low Emitting Materials: Adhesives & Sealants	Pref	4	See paragraph LOW-EMITTING MATERIALS.
EQ4.2	Low Emitting Materials: Paints & Coatings	Pref	4	See paragraph LOW-EMITTING MATERIALS.
EQ4.3	Low Emitting Materials: Carpet/Flooring Systems	Pref	4	See paragraph LOW-EMITTING MATERIALS.

EQ4.4	Low Emitting Materials: Composite Wood & Agrifiber Products	Pref	4	See paragraph LOW-EMITTING MATERIALS.
EQ5	Indoor Chemical & Pollutant Source Control	Pref	4	System requiring weekly cleaning to earn this credit is not a permitted option unless indicated otherwise.
EQ6.1	Controllability of Systems: Lighting			
EQ6.2	Controllability of Systems: Thermal Comfort			
EQ7.1	Thermal Comfort: Design	Rqd		See paragraph HEATING, VENTILATING AND AIR CONDITIONING.
EQ7.2	Thermal Comfort: Verification			Project must earn credit EQ7.1 to be eligible for this credit. Assume Government will not provide post-occupancy activities unless indicated otherwise.
EQ8.1	Daylight & Views: Daylight 75% of Spaces	Pref	2	See paragraph DAYLIGHTING.
EQ8.2	Daylight & Views: Views for 90% of Spaces	Pref	2	
INNOVATION & DESIGN PROCESS				
IDc1.1	Innovation in Design			See paragraph INNOVATION AND DESIGN CREDITS. Assume Government will not provide any activities associated with ID credits.
IDc1.2	Innovation in Design			
IDc1.3	Innovation in Design			
IDc1.4	Innovation in Design			
IDc2	LEED Accredited Professional	Rqd	Rqd	LEED AP during design and construction is required.
REGIONAL PRIORITY CREDITS (Version 3 only)				See paragraph LEED CREDITS COORDINATION.

PROJECT QUESTIONAIRE FOR LEED		
Building: BR80087 TISA Warehouse		02 FEB 12 Teleconference kick-off meeting
RECYCLING DURING BUILDING OPERATION		
LEED requires each building to have dedicated space for the collection and storage of recyclables. As a minimum each facility must accommodate recycling of these five items: paper, glass, plastic, metal and corrugated cardboard. Recycling must be coordinated with the building occupant and the building design must provide facilities and spaces that are suitable for the anticipated recycling requirements of the building occupant.		
1	Who will remove trash and recyclables from the individual building spaces?	User
2	Who will remove trash and recyclables from the building?	User
3	Will the facility be served by a recyclables collection service?	Only cardboard/paper dumpster
3A	Will they come weekly?	Will come when called
3B	Does the service pick up commingled recyclables or do they require items to be sorted?	Except for paper and cardboard, User carries recyclables to DPW recycling facility where they are sorted.
4	Do we need to provide an outside pick-up area for recyclables or assume the service come in the building for pick-up?	Need to provide an area for a cardboard/paper dumpster.
4A	Location of pick-up area	Co-locate with trash dumpster.
4B	Size of pick-up area	
4C	Size of receptacle(s)	Assume same size as dumpster?
5	For the following recyclables, what spaces will generate them and will there be significant volume generated in a week? Items in parentheses are most common sources.	
5A	Paper (office - receptacle at photocopier)	
5B	Glass (food service)	
5C	Metal (receptacle at vending)	
5D	Plastic (receptacle at vending)	
5E	Cardboard (boxed items shipped to facility - central collection room)	significant amount - dumpster
5F	Other (pallets, cooking oil, POL)	significant amount - will need pallet storage area on site
6	Are there any special equipment needs for recyclables storage and handling (box crusher)?	
SMOKING POLICY PROVISIONS		
LEED requires signage at each building and site indicating the smoking policy. Smoking is prohibited in all federal workplaces and within 50 feet of all building entries.		
7	Wil there be a designated smoking area on the site or will smoking be prohibited on the site?	designated area
7A	Desired location of, amenities at designated smoking area:	No amenities

APPENDIX M
LEED Owner Requirements

Owner's Project Requirements Document for Commissioning

Project: General Purpose (TISA) Warehouse, Fort Bragg, NC, PN 80087, FY12

Approved:

_____	_____	_____
Name	Owner's Representative	Date
_____	_____	_____
Name	Design Agent's Representative	Date

Overview and Instructions

The purpose of this document is to provide clear and concise documentation of the Owner's goals, expectations and requirements for commissioned systems, and shall be utilized throughout the project delivery and commissioning process to provide an informed baseline and focus for design development and for validating systems' energy and environmental performance.

The Owner's Project Requirements Document is a required document for LEED-NC EA Prerequisite Fundamental Commissioning of the Building Energy Systems. It shall be completed by the Corps District/Design Agent based on coordination with the Installation/User/Proponent and shall be approved by the Installation/User/Proponent representative.

The intent of the Owner's Project Requirements Document is to detail the functional requirements of a project and the expectations of the building's use and operation as it relates to commissioned systems. This template contains the basic recommended components indicated in the LEED Reference Guide. It should be adapted as needed to suit the project, remaining reflective of the LEED intent.

The Owner's Project Requirements Document should ideally be completed before the start of design and furnished to the design team. As a minimum it will be developed by the Designer of Record based on coordination with the Installation/User/Proponent during design development. For LEED Enhanced Commissioning it must be reviewed by the Commissioning Authority during design phase prior to the midpoint of design. It must be completed prior to the approval of Contractor submittals of any commissioned equipment or systems.

Updates to the Owner's Project Requirements Document throughout the course of project delivery shall be made by the Corps District/Design Agent based on decisions and agreements coordinated with and agreed to by the Installation/User/Proponent.

The Owner's Project Requirements Document shall be included in the project's LEED documentation file under EA PR1, Fundamental Commissioning of the Building Energy Systems.

Owner's Project Requirements Document for Commissioning

Table of Contents

1. Owner and User Requirements
   - Primary Purpose, Program and Use
   - Project History
   - Broad Goals
2. Environmental and Sustainability Goals
   - Energy Efficiency Goals
   - General
   - Siting
   - Building Façade
   - Building Fenestration
   - Building Envelope
   - Roof
   - Other
3. Indoor Environmental Quality Requirements
   - Intended Use
   - Occupancy Schedule
   - Accommodations for After-Hours Use
   - Lighting, Temperature, Humidity, Air Quality, Ventilation, Filtration
   - Acoustics
   - Occupant Ability to Adjust System Controls
   - Types of Lighting
4. Equipment and Systems Expectations
   - Space Heating
   - Ventilation
   - Air Conditioning
   - Refrigeration
   - HVAC Controls
   - Domestic Hot Water
   - Lighting Controls
   - Daylighting Controls
   - Emergency Power
   - Other
5. Building Occupant and O&M Personnel Requirements
   - Facility Operation
   - EMCS
   - Occupant Training and Orientation
   - O&M Staff Training and Orientation

TABLE 1

1. *Owner and User Requirements*

What is the primary purpose, program and use of this project? (example: office building with data center)

Describe pertinent project history. (example: standard design development)

This project replaces a facility that was damaged beyond repair by a tornado in 2010.

Broad Goals

What are the broad goals relative to program needs?

_____
_____
_____

What are the broad goals relative to future expansion?

_____
_____
_____

What are the broad goals relative to flexibility?

A clearspan structure with no interior columns is desired.

What are the broad goals relative to quality of materials?

(Army) Buildings with a 25-year useful design life before a possible re-use/re-purpose or renovation requirement, to include normal sustainment, restoration, modernization activities and a 50-year building replacement life. Provide an appropriate level of quality to ensure the continued use of the facility over that time period with the application of reasonable preventive maintenance and repairs that would be industry-acceptable to a major civilian sector project owner. The site infrastructure will have at least a 50-year life expectancy with industry-accepted maintenance and repair cycles.

What are the broad goals relative to construction costs?

(Army) Obtain full scope award within funds available.

What are the broad goals relative to operational costs?

(Army) Reasonable preventive maintenance and repairs that would be industry-acceptable to a major civilian sector project owner.

Other broad goals: *(Insert as applicable)*

_____
_____
_____

2. *Environmental and Sustainability Goals*

What are the project goals relative to sustainability and environmental issues? (example: LEED Silver rating)

(Army) Meet federal High Performance Sustainable Buildings (2008) (HPSB) requirements and achieve at least Silver level using current version of LEED-NC with at least 40% of the LEED points earned from energy and water efficiency features.

What are the project goals relative to energy efficiency?

(Army) Minimum 40% energy use reduction, excluding process loads, using ASHRAE 90.1 2007 baseline. 50% reduction is desired if can be achieved within funds available.

What are the project goals and requirements for building siting that will impact energy use?

(Army) Orient building for optimum energy efficiency (long axis oriented east-west) and for future provision of photovoltaic panels at optimum orientation when possible within the constraints of the functional requirements and site boundary limits.

What are the project goals and requirements for building facade that will impact energy use?

_____
_____
_____

What are the project goals and requirements for building fenestration that will impact energy use?

All openings must meet federal antiterrorism standards (amount of fenestration, frame strength and mounting, laminated glass). Vegetative or structural shading of fenestration to optimize energy efficiency is desired when feasible. Achievement of HPSB daylighting requirement/LEED Daylighting credit is desired except where precluded by other project requirements._____
_____
_____

What are the project goals and requirements for building envelope that will impact energy use?

(Army) A continuous air barrier is required to control air leakage into or out of conditioned spaces. The air barrier materials must have an air permeance not to exceed 0.004 cfm/sf at 0.3”wg (0.02 L/sm2@75Pa) when tested in accordance with ASTM E2178. Join and seal the air barrier material of each assembly in a flexible manner to allow relative movement of assemblies and components. Clearly identify all air barrier components of each envelope assembly and detail the joints, interconnections and penetrations of the air barrier components in the construction documents. Clearly identify the boundary limits of the building air barriers and of the zone or zones to be tested on the drawings. Develop an Air Barrier Quality Assurance Plan that assures a competent air barrier inspector inspects the critical components prior to their being concealed. At a minimum three on-site inspections are required during construction. Test the completed building in accordance with ASTM E 779 (2003) or ASTM E 1827-96 (2002) and with infrared thermography in accordance with ISO 6871:1983 and ASTM C1060-90(1997) and demonstrate the air barrier leakage rate of the building envelope does not exceed 0.25cfm/sf at a pressure differential of 0.3wg (75 Pa).

What are the project goals and requirements for building roof that will impact energy use?

(Army) Use a cool roof in climate zones 1, 2 and 3 except where in conflict with other mission or functional requirements (i.e. visual obstruction at airfield flight path). _____
_____
_____

Other: *(Insert as applicable)*

(Army) No use of potable water for landscape irrigation. Any permanent irrigation system provided must utilize nonpotable water.

(Army) On-site stormwater management to maintain or restore predevelopment hydrology using Low Impact Development (LID) best management practices to the maximum extent technically feasible within project budget and site constraints. Predevelopment hydrology is defined by OSD as the pre-project hydrologic conditions of temperature, rate, volume and duration of storm water flow from the project site.

(Army) Indoor potable water use reduction of at least 30% using EPACT 1992 fixture performance baseline.

(Army) Building with average daily non-industrial hot water requirement of 50 gallons or more and located in areas receiving an annual average solar radiation of 4kWh/sm/day or more: Provide a minimum of 30% of the building's hot water demand by solar water heating._____

_____

_____

3. Indoor Environmental Quality Requirements

What is the intended use for all spaces? For all spaces that have an intended use that is not readily apparent from the space name, provide this information in Table 1.

_____

_____

_____

What is the anticipated occupancy schedule (numbers of occupants and time frames) for all occupied spaces? Indicate the default occupancy schedule below and for all spaces that have an occupancy schedule that differs from the default, provide this information in Table 1.

_____

What accommodations for after-hours use are required? (example: access control, lighting controls, HVAC controls) Indicate general accommodations required below and for all spaces that have special requirements, provide this information in Table 1.

See the Scope of Work of the RFP _____

_____

_____

What are the lighting, temperature, humidity, air quality, ventilation and filtration requirements for all spaces? Indicate the default requirements below and for all spaces that have a requirement that differs from the default, provide this information in Table 1.

Lighting: _____

Temperature: (ASHRAE 55 2004) _____

Humidity: (ASHRAE 55 2004) _____

Air Quality: See the Scope of Work of the RFP _____

Ventilation: (ASHRAE 55 2004 , ASHRAE 62.1 2007) _____

Filtration: (LEED EQ5) Minimum MERV 13 in all regularly occupied areas of mechanically ventilated building (both return and outside air) _____

What are the acoustical requirements for all spaces? Indicate the default acoustical requirements below and for all spaces that have a requirement that differs from the default, provide this information in Table 1.

See the Scope of Work of the RFP _____
_____
_____

What is the desired level of occupant ability to adjust systems controls? Indicate the default desired levels below and for all spaces that have a desired level that differs from the default, provide this information in Table 1.

Lighting: _____

Temperature: See the Scope of Work of the RFP _____
Humidity: No Occupant Adjustment _____
Air Quality: No Occupant Adjustment _____

Ventilation: No Occupant Adjustment _____

What, if any, specific types of lighting are desired? (example: fluorescent in 2x2 grid, accent lighting, particular lamps)

_____
_____
_____

4. Equipment and System Expectations

(Complete for each category as applicable or indicate "none identified" or "N/A". Add desired features information for other anticipated commissioned systems as applicable)

Indicate desired features for the following commissioned system: Space Heating

Desired Type: None Identified _____

Quality: _____

Reliability: _____
Automation: See the Scope of Work of the RFP _____

Flexibility:_____
Maintenance Requirements: See the Scope of Work of the RFP _____
Efficiency Target: See the Scope of Work of the RFP _____

Desired Technologies: None Identified _____

Indicate desired features for the following commissioned system: Ventilation

Desired Type: None Identified _____

Quality: _____

Reliability: _____
Automation: See the Scope of Work of the RFP _____

Flexibility:_____
Maintenance Requirements: See the Scope of Work of the RFP _____
Efficiency Target: See the Scope of Work of the RFP _____

Desired Technologies: See the Scope of Work of the RFP _____

Indicate desired features for the following commissioned system: Air Conditioning

Desired Type: None Identified _____

Quality: _____

Reliability: _____
Automation: See the Scope of Work of the RFP _____

Flexibility:_____
Maintenance Requirements: See the Scope of Work of the RFP _____
Efficiency Target: See the Scope of Work of the RFP _____

Desired Technologies: None Identified _____

Indicate desired features for the following commissioned system: Refrigeration

Desired Type: None Identified _____

Quality: _____

Reliability: _____
Automation: See the Scope of Work of the RFP _____

Flexibility:_____
Maintenance Requirements: See the Scope of Work of the RFP _____
Efficiency Target: See the Scope of Work of the RFP _____

Desired Technologies: None Identified

Indicate desired features for the following commissioned system: HVAC Controls

Desired Type: See the Scope of Work of the RFP _____

Quality: _____

Reliability: _____
Automation: See the Scope of Work of the RFP _____

Flexibility:_____
Maintenance Requirements: _____
Efficiency Target: _____

Desired Technologies: See the Scope of Work of the RFP _____

Indicate desired features for the following commissioned system: Domestic Hot Water

Desired Type: None Identified _____

Quality: _____

Reliability: _____
Automation: See the Scope of Work of the RFP _____

Flexibility:_____
Maintenance Requirements: See the Scope of Work of the RFP _____
Efficiency Target: See the Scope of Work of the RFP _____

Desired Technologies: See the Scope of Work of the RFP _____

Indicate desired features for the following commissioned system: Lighting Controls

Desired Type: _____

Quality: _____

Reliability: _____
Automation: _____

Flexibility:_____
Maintenance Requirements: _____
Efficiency Target: _____

Desired Technologies: _____

Indicate desired features for the following commissioned system: Daylighting Controls

Desired Type: _____

Quality: _____

Reliability: _____
Automation: _____

Flexibility:_____
Maintenance Requirements: _____
Efficiency Target: _____

Desired Technologies: _____

Indicate desired features for the following commissioned system: Emergency Power

Desired Type: _____

Quality: _____

Reliability: _____
Automation: _____

Flexibility:_____
Maintenance Requirements: _____
Efficiency Target: _____

Desired Technologies: _____

Indicate desired features for the following commissioned system: Other _____

Desired Type: _____

Quality: _____

Reliability: _____
Automation: _____

Flexibility:_____
Maintenance Requirements: _____
Efficiency Target: _____

Desired Technologies: _____

5. Building Occupant and O&M Personnel Requirements

How will the facility be operated? Who will operate the facility?

See the Scope of Work of the RFP _____
_____
_____

Will the facility be connected to an EMCS? If so, what are the interface requirements? (example: monitoring points, control points, scheduling)

See the Scope of Work of the RFP _____
_____
_____

What is the desired level of training and orientation for building occupants to understand and use the building systems?

See the Scope of Work of the RFP _____
_____
_____

What is the desired level of training and orientation for O&M staff to understand and maintain the building systems?

See the Scope of Work of the RFP _____
_____
_____

Table 1

Space	Use / Activity	Num of Occs	Special Occupancy Schedule	After Hours Use Reqmt.	Special Cooling Reqmt.	Special Heating Reqmt.	Special Humidity Reqmt.	Special Ventil./Filtration Reqmt.	Special Acoustic Reqmt.	Special Lighting Reqmt.	Special Occup Adjustability Reqmt.

SECTION 01 91 00

COMMISSIONING
11/11

PART 1 GENERAL

1.1 REFERENCES

The references below form a part of this specification to the extent referenced. The publications are referred to within the text by basic designation only.

AMERICAN SOCIETY OF HEATING, REFRIGERATING AND AIR-CONDITIONING ENGINEERS (ASHRAE)

ASHRAE Guideline 0	(2005) The Commissioning Process
ASHRAE Guideline 1.1	(2007) The HVAC Commissioning Process
ASHRAE 189.1	(2009) Standard for the Design of High-Performance Green Buildings except Low-Rise Residential Buildings

UNITED STATES GREEN BUILDING COUNCIL (USGBC)

LEED	(2009) Leadership in Energy and Environmental Design rating tool for New Construction
LEED Reference Guide	(2009) LEED Reference Guide for Green Building Design and Construction

1.2 DEFINITIONS

a. "Basis of design" is the documentation of the primary thought processes and assumptions behind design decisions that were made to meet the design intent. The basis of design describes the systems, components, conditions and methods chosen to meet the intent.

b. "Commissioning (Cx)" is a comprehensive and systematic process to verify that the building systems perform as designed to meet Government requirements and the design intent.

c. The "Commissioning Plan" (Cx Plan) is an overall plan that provides the structure, schedule and coordination planning for the Cx process.

d. "Data logging" records data such as flows, currents, status, and pressures over time using stand-alone data loggers separate from the control system.

e. "Deferred functional tests" are performed after substantial completion, due to partial occupancy, equipment, seasonal requirements, design, or other site conditions that disallow the test from being performed before substantial completion.

f. A "deficiency" is a condition in the installation or function of a component, piece of equipment, or system that is not in compliance with

the Contract documents.

g. The "design intent" represents the ideas, concepts, and criteria that are conveyed through the Contract documents.

h. "Factory testing" tests equipment on-site or at the factory by factory personnel.

i. A "functional performance test" (FPT) tests the dynamic function and operation of equipment and systems under full operation using manual (direct observation) or monitoring methods. For example, the chiller pump is tested interactively with the chiller functions to see if the pump ramps up and down to maintain the differential pressure setpoint.

j. "Indirect indicators" indicate a response or condition, such as a reading from a control system screen reporting a damper to be 100 percent closed.

k. A "manual test" uses hand-held direct reading instruments, immediate control system readouts, or direct observation to verify performance (contrasted to analyzing monitored data taken over time to make the observation).

l. "Nonconformance" means a piece of equipment or a system does not perform properly or comply with the design intent.

m. An "overwritten value" is a sensor value in the building control system that is overridden to see the response of a system. For example, changing the outside air temperature value from 50 degrees F to 75 degrees F to verify economizer operation. See also "simulated signal."

n. Owner's Project Requirements (OPR) is a written document that details the functional requirements of the project and the expectations of how it will be used and operated.

o. "Phased commissioning" is completed in phases (by floors or buildings, for example) due to the size of the structures or other scheduling issues, in order to minimize the total construction time.

p. A "prefunctional test checklist" (PFT checklist) is a list of items to inspect and elementary component tests to conduct to verify proper installation of equipment. Prefunctional tests (PFTs) are primarily static inspections and procedures to prepare the equipment or system for initial operation (e.g., belt tension, oil levels OK, labels affixed, gages in place, sensors calibrated). However, some PFT checklist items entail simple testing of the function of a component, a piece of equipment or system (such as measuring the voltage imbalance on a three phase pump motor of a chiller system). PFT checklists augment and are combined with the manufacturer's startup checklist.

q. "Sampling" functionally tests only a fraction of the total number of identical or near identical pieces of equipment.

r. "Seasonal performance tests" are FPTs that are deferred until the system(s) will experience conditions closer to their design conditions.

s. "Simulated conditions" are created conditions for the purpose of testing the response of a system (e.g., applying a hair blower to a space sensor to see the response in a VAV box).

t. A "simulated signal" uses a signal generator to send an amperage, resistance or pressure to the transducer and DDC system to simulate a sensor value.

u. "Startup" includes the initial starting or activating of dynamic equipment after executing PFTs.

v. "Test requirements" specify what modes, functions, and conditions shall be tested. The test requirements are not the detailed test procedures. The test requirements are specified in the individual sections of the Contract documents.

w. "Trending" uses the building control system for monitoring.

x. The "warranty period" involves the entire project, including equipment components. Warranty begins at substantial completion and extends for at least 1 year, unless specifically noted otherwise in the Contract documents and accepted submittals.

1.3 DESCRIPTION

The Fundamental Cx process shall encompass and coordinate system documentation, equipment startup, control system calibration, testing and balancing, performance testing, and training. Fundamental Cx shall be completed before substantial completion. Enhanced Cx continues into the warranty period with post-occupancy verification of performance. Cx does not take away from or reduce the responsibility of the Contractor to provide a finished and fully functioning product.

1.3.1 Applicable Criteria

All work shall conform to the following:

a. LEED Reference Guide

b. ASHRAE Guideline 0

c. ASHRAE Guideline 1.1 with the following exception: sampling techniques are not allowed for HVAC systems. 100 percent of the HVAC systems and their controls are required to be commissioned.

d. ASHRAE 189.1, paragraphs 10.3.1.1 Building Acceptance Testing and 10.3.1.2 Building Project Commissioning

1.3.2 Commissioning Agent (CA)

The CA will be provided by the Government. All submittals and correspondence for the CA shall be submitted to the CA through the Contracting Officer's Representative (COR). Descriptions of tasks and products provided by the Government CA are included in this section for Contractor information and coordination purposes.

1.3.3 LEED

Project shall meet the requirements for LEED Energy & Atmosphere (EA) Prerequisite 1, Fundamental Commissioning and EA Credit 3, Enhanced Commissioning.

1.3.4 Process

The following activities outline the Cx tasks and the general order in which they occur. The Commissioning Agent (CA) shall coordinate all activities.

a. Review construction documents, basis of design and design intent documents prepared by Designer of Record (DOR).

b. Conduct a scoping meeting to review the Cx process with the Cx team members.

c. Develop a Cx Plan.

d. Schedule additional meetings throughout construction with necessary parties attending, to plan, scope, coordinate, schedule future activities, and resolve problems.

e. Collect equipment documentation during normal submittals, including detailed startup procedures.

f. Review submittals.

g. Develop startup plans, startup documentation formats, and PFTs to be completed prior to startup.

h. Perform startup and initial checkout.

i. Develop and execute FPT procedures.

j. Correct items of nonconformance in materials, installation, or setup and retest the system.

k. Document deficiencies and their resolution.

l. Review documentation for completeness.

m. Complete and submit the Final Cx Report.

n. Review, pre-approve and coordinate Government personnel training and verify completion.

o. Perform deferred testing as specified and required, including unforeseen deferred tests, seasonal testing and short-term diagnostic testing.

p. Complete and submit the Systems Manual.

q. Perform end-of-warranty review.

1.3.5 Written Work Products

The Cx process generates a number of written work products. The Cx Plan shall list all the formal written work products, describe briefly their contents (including specification references as applicable), who is responsible to create them, their due dates and who receives and approves them. In summary, the written products are:

Product	Developed By

Design document review	CA
Draft and Final Cx Plan	CA
Meeting minutes	Contractor (CTR)
Cx schedules	CTR, CA, Contracting Officer's Representative (COR)
Equipment documentation submittals	CTR
Sequence clarifications	CTR
PFT checklists	CA with CTR assistance
Startup and initial checkout plan	CTR, CA compiles existing documents
Completely filled out startup, initial checkout, and PFT forms and checklists	CTR
TAB Plan	CTR with CA review
Final TAB report	CTR with CA review
Commissioned systems issues log (deficiencies)	CA
Cx Progress Record	CA
Commissioned systems deficiency reports	CA
FPT forms	CA with CTR assistance
Completely filled out FPT forms	CA
O&M Manual	CTR
Systems Manual	CA with CTR assistance
Cx record book	CA
Training Plan	CTR, CA, COR
Specific training agendas	CTR
Final Cx Report	CA
Miscellaneous approvals	COR

1.4 SUBMITTALS

Government approval is required for submittals with a "G" designation; submittals not having a "G" desgination are for information only. When used, a designation following the "G" designation identifies the office that will review the submittal for the Government. The following shall be submitted in accordance with Section 01 33 00 SUBMITTAL PROCEDURES:

SD-02 Shop Drawings

Control Drawings

SD-06 Test Reports

Completed functional test readiness forms; G, CA

Completed PFT checklists; G, CA

Completed startup tests checklists; G, CA

SD-07 Certificates

Calibration documentation

Calibration certification

SD-08 Manufacturer's Instructions

Startup and Checkout Plan

Controls Initial Checkout

Test Procedures

SD-10 Operation and Maintenance Data

Training Plan; G, CA

Training Documentation

SD-11 Closeout Submittals

Systems Manual; G, RO

1.5 QUALITY ASSURANCE

1.5.1 Responsibilities

Perform all Commissioning work specified herein and in related sections under the direct guidance of the Commissioning Agent.

1.6 SYSTEMS TO BE COMMISSIONED

The following equipment and systems shall be commissioned in accordance with the procedures described in this section.

a. Heating, Ventilating, Air Conditioning, and Refrigeration Systems (HVAC&R) Systems (mechanical and passive) and associated controls
b. Indoor Air Quality (IAQ) systems and associated controls
c. Interior and exterior lighting, daylighting and shading controls including automatic controls and occupancy sensors
d. Plumbing and domestic hot water systems including solar water heating]
e. Domestic and process water pumping and mixing systems
f. Building envelope including thermal and moisture integrity and air tightness]
g. Storm water management systems
h. Irrigation systems that use collected storm water
i. Communications systems (data and telephone)
j. Renewable energy systems
k. Water treatment systems
l. Central energy plant
m. Steam generation/chilled water systems
n. Bio-mass generation
o. Fuel cell generation
p. EMCS/UMCS systems

1.7 COORDINATION

1.7.1 Commissioning Team

The members of the Cx team shall consist of the CA, the Contractor, the COR, subcontractors, QC Specialists, Designers of Record (under construction period services contract with the Government) and Government representative(s) including operation and maintenance (O&M) staff. All members shall work together and with vendors to fulfill their contracted responsibilities and meet the objectives of the Contract documents and Cx process. The CA shall regularly communicate with all members of the Cx

team, keeping them apprised of Cx progress and scheduling changes through memos, progress reports, or other methods of communication.

1.7.2 Cx Schedule

The CA shall work with the Contractor and the COR to schedule the Cx activities. The CA shall provide the initial schedule of primary events at the Cx scoping meeting. The Draft Cx Plan shall provide a format for this schedule, and both shall be submitted together. The CA shall provide sufficient notice to the Contractor and the COR for scheduling Cx activities. The Contractor shall integrate all Cx activities into the master schedule. As construction progresses the CA shall update the Cx schedule with more details. Notify the Contracting Officer and CA ahead of time when Cx activities not yet performed or not yet scheduled will impact the construction schedule.

1.7.3 Meetings

1.7.3.1 Scoping Meeting

The Cx scoping meeting shall be scheduled by the CA within 90 days of award of the construction Contract. The CA shall plan and conduct the Cx scoping meeting with the entire Cx team in attendance (attendance by conference call is acceptable). Meeting minutes shall be distributed to all parties within one week. The agenda shall include a review of each building system to be commissioned, including its intended operation, Cx requirements, and completion and startup schedules. The scope of work, tasks, schedules, deliverables, and responsibilities for implementation of the Cx Plan shall be established. Information gathered from this meeting will allow the CA to update the Cx Plan, which shall also be distributed to all parties.

1.7.3.2 Miscellaneous Meetings

Other meetings will be planned and conducted by the CA as construction progresses. These meetings will cover coordination, deficiency resolution, and planning issues. These meetings shall be held monthly, until the final three months of construction when they shall be held weekly. Attendance by conference call is acceptable. Cx shall also be discussed in all weekly progress meetings.

1.8 RESPONSIBILITIES

The responsibilities of various parties in the Cx process are as specified. The COR and CA are not responsible for construction means, methods, job safety, or management function related to Cx on the job site.

1.8.1 CA Responsibilities

The CA is responsible for writing and verification of compliance with the Cx Plan and the preparation of Cx checklists and reports. This shall involve coordinating and directing the Cx activities in a logical, sequential, and efficient manner using consistent protocols and forms, centralized documentation, clear and regular communications and consultations with all necessary parties, frequently updated timelines and schedules, and technical expertise. All submittals applicable to systems being commissioned shall be reviewed and evaluated by the CA for compliance with Cx needs and the Contract documents. The CA shall ensure proper coordination and submission of all documents. During construction, the CA shall perform site visits as necessary to observe component and system

installations; attend selected planning and job-site meetings to obtain information on construction progress (attendance by conference call is acceptable); review construction meeting minutes for potential revisions or substitutions related to the Cx process; and assist in resolving any discrepancies.

1.8.2 Contractor Responsibilities

The Contractor shall include and itemize the cost of Cx in the contract price, including but not limited to the cost of sheaves and belts that may be required by testing, adjusting, and balancing (TAB). In each purchase order or subcontract written, requirements for submittal data, Cx documentation, O&M data, and training shall be included. During construction, the Contractor shall maintain as-built red-line drawings for all drawings and final CAD as-builts for contractor-generated coordination drawings. These drawings shall be updated after completion of Cx (excluding deferred testing).

1.9 COMMISSIONING PLAN

The CA shall develop a Draft Cx Plan to identify how Cx activities will be integrated into general construction and trade activities. The Plan shall identify how Cx responsibilities are distributed. The Cx Plan shall include the following components:

a. A brief overview of the Cx process, including goals, objectives, and general project information.

b. A list of systems to be commissioned.

c. Identification of Cx participants and responsibilities, including applicable excerpts from approved Construction Quality Control (CQC) Plan.

d. A description of the management, communication, and reporting of the Cx Plan.

e. An outline of the Cx process scope including:

1. Documentation of basis of design and design intent (prepared by DOR and obtained from the Government).

2. Startup and testing procedures, including sampling procedures and applicable excerpts from CQC Plan.

3. Observation procedures, highlighting the requirements for verification of the correct installation of all systems and including applicable excerpts from CQC Plan.

4. System performance verification.

5. Submittal review procedures, including applicable excerpts from CQC Plan.

6. O&M documentation describing the information to be provided to the Government as required by Section 01 78 23 OPERATION AND MAINTENANCE DATA.

7. Training activities, including applicable excerpts from CQC

Plan.

8. Warranty period activities.

f. A list and description of the written work products, as specified in the paragraph Written Work Products.

g. An activity schedule.

h. A description of the rigor, scope, and procedures of testing and acceptance, including applicable excerpts from CQC Plan.

The Draft Cx Plan shall be submitted to the Contracting Officer before the scoping meeting. Within 30 days after the initial Cx scoping meeting the CA shall update and submit the Draft Cx Plan for Contracting Officer final review. The CA shall adjust the Draft Cx Plan as required and submit as the Final Cx Plan prior to commencement of work. The Final Cx Plan shall include specific scheduling of required testing procedures for commissioned equipment and systems. Changes to the Cx test procedures and scheduling after approval of final Cx Plan during construction will be documented in the Cx Report.

1.10 COMMISSIONED EQUIPMENT DATA

The CA shall request in writing from the Contractor specific information needed about each piece of commissioned equipment or system to fulfill requirements of the Cx Plan, and shall review and evaluate this information for compliance with Cx needs, in accordance with this section and Section 01 33 00 SUBMITTAL PROCEDURES. This information shall include normal cut sheets; addenda; change orders; full details of any required testing; full factory testing reports, if any. In addition, the installation, startup, and checkout materials that are shipped inside the equipment and the actual field checkout forms to be used by the factory or field technicians shall be submitted and reviewed by the CA. The CA may request further documentation as necessary for the Cx process. Any request for additional data shall be made through the Contracting Officer's Representative and prior to receipt of normal submittal data from equipment manufacturers. This information is to be used in the Cx process prior to the regular formal O&M manual submittals, and shall be compiled and maintained in the O&M manuals and Systems Manual.

1.11 REPORTING

The CA shall provide Cx schedule and progress reports monthly to the Contracting Officer and Cx team, with increasing frequency as construction and Cx progress. Sample standard forms shall be provided and referenced in the Cx Plan. Testing or review approvals and nonconformance and deficiency reports shall be made regularly.

1.11.1 Final Cx Report

The CA shall compile a Final Cx Report focusing on evaluating Cx process issues, and provide four hard copies plus two electronic copies to the Contracting Officer within 30 days after completion of all FPTs. The report shall include an executive summary and shall summarize all of the tasks, findings, conclusions, and recommendations of the Cx process. A list of participants and roles, brief building description, overview of Cx and testing scope, and general description of testing and verification

methods shall be included. The CA shall provide the following for each piece of equipment:

a. Assessment of how the equipment meets the specifications and design intent.

b. PFT checklists, start-up tests and FPT forms.

c. O&M documentation evaluation.

d. Operator training evaluation.

e. Assessment of the value of the Cx process.

Specifically list all outstanding nonconformance items. Each nonconformance issue shall be referenced to the specific item where the deficiency is documented. List any uncorrected compromises in the environmentally responsive features. List recommendations such as improvements to equipment or operations, future actions including testing justified by seasonal conditions, or Cx process changes. Include a brief description of the verification method used and observations and conclusions from the testing of each piece of equipment. All acquired Cx documentation, including completed FPTs, logs, minutes, reports, deficiency lists, communications, findings, and unresolved issues, shall be compiled in appendices and provided with the Final Cx Report. A Commissioning Agent Certification Letter signed by the CA shall be included in the report, certifying the Cx Plan has been successfully executed and the design intent of the facility has been achieved.

1.11.2 Systems Manual

The CA shall develop an indexed systems manual to be submitted in both hard copy and electronic version with the Final Cx Report. The Systems Manual contains the following information, compiled into a single manual, regardless of repetition with the O&M manuals:

a. Final version of basis of design and design intent.

b. As-built sequences of operations for all equipment as provided by subcontractors, including time-of-day schedules and schedule frequency, control drawings, and detailed point listings with ranges and initial setpoints.

c. Ongoing operating instructions for all integrated building systems.

d. FPT results, blank test forms, and recommended schedule for ongoing testing.

e. Seasonal operational guidelines.

f. Recommendations for recalibration frequency of sensors and actuators by type and use.

g. Single line diagrams of each commissioned system.

h. Troubleshooting table for ongoing achievement of the design intent.

i. Guidelines for continuous maintenance of the design intent and basis of design.

PART 2 PRODUCTS

2.1 TEST EQUIPMENT

Equipment shall be maintained in good repair and operational condition throughout the duration of use on this project.

2.1.1 Equipment Provisions

The Contractor shall provide all test equipment necessary to perform startup and initial checkout and required FPT. Special equipment, tools and instruments available only from the vendor, specific to a piece of equipment, and required for testing equipment shall be turned over to the Government after testing has been completed, except for stand-alone data logging equipment. Data logging equipment and software required to test equipment shall not become the property of the Government.

2.1.2 Equipment Calibration

The Contractor is responsible for testing equipment calibration. All testing equipment shall be of sufficient quality and accuracy to test and measure system performance within the tolerances specified. Unless otherwise noted, the following minimum requirements apply. Temperature sensors and digital thermometers shall have a certified calibration within the past year to an accuracy of 0.9 degrees F and a resolution of plus or minus 0.2 degrees F. Pressure sensors shall have an accuracy of plus or minus 2.0 percent of the value range being measured (not the full range of the meter) and have been calibrated within the last year. All equipment shall be calibrated according to the manufacturer's recommended intervals and when dropped or damaged. Calibration tags shall be affixed or certificates readily available. Calibration documentation of all testing equipment shall be turned in with each testing episode. Serial numbers of equipment and standards used for QC, zeroing, and calibration shall be included.

PART 3 EXECUTION

3.1 STARTUP AND PREFUNCTIONAL CHECKOUT

Each piece of equipment or system to be commissioned shall receive a full prefunctional checkout. No sampling strategies shall be used. Equipment shall not be temporarily started for Cx.

3.1.1 Responsibilities

The Contractor has startup responsibility and shall complete systems and subsystems so they are fully functional and meeting the design objectives of the Contract documents. Start-up of equipment shall not occur until PFT are completed and the checklists have been approved by the CA. The Cx procedures and FPT do not relieve or lessen this responsibility or shift that responsibility partially to the CA or the Government. Parties responsible for PFT execution and startup shall be identified in the Cx scoping meeting and in the PFT checklists.

3.1.2 PFT Checklists and Startup Plan

The Contractor shall assist the CA in developing the PFT checklists. The manufacturer and Contractor shall develop the detailed startup plans for

all equipment. The primary role of the CA in this process is to ensure that there is written documentation that each of the manufacturer-recommended procedures have been completed.

3.1.2.1 PFT Checklists

The PFT checklists shall indicate required procedures to be executed to verify the systems are ready for start-up. The PFT checklists shall be finalized by the CA 2 weeks minimum prior to PFTs being performed. The Contractor shall determine which trade is responsible for executing and documenting each of the line item tasks and note that trade on the PFT checklists. Each task may have more than one trade responsible for its execution.

3.1.2.2 Startup Plan

The Contractor shall develop the full startup plan and submit the plan to the CA for review and approval. The CA shall review and evaluate the procedures and the procedure documentation format, noting any procedures that need to be revised or added. The plan shall contain a minimum of the following:

a. The manufacturer's standard written startup procedures copied from the installation manuals with check boxes by each procedure and a summary statement with a signature block added at the end.

b. The manufacturer's field checkout sheets.

3.1.3 Execution of PFTs

Two weeks prior to PFT, the Contractor shall schedule PFT activities with the Contracting Officer and CA. The Contractor shall execute the PFTs of all equipment and systems defined in the commissioning plan. The CA may attend the PFTs. The Contractor shall fill out the PFT checklists and submit the completed checklists to the CA for review and approval.

3.1.4 Execution of Startup

Two weeks prior to startup, the Contractor shall schedule startup and checkout activities with the Contracting Officer and CA. Prior to start-up of all commissioned equipment the pre-functional checklists must be approved by the CA. The Contractor shall execute the start-up of all equipment and systems defined in the commissioning plan. The Contractor shall provide skilled technicians to execute starting of equipment and shall ensure that they are available and present during the agreed upon schedules and for sufficient duration to complete the necessary tests, adjustments, and problem-solving. The CA may attend the startup.

3.1.4.1 Startup Documentation

After startup completion, the Contractor shall provide the CA with a signed and dated copy of the completed startup checklists. Only individuals that have direct knowledge and witnessed that a line item task of the startup was actually performed shall initial or check that item off. Witnessing supervisors shall not fill out these forms.

3.1.5 Nonconformance and Approval in PFTs and Startup

The Contractor shall clearly list any outstanding items of the startup and

PFT procedures that were not completed successfully at the bottom of the applicable checklist or on an attached sheet. The completed checklist and any outstanding deficiencies shall be provided to the Contracting Officer and the CA within 2 days of test completion. The CA shall review the report and submit either a nonconformance report or an approval form to the Contracting Officer. The Contractor shall correct all areas that are deficient or incomplete in the checklists and tests in a timely manner, and shall notify the CA as soon as outstanding items have been corrected and resubmit an updated report and a Statement of Correction on the original nonconformance report. When satisfactorily completed, the CA shall recommend approval of the execution of the PFTs and startup of each system to the Contracting Officer using a standard form. Contractor shall notify CA 2 weeks minimum prior to any re-inspection and get approval from the CA prior to starting re-inspection.

3.2 SENSOR AND ACTUATOR CALIBRATION

Contractor shall calibrate all field-installed temperature, relative humidity, CO2 and pressure sensors and gages, and actuators (dampers and valves) on all equipment. Test instruments shall have had a certified calibration within the last 12 months. Sensors installed in the unit at the factory with calibration certification provided need not be field calibrated. Procedures used shall be fully documented on the PFT checklists or other suitable forms, along with written documentation of initial, intermediate and final results.

3.2.1 Calibration Methods

Alternate methods may be used, if approved by the Government beforehand.

3.2.1.1 All Sensors

The Contractor shall verify that all sensor locations are appropriate and away from causes of erratic operation. Verify that sensors with shielded cables are grounded only at one end. For sensor pairs that are used to determine a temperature or pressure difference, verify they are reading within 0.4 degrees F of each other for temperature and within a tolerance of each other equal to two percent of the reading for pressure. Tolerances for critical applications may be tighter.

3.2.1.2 Sensors Without Transmitters

The Contractor shall make a reading with a calibrated test instrument within 6 inches of the site sensor. Verify that the sensor reading (via the permanent thermostat, gage, or building automation system (BAS)) is within the tolerances listed in the table below in paragraph Tolerances, Standard Applications of the instrument-measured value. If not, install offset in BAS, calibrate, or replace sensor.

3.2.1.3 Sensors With Transmitters

The Contractor shall disconnect sensor. Connect a signal generator in place of sensor. Connect ammeter in series between transmitter and BAS control panel. Using manufacturer's resistance-temperature data, simulate minimum desired temperature. Adjust transmitter potentiometer zero until 4 mA is read by the ammeter. Repeat for the maximum temperature matching 20 mA to the potentiometer span or maximum and verify at the BAS. Record all values and recalibrate controller as necessary to conform with specified control ramps, reset schedules, proportional relationship, reset relationship, and P/I reaction. Reconnect sensor. Make a reading with a calibrated test

instrument within 6 inches of the site sensor. Verify that the sensor reading (via the permanent thermostat, gage, or BAS) is within the tolerances listed in the table below in paragraph Tolerances, Standard Applications of the instrument-measured value. If not, replace sensor and repeat. For pressure sensors, perform a similar process with a suitable signal generator.

3.2.2 Tolerances, Standard Applications

Sensor Required Tolerance (+/-)
Cooling coil, chilled and condenser water temps 0.7 F
Flow rates, water 4% of design
Relative humidity 4% of design
AHU wet bulb or dew point 3.6 F
Combustion flue temps 9.0 F
Hot water coil and boiler water temp 2.7 F
Oxygen or CO2 monitor 0.1% pts
Outside air, space air, duct air temps 0.7 F
CO monitor 0.01% pts
Watt-hour, voltage & amperage 1% of design
Natural gas and oil flow rate 1% of design
Pressures, air, water and gas 3% of design
Steam flow rate 3% of design
Flow rates, air 10% of design
Barometric pressure 1.0 inch of Hg

3.2.3 Valve and Damper Stroke Setup and Check

3.2.3.1 EMS Readout

For all damper actuator positions checked, the Contractor shall verify the actual position against the BAS readout. Set pumps or fans to normal operating mode. Command damper closed, visually verify that damper is closed and adjust output zero signal as required. Command damper open, verify position is full open and adjust output signal as required. Command damper to three intermediate positions. If actual damper position does not reasonably correspond, replace actuator.

3.3 CONTROLS

Controls shall be tested and verified after PFT and startup and after sensor and actuator calibration, as specified in Section 23 09 23 DIRECT DIGITAL CONTROL FOR HVAC AND OTHER LOCAL BUILDNG SYSTEMS. The Contractor shall be responsible for Cx activities related to controls. Before initial startup, the Contractor shall gather and review the current control sequences and interlocks and with the CA write detailed testing procedures. All submittals indicated in Section 23 09 23 DIRECT DIGITAL CONTROL FOR HVAC AND OTHER LOCAL BUILDNG SYSTEMS shall be reviewed and approved by the CA.

3.4 TAB

TAB shall be completed after controls are tested, checked out, and adjusted. The Contractor shall be responsible for TAB preparation and activities, as specified in Section 23 05 93 TESTING, ADJUSTING, AND BALANCING FOR HVAC. All TAB submittals indicated in Section 23 05 93 TESTING, ADJUSTING, AND BALANCING FOR HVAC shall be reviewed and approved by the CA.

3.5 LIGHTING AND LIGHTING CONTROL SYSTEMS

3.5.1 General

Commissioning of lighting and lighting control systems shall comply with commissioning procedures of the Lighting Controls Association (LCA), available online at http://www.aboutlightingcontrols.org/education. Commissioning of lighting and lighting control systems shall not begin until the building envelope is enclosed; ceiling tiles, floor coverings, and window coverings are in place; lamps have completed a minimum 100-hour burn-in period; and the furniture is in place. 100 percent% of spaces shall be commissioned.

3.5.2 Performance Parameters and Commissioning Procedures

3.5.2.1 Lighting Controls

a. Lighting control commissioning shall verify that sensor type, quantity, placement, aiming, sensitivity, and time delay match the requirements of Section 26 51 00 INTERIOR LIGHTING.

b. Sensor delays shall be set to 15 minutes in classrooms and 10 minutes elsewhere, except wall-mounted sensor switches in small non-toilet spaces shall be set for 5 minutes.

c. Controlled spaces with automatic-on/automatic off controls shall detect an entering occupant within 3 feet of doorway and within 1 second of entry.

d. Controlled spaces with manual-on/automatic off controls shall operate as indicated.

e. Controlled spaces shall be tested for walking motion to verify the LED indicator lights on sensors detect properly. Lighting may be on for this test.

f. Controlled office, classroom, and conference room spaces shall be tested for hand motion to verify the LED indicator lights on sensors detect properly. Lighting may be on for this test.

g. Controlled spaces shall be tested for 100 percent occupancy sensor coverage.

h. Testing shall verify lighting within a controlled space is not triggered on by movement in adjacent work or traffic areas.

3.5.2.2 Lighting Control Panels

a. Verify channels are programmed as indicated on the Contract Drawings.

b. Verify channels are assigned to rooms/spaces as indicated on the Contract Drawings.

c. Verify auxiliary controls (e.g.,sensors and switches) operate as indicated on the Contract Drawings.

d. Verify auxiliary switch type, quantity, and placement.

e. Verify programming is PC-based and the software is installed and

functional.

f. Verify system warns occupants prior to sweeping off.

g. Verify switch override time duration.

h. Verify programming is not lost upon power failure.

i. Verify the lighting control panel communicates with the basewide energy system via the LonWorks BAS.

3.5.2.3 Exterior Lighting Photo Sensors

a. Test the photo sensor controls for exterior lights during the daytime when conditions are such that controls should be turning off electric lighting.

b. Verify that the fixture turns off during the daytime.

c. Verify that the fixture turns on when the photo sensor is completely covered.

d. Verify that the photo sensor is in an appropriate location for the lights being controlled and is not affected by direct sunlight or obstructions in a way that causes incorrect operation.

3.5.2.4 Dimming

a. Verify dimming in spaces with removable partitions operate autonomously when partitions are in place and operate together when partitions are removed.

3.6 AIR BARRIER SYSTEM

Air barrier system quality control, performance and testing requirements are as specified in Section 01 83 16 EXTERIOR ENCLOSURE PERFORMANCE REQUIREMENTS, located at http://en.sas.usace.army.mil/enweb. The Contractor shall prepare testing plans and checklists and coordinate them with CA.

3.7 FUNCTIONAL PERFORMANCE TESTING

The CA shall direct, witness, and document the FPT of all equipment and systems. The Contractor shall notify the CA and the COR a minimum of 2 weeks prior to start of functional tests and shall get approval from the CA prior to starting functional tests. Contractor shall also provide filled out functional test readiness forms prior to functional tests for approval. FPT forms will be finalized by the CA 2 weeks minimum prior to FPTs being performed. The Contractor shall execute the tests with skilled technicians provided under the direction of the CA. Systems shall be tested under all modes of operation (seasonal, occupied, unoccupied, warm-up, cool-down, full range of part- and full-load) and under abnormal modes and conditions (power failure, interlocks with other equipment, alarms, no flow, equipment failure). The Contractor shall verify that systems are run through all the building control system's sequences of operation, and components shall be verified to be responding as the sequences state. Systems shall not leak. The Contractor shall assist the CA to develop the FPT procedures in a sequential written form, and coordinate, oversee, and document the actual testing.

3.7.1 Development of Test Procedures

Before test procedures are completed, the Contractor shall provide to the CA all requested documentation regarding equipment sequence of operation and testing procedures, including procedures for equipment installed by factory representatives and a current list of change orders affecting equipment or systems. The change orders shall include an updated points list, program code, control sequences, and parameters. Using the testing parameters and requirements found in the technical sections of commissioned equipment and systems the CA shall develop specific test procedures and forms to verify and document proper operation of each piece of equipment and system. The Contractor shall assist the CA in clarifying the operation and control of commissioned equipment in areas where the specifications, control drawings, or equipment documentation is not sufficient for writing detailed testing procedures. Prior to execution, the CA shall provide the test procedures to the Contractor for review. The Contractor shall review to verify the test procedures for feasibility with installed equipment and programmed sequence of operation. The test procedure forms shall include the following, at a minimum:

a. System and equipment or component name(s) and configuration(s).
b. Equipment location and ID number.
c. Unique test ID number, and reference to unique PFT checklist and startup documentation ID numbers.
d. Date.
e. Project name.
f. Participating parties.
g. A copy of the section describing the test requirements.
h. A copy of the specific sequence of operations or other specified parameters being verified.
i. Formulas used in any calculations.
j. Required pre-test field measurements.
k. Instructions for setting up the test, including special cautions, alarm limits, or other equipment-specific information.
l. Specific step-by-step procedures to execute the test in a clear, sequential, and repeatable format.
m. Acceptance criteria of proper performance with a Yes / No check box to allow for clear marking of whether or not proper performance of each part of the test was achieved.
n. A section for comments.
o. Signature and date blocks for the CA, Contractor, and Contracting Officer.

3.7.2 Test Methods

3.7.2.1 Functional Performance

FPT and verification shall be achieved by manual testing or by monitoring the performance and analyzing the results using the energy management control system's trend log capabilities or by stand-alone data loggers. A combination of methods may be required to test the complete sequence of operations. The Contractor and CA shall determine which method, or combination of methods, is most appropriate for tests that do not have a method specified. The Contractor shall provide FPT of commissioned equipment and systems. The CA or Contracting Officer's representative shall analyze any functional performance trend logs and monitoring data to verify performance, and witness and evaluate manual FPTs performed by the Contractor. The Contractor shall assist the CA in interpreting the

monitoring data, as necessary.

3.7.2.2 Simulated Conditions

Simulating conditions (not by an overwritten value) shall be allowed only when timing the testing to experience actual conditions is not practical. Sensors, transducers, and devices shall have been calibrated before simulating conditions.

3.7.2.3 Overwritten Values

Overwriting sensor values to simulate a condition shall be allowed only when simulating conditions in other ways is not practical, and shall be used with caution. Sensors, transducers and devices shall have been calibrated before overwriting values.

3.7.2.4 Altering Setpoints

Altering setpoints to test a sequence is an acceptable alternative to overwriting sensor values when simulating conditions in other ways is not practical.

3.7.2.5 Indirect Indicators

Relying on indirect indicators for responses or performance shall be allowed only after visually and directly verifying and documenting, over the range of the tested parameters, that the indirect readings through the building control system represent actual conditions and responses. Much of this verification shall be completed during prefunctional testing.

3.7.2.6 Setup

Each function and test shall be performed under conditions that simulate actual conditions as close as possible. The Contractor shall provide materials, system modifications, and other necessities to produce the flows, pressures, temperatures, or other values necessary to execute the test according to the specified conditions. Where equipment requires integral safety devices to stop or prevent equipment operation unless minimum safety standards or conditions are met, FPT procedures shall demonstrate the actual performance of safety shutoffs in real or closely-simulated conditions of failure. At completion of the test, the Contractor shall return all affected building equipment and systems, due to these temporary modifications, to their pre-test conditions.

3.7.3 Coordination and Scheduling

FPT shall be performed after PFTs, startup, calibration, and TAB are complete for a given system. The CA shall schedule FPTs through the Contractor and Contracting Officer. Testing shall proceed from components to subsystems to systems; when the proper performance of all interacting individual systems has been achieved, the interface or coordinated responses between systems shall be checked.

3.7.4 Documentation, Review and Approval

The CA shall document the results of all FPTs using the specific test procedures and forms developed by the CA for that purpose. The CA shall validate that the testing requirements of this Contract are accomplished, and shall note each satisfactorily demonstrated function on the test form.

Formal approval of the FPT shall be made after witnessing or review by the Contracting Officer. The Contracting Officer shall give final approval on each test using the same form, and provide signed copies to the CA and the Contractor. The CA shall submit copies of the approved FPT forms with the O&M manual data and as part of the Cx Report.

3.8 NONCONFORMANCE

Every effort shall be made to expedite the testing process and minimize unnecessary delays, while not compromising the integrity of the procedures. The CA will not be pressured into overlooking deficient work or loosening acceptance criteria to satisfy scheduling or cost issues, unless there is an overriding reason to do so by direction from the Contracting Officer. Nonconformance and deficiencies observed in materials, installation, or operation shall be addressed immediately, in terms of notification to responsible parties, and providing recommended actions to correct deficiencies. The Contractor shall have responsibility for resolving construction deficiencies, and the CA shall assist with problem solving as necessary. If a design revision is deemed necessary and approved by the Contracting Officer, the designer shall have responsibility for providing design revision. The CA shall maintain a master deficiency and resolution log, and shall provide the Contracting Officer with written progress reports and test results with recommended actions.

3.8.1 Procedure

All deficiencies or nonconformance issues shall be noted and reported to the Contracting Officer and CA. The Contractor shall report in writing to the CA and Contracting Officer weekly, or at a minimum as often as Cx meetings are being scheduled, concerning the status of each apparent outstanding discrepancy identified during Cx. The report shall include explanations of any disagreements and proposals for their resolution, and a copy shall be included in the deficiency report and resolution record. Corrections of minor deficiencies may be made during the tests at the discretion of the CA, and the deficiency and resolution shall be documented on the test procedure form.

3.8.1.1 Non-Disputed Deficiencies

When a deficiency is identified, the CA shall discuss the issue with the Contractor. When there is no dispute on the deficiency and the Contractor accepts responsibility to correct it, the CA shall document the deficiency, the adjustments or alterations required to correct it, and the Contractor's response and intentions. The next test or sequence may then be performed. After the day's work, the CA shall submit all the nonconformance reports to the Contracting Officer for signature. Copies shall be provided to the Contractor and Contracting Officer. The Contractor shall correct the Deficiency and notify the CA and COR that the equipment is ready to be retested. The CA shall reschedule the test and the test shall be repeated as specified in the paragraph Retesting.

3.8.1.2 Disputed Deficiencies

If there is a dispute about a deficiency, regarding whether it is a deficiency or who is responsible, the deficiency shall be documented on the nonconformance form with the Contractor's response and a copy given to the Contracting Officer and Contractor. Resolutions shall be made at the lowest management level possible. Additional parties shall be brought into the discussions as needed. Final interpretive and acceptance authority is

with the Contracting Officer. The CA shall document the resolution process. Once the interpretation and resolution have been decided, the Contractor shall correct the deficiency, sign the statement of correction on the nonconformance form and provide it to the CA. The CA shall reschedule the test and the test shall be repeated as specified in the paragraph Retesting.

3.8.2 Retesting

The cost to retest a prefunctional test or FPT shall be solely the responsibility of the Contractor. Any required retesting by the Contractor shall not be considered a justified reason for a claim of delay or for a time extension by the Contractor. The CA or Contracting Officer's representative shall witness retesting as necessary until satisfactory performance is achieved. Notify the CA a minimum of 2 weeks prior to any retesting and get approval from the CA prior to starting any retesting.

3.8.3 Failure Due to Manufacturer Defect

If 3 or 10 percent, whichever is greater, of identical pieces of equipment (size alone does not constitute a difference) fail to perform to the Contract documents (mechanically or substantively) due to manufacturing defect, not allowing it to meet its submitted performance spec, all identical units may be considered unacceptable by the Contracting Officer. In such case, the Contractor shall provide the Contracting Officer with the following:

a. Within 1 week of notification from the Contracting Officer, the Contractor or manufacturer's representative shall examine all other identical units making a record of the findings.

b. Within 2 weeks of the original notification, the Contractor or manufacturer shall provide a signed and dated, written explanation of the problem, cause of failures, and all proposed solutions which shall include full equipment submittals. The proposed solutions shall not significantly exceed the specification requirements of the original installation. The Contracting Officer shall determine whether a replacement of all identical units or a repair is acceptable.

c. Two examples of the proposed solution shall be installed by the Contractor and the Contracting Officer shall be allowed to test the installations for up to 1 week, upon which the Contracting Officer will decide whether to accept the solution.

d. Upon acceptance, the Contractor and manufacturer shall replace or repair all identical items, at their expense and extend the warranty accordingly, if the original equipment warranty had begun. The replacement/repair work shall proceed with reasonable speed beginning within 1 week from when parts can be obtained.

3.8.4 Deficiency Report and Resolution Record

The CA shall submit original nonconformance forms with the deficiency report and resolution record at the end of the project. The deficiency report and resolution record shall contain documented items of nonconformance in materials, installation, or operation, including the master deficiency and resolution log, and documented results from startup, PFTs, FPT, and short-term diagnostic monitoring, as specified. Details of the components or systems found to be noncompliant with the drawings and

specifications shall be included. Adjustments and alterations performed or required to correct the deficiencies and the responsible parties shall be identified.

3.9 DEFERRED TESTING

3.9.1 Unforeseen Deferred Tests

If any check or test cannot be completed due to the building structure, required occupancy condition, or other deficiency, execution of checklists and FPT may be delayed upon approval of the Contracting Officer. These tests shall be conducted as soon as possible in the same manner as seasonal testing. Services of necessary parties shall be negotiated.

3.9.2 Seasonal Testing

The CA shall schedule, coordinate, and observe additional testing for seasonal variation in operations and control strategies during the opposite season to verify performance of the HVAC system and controls. The Contractor shall execute and document tests and correct deficiencies with facilities staff and the CA or Contracting Officer's representative witnessing. Testing shall be completed during the warranty period to fully test all sequences of operation. The Contractor shall make necessary revisions to O&M manuals and records due to the testing.

3.9.3 Short-Term Diagnostic Testing

After initial occupancy, the Contractor shall perform short-term diagnostic testing, using data acquisition equipment or the building automation system to record system operation over a two- to three-week period. The dynamic interactions between components in the building system shall be investigated. The scheduling, interaction between heating and cooling, and effectiveness of the HVAC system in meeting the comfort requirements shall be evaluated. The Contractor shall document tests and findings, and correct deficiencies according to the original testing requirements.

3.10 TRAINING

For each commissioned system, the Contractor shall conduct a training course for approximately three building operating staff members designated by the Government in the maintenance and operation of the system, including specified hardware and software. Duration of each training course shall be in accordance with the approved training plan. The training courses shall be conducted at the project site and the Contractor shall make audiovisual recordings of all training sessions and add them to the O&M manuals. A training day is defined as 8 hours of classroom instruction, including two 15-minute breaks and excluding lunchtime, Monday through Friday, during the daytime shift in effect at the training facility. Training courses on similar commissioned systems that would be maintained by the same building operating staff members may be scheduled to occur consecutively with Government approval.

3.10.1 Training Plan and Schedule

The Contractor shall prepare the training plan which shall be reviewed by the CA and approved by the COR. Training plan shall include, for each commissioned system, an outline of the course content with proposed duration of each portion, dates, start and finish times, location(s), names and qualifications of the instructors and a list of texts and other

materials that will be provided to support the training course. The training plan shall be submitted within 14 days after approval of the O&M manuals. The Contractor shall work with the CA and the COR to schedule the training activities and shall include a training schedule in the training plan.

3.10.2 Training Course Content

The training course for each commissioned system shall include, as a minimum, the following (as applicable to the system):

a. General purpose of the system (design intent)

b. Use of O&M manuals

c. Review of control drawings and schematics

d. Startup, normal operation, shutdown, unoccupied operation, seasonal changeover, manual operation, control setup and programming troubleshooting, and alarms

e. Interactions with other systems

f. Adjustments and optimizing methods for energy conservation

g. Health and safety issues

h. Special maintenance and replacement sources

i. Occupant interaction issues

j. System response to different operating conditions

See also the individual technical specifications for commissioned systems for system-specific training content requirements. In the event of conflict between this and other sections on duration of individual training sessions, this section shall take precedence.

3.10.3 Training Documentation

Contractor shall prepare training documentation consisting of:

a. Course Sign-in Sheet: A list of course attendees which shall be signed and dated by all attendees including the instructor. Provide two copies of the completed sign-in sheet to the COR for archive.

b. Training Manuals: Training manuals shall include an agenda, defined objectives for each lesson, and a detailed description of the subject matter for each lesson. Where the Contractor presents portions of the course material by audiovisuals, copies of those audiovisuals shall be delivered to the Government as a part of the printed training manuals. Training manuals shall be delivered for each trainee with two additional copies delivered to the COR for archive.

3.10.4 Training Verification

Contractor shall provide one copy of each completed sign-in sheet, one copy of each training manual and one copy of each videotaped course to the CA for inclusion in the Cx Report. The CA shall verify that all training in

the approved training plan has been conducted.

-- End of Section --

APPENDIX N
LEED Requirements for Multiple Contractor Combined Projects

Not Used

APPENDIX O
LEED Strategy Tables

Not Used

APPENDIX P

LEED Registration

APPENDIX P

LEED Registration of Army Projects

SAS 20 April 2012

Number of Registrations
Each building must be registered separately. Do not register buildings that do not meet LEED Minimum Program Requirements or buildings that are exempt from a specific LEED achievement requirement. For Campus Projects a separate registration of the site is required. For single-building projects the site credits are documented under the building registration and a separate registration for the site is not required.

Campus Projects
Campus projects (multiple buildings on a shared site) require creation of a Block at LEED Online and registration of each building plus separate registration of the shared site within that block. There is no fee associated with creation of a Block. The creator of the Block is the Block Administrator and controls access to the block for others (similar to a Project Administrator in a LEED registered project). If you create the Block you must also administer the Block and provide access to others on the project (as a minimum, the Project Administrator for each registration within the Block). If the Block is created by others, coordinate with the Block Administrator for your team's access.

Typical Registration Procedure
1. Login, complete the online registration form (see guidance below) at the GBCI LEED Online website and submit it online.
2. Pay the registration fee.
3. GBCI will follow up with a final invoice, the LEED-online passwords and template information.
4. The individual who registers the project online is, by default, the Project Administrator.

BEFORE YOU BEGIN:
Create a personal account with USGBC if you do not have one.
You will need the following information:
Project 5-digit PN Number
Building number/physical address/location of project
Zip code
Anticipated construction start and end dates

Completing the Registration Form
Project Title: Begin the project title with the word "Army" followed by the 5-digit PN number for the project. After this indicate the project name and building or "Master Site" as applicable to the individual registration. Example: "Army PN69835 UAS Maintenance Complex Master Site". Example: "Army PN69835 UAS Maintenance Complex Hangar".
Project Address 1 and 2: This is the physical location of the project. Provide building number, street address, nearest intersection or whatever is known to best describe the location of the project on the Installation.
Project City: This data field MUST BE FILLED OUT WITH THE INSTALLATION NAME. Spell out the word "Fort". Do not use abbreviations. Example: "Fort Bragg". Example: "Hunter Army Airfield". Projects located at Pope Army Airfield will indicate Fort Bragg.
Zip Code: Self-explanatory. All Fort Bragg/ Pope projects use zip code 28310.
Is Project Confidential: Indicate NO except, if project has security sensitivity (elements that are FOUO or higher security), indicate YES.
Notification of Local Chapter: Indicate NO unless Government/USACE Project Manager requests you to indicate YES.
Project Owner First Name, Last Name, email, phone, address: The Project Owner is the USACE Project Manager. Obtain this info from the USACE Project Manager.
Owner Organization: U.S. Army Corps of Engineers. This field MUST be completed this way.
May we publish Owner information: Indicate NO

APPENDIX Q
REV 2.1 – 30 SEP 2010
AREA COMPUTATIONS

Computation of Areas: Compute the "gross area" and "net area" of facilities (excluding family housing) in accordance with the following subparagraphs:

(1) Enclosed Spaces: The "gross area" is the sum of all floor spaces with an average clear height ≥6'-11" (as measured to the underside of the structural system) and having perimeter walls which are ≥4'-11". The area is calculated by measuring to the exterior dimensions of surfaces and walls.

(2) Half-Scope Spaces: Areas of the following spaces shall count as one-half scope when calculating "gross area":

- Balconies
- Porches
- Covered exterior loading platforms or facilities
- Covered but not enclosed spaces, canopies, training, and assembly areas
- Covered but not enclosed passageways and walks
- Open stairways (both covered and uncovered)
- Covered ramps
- Interior corridors (Unaccompanied Enlisted Personnel Housing Only)

(3) Excluded Spaces: The following spaces shall be excluded from the "gross area" calculation:

- Crawl spaces
- Uncovered exterior loading platforms or facilities
- Exterior insulation applied to existing buildings
- Open courtyards
- Open paved terraces
- Uncovered ramps
- Uncovered stoops
- Utility tunnels and raceways
- Roof overhangs and soffits measuring less than 3'-0" from the exterior face of the building to the fascia

(4) Net Floor Area: Where required, "net area" is calculated by measuring the inside clear dimensions from the finish surfaces of walls. If required, overall "assignable net area" is determined by subtracting the following spaces from the "gross area":

- Basements not suited as office, special mechanical, or storage space
- Elevator shafts and machinery space
- Exterior walls
- Interior partitions
- Mechanical equipment and water supply equipment space
- Permanent corridors and hallways
- Stairs and stair towers
- Janitor closets
- Electrical equipment space
- Electronic/communications equipment space

APPENDIX R
Preliminary Submittal Register

RMS SUBMITTAL REGISTER INPUT FORM

CONTRACT NUMBER

DELIVERY ORDER

TITLE AND LOCATION

Button <-----Right click for Instructions

SECTION	PARAGRAPH NUMBER	DESCRIPTION OF ITEM SUBMITTED	TYPE OF SUBMITTAL											CLASSIFICATION						REVIEWING OFFICE					
			01 - PRECON SUBMITTALS	02 - SHOP DRAWINGS	03 - PRODUCT DATA	04 - SAMPLES	05 - DESIGN DATA	06 - TEST REPORTS	07 - CERTIFICATES	08 - MFRS INSTRUCTIONS	09 - MFRS FIELD REPORT	10 - O&M DATA	11 - CLOSEOUT SUBMITTALS	FIO - FOR INFORMATION ONLY	GA - GOVERNMENT APPROVED	DA - DESIGNER OF RECORD APPRO	CR - CONFORMANCE REVIEW	DA / CR	DA / GA	DO - DISTRICT OFFICE	AO - AREA OFFICE	RO - RESIDENT OFFICE	PO - PROJECT OFFICE	DR - DESIGNER OF RECORD	AE - ARCHITECT / ENGINEER
00 72 00	52.236-13	Accident Prevention Plan	X														X				X				
00 73 00	1.11	Dev. From Accept. Design. No Deviation from Contract					X											X			X			X	
00 73 00	1.11	Dev. From Accepted Design - Deviates from Contract					X												X		X			X	
00 73 00	1.17	Supplemental Price Breakdown	X											X							X				
00 73 00	1.18	SSHO Qualifications	X												X						X				
01 10 00	5.2.3.1	(if concrete pavement) Joint Layout Plan with design drawings					X										X								
01 10 00	5.5.2	Building Envelope Sealing Performance Testing						X						X							X				
01 10 10	***	Tests as Req by Codes - DOR Develops Test Program						X						X							X			X	
01 10 00	5.8.3	BAS Review Information		X														X		X	X			X	
01 10 00	5.8.3	BAS Performance Verification Test						X						X							X			X	
01 10 00	5.8.4	Testing Adjusting and Balancing						X						X							X			X	
01 10 00	5.8.5	Commissioning						X						X							X			X	
01 10 00	6.15	Environmental As Required for Site Specific					X										X				X			X	
01 10 00	6.16	Permits as required for Site specific					X										X				X			X	
01 10 00	5.10.2	Fire Protection Tests						X	X					X							X			X	
01 32 01.00 10	3.4.1	Preliminary Project Schedule	X												X						X				
01 32 01.00 10	3.4.2	Initial Project Schedule	X												X						X				
01 32 01.00 10	3.4.3	Design Package Schedule	X												X						X				
01 32 01.00 10	3.6.1	Periodic schedule updates from the Contractor	X												X						X				
01 32 01.00 10	3.7	Time Extension Request (Schedule)	X												X						X				
01 33 00	1.8	Submittal Register - DOR Input Required	X												X						X			X	
01 33 00	1.8	Submittal Register Updates (Design Packages, etc.)	X												X						X			X	
01 33 00	1.3.1	Substitution of Manuf or Model Named in Proposal		X	X													X			X			X	
01 33 16	1.2	Identify Designer(s) of Record	X												X						X				
01 33 16	1.1.2 / 3.2.4	Fast Track Design Package(s)					X										X			X	X				
01 33 16	1.2	Identification of all Designers of Record	X														X				X				
01 33 16	3.2.1	Site and Utility Des Package, incl. Substantiation					X										X			X	X				
01 33 16	3.2.2/3.5	Interim Des Subm Package(s), incl. Substantiation					X										X			X	X				
01 33 16	3.5.1	Drawings					X										X			X	X				
01 33 16	3.5.2.2	Sitework Design Analyses					X										X			X	X				
01 33 16	3.5.2.3	Structural Design Analyses					X										X			X	X				
01 33 16	3.5.2.4	Security Design Analyses					X										X			X	X				
01 33 16	3.5.2.5	Architectural Design Analyses					X										X			X	X				
01 33 16	3.5.2.6	Mechanical Design Analyses					X										X			X	X				
01 33 16	3.5.2.7	Life Safety Design Analyses					X										X			X	X				
01 33 16	3.5.2.8	Plumbing Design Analyses					X										X			X	X				
01 33 16	3.5.2.9	Elevator Design Analyses (as Applicable)					X										X			X	X				
01 33 16	3.5.2.10	Electrical Design Analyses					X										X			X	X				
01 33 16	3.5.2.11	Telecommunications Design Analyses					X										X			X	X				
01 33 16	3.5.2.12	Cathodic Protection Design Analyses					X										X			X	X				
01 33 16	3.5.3	Geotechnical Investigations and Reports					X										X			X	X				
01 33 16	3.5.4	LEED Submittals					X										X			X	X				
01 33 16	3.5.5	Energy Conservation Documentation					X										X			X	X				
01 33 16	3.5.6	Specifications					X										X			X	X				
01 33 16	3.5.7	Building Rendering					X										X			X	X				
01 33 16	3.2.4/3.7	Final Des Submittal Package(s), incl. Substantiation					X										X			X	X				
01 33 16	3.7.5	DD Form 1354 (Transfer of Real Property)											X				X				X				
01 33 16	3.7	Independent Technical Review					X										X			X	X				
01 33 16	3.2.5/3.8	Design Complete Submittal Package(s)					X										X			X	X				
01 33 16	3.3.3	Design and Code Review Checklists					X										X			X	X				
01 33 16	A-2.0	SID - Interim and Final (as applicable)			X	X	X								X						X				
01 33 16	B-2.0	FFE (as Applicable)					X								X						X				
01 33 16	F-3.1.3	BIM Model and data					X										X			X	X				
01 45 04.00 10	3.2	Design and Construction QC Plan	X														X				X				
01 57 20.00.10	1.2	Environmental Protection Plan	X														X				X				
01 78 02.00 10	1.2.1	Final as-Built Drawings/ BIM Model											X		X										
01 78 02.00 10	1.2.3.11	Non-Hazardous Solid Waste Diversion Reports							X					X							X				
01 78 02.00 10	1.2.7	Provide final as-built CADD and BIM Model files											X		X						X				
01 78 02.00 10	1.2.9	Provide scans of all other docs in Adobe.pdf format											X		X						X				
01 78 02.00 10	1.3.1	Equip-in-Place list of all installed equip and cost											X		X						X				
01 78 02.00 10	1.3.2	Data on equip not addressed in O&M manuals											X		X						X				
01 78 02.00 10	1.3.3	Final as-built specs - electronic files											X		X						X				
01 78 02.00 10	1.4.2.1	Warranty management plan - FAR 52.246-21											X		X						X				
01 78 02.00 10	1.4.2.1	Certificates of Warranty for extended warranty items											X		X						X				
01 78 02.00 10	1.4.2.1	Contractor's POCs for implementing warranty process											X		X						X				
01 78 02.00 10	1.4.2.1	List of each warranted equip, item, feature or system											X		X						X				
01 78 02.00 10	1.5	See also Section 01 10 00 par. 5.8.4 and 5.8.5											X		X						X				
01 78 02.00 10	1.6.1.2	Equipment O&M Manuals - 1 electronic / 2 hard copies											X		X						X				
01 78 02.00 10	1.7	Field Training DVD Videos										X		X							X				
01 78 02.00 10	1.8	Pricing of CF/CI and GF/CI Property											X	X							X				
01 78 02.00 10	1.11	List of Completed Cleanup Items											X				X				X				
01 78 02.00 10	1.12	Interim Form DD 1354											X				X				X				
Appendix T	A. 1	Life Cycle Analysis for Light Level Tuning					X										X			X	X				
Appendix T	A. 4.	Lif Cycle Analysis Automated Sahing.					X										X			X	X				
Appendix T	B.1.	Qualifications of Testing Agent						X									X			X	X				
Appendix T	B. 1.	Functional area Lighting Control Tests						X									X			X	X				

RMS INPUT FORM 4288A

Export to RMS in CSV(MS-DOS) (*.csv) Format

Note: Reviewing Office Optional

APPENDIX AA:

Ft. Bragg Network Enterprise Center (NEC)

Installation Design Criteria (IDC)

DEPARTMENT OF THE ARMY

US Army Signal Network Enterprise Center (USASNEC)

FORT BRAGG, NORTH CAROLINA

INSTALLATION DESIGN CRITERIA (IDC) FOR FORT BRAGG SPECIFIC COMMUNICATIONS INFRASTRUCTURE REQUIREMENTS

AUG 2010 rev. 5

Distribution A

Distribution authorized to U.S. Government agencies and their Contractors only, for administrative or operational use, May 2010. Refer other requests for this document to Fort Bragg NETWORK ENTERPRISE CENTER, ATTN: ISB, Fort Bragg, NC 28310

DISCLAIMER

The use of trade names in this document does not constitute an official endorsement or approval of the use of such commercial hardware or software. Do not cite this document for advertisement.

CHANGES

Refer requests for all changes that affect this document to: FORT BRAGG NETWORK ENTERPRISE CENTER, ATTN: ISB, Fort Bragg, NC 28310.

DISPOSITION INSTRUCTIONS

Destroy this document when no longer needed. Do not return it to the organization. Safeguard and destroy this document with consideration given to its classification or distribution statement requirements.

TABLE OF CONTENTS

INTRODUCTION **1**

1.0 PURPOSE **2**
2.0 APPLICABILITY **2**
3.0 REQUIREMENTS **2**
3.1 Qualifications **3**
3.1.1 Contractor Responsibility **3**
3.2 Manufactured Products Requirements **3**
3.3 Manufacturer Recommendations **4**
3.4 Materials and Equipment **4**
3.5 Ft Bragg Outside Plant Design Support **4**
3.6 Initial Design Requirements for Ft Bragg **5**
4.0 DELIVERABLES/SUBMITTALS **6**
4.1 Drawings **6**
4.1.1 Premises Distribution System **6**
4.1.2 Record Drawings **6**
4.1.3 As-Built Drawings **7**
4.1.3.1 Drawing Format **7**
4.1.3.2 Drawing Submittals **7**
4.1.3.3 Butterfly Drawings **7**
4.2 Testing **8**
4.2.1 Test Plan **12**
4.2.2 Test Reports **12**
4.3 Spare Parts **13**
5.0 GENERAL **13**
5.1 Telecommunications Room (TR) requirements **13**
5.2 Equipment mounting backboard **13**
5.3 Telecommunications Pathways **13**
5.3.1 Ladder and Wire Cable Tray **14**
5.3.2 Conduits **14**
5.3.3 Pull Boxes **14**
5.4 Patch Panels **14**
5.4.1 Special Circuits **14**
5.5 Equipment Racks **15**
5.6 Cable Management **15**
5.7 Horizontal Cable Maintenance Slack **15**
5.8 Fiber Optic Cable Maintenance Slack **15**
5.9 Cable jacket and RJ-45 color code **15**
5.10 Labeling – premise cable **16**

TABLE OF CONTENTS (continued)

5.11 Geospatial Information **16**
5.11.1 Format **16**
5.11.2 Attributes **16**
5.11.3 Data Delivery **17**
6.0 PROTECTED DISTRIBUTION SYSTEM (PDS) 17
6.1 Documentation **17**
6.2 Guidelines **17**
6.2.1 Raceway **18**
6.2.2 Electrical Metallic Tubing (EMT) Solution **18**
7.0 SECURE ROOM/COMMUNICATION CLOSET 19
8.0 SECRET INTERNET PROTOCOL ROUTER NETWORK (SIPRNET) COMMUNICATION ROOM 20
8.1 New Construction Guidelines **21**
9.0 FACILITY BONDING AND GROUNDING 22
10.0 CABLE TAGGING AND TERMINAL STENCILING 22
10.1 Tag Type **22**
10.2 Tag Information **22**
Figure 10-0 23
11.0 OUTSIDE PLANT 24
11.1 Maintenance Holes/Hand Holes **24**
11.2 Maintenance Hole Lids **24**
11.3 Duct Bank **24**
11.4 Permanent Tracer Wire **24**
11.5 Sub-Duct/Innerduct **24**
11.6 Duct Plugs **25**
11.7 Splices **25**
11.8 Cable Assignment **25**
11.9 OSP Building Entry **25**
12.0 SYSTEM FURNITURE 26
Figure 13-0 26

APPENDICES

APPENDIX A – PREFERRED MATERIALS LIST A-1
APPENDIX B – INFRASTRUCTURE SUPPORT DIAGRAMS B-1
APPENDIX C – GLOSSARY OF ACRONYMS AND TERMS C-1
APPENDIX D – REFERENCES D-1

INTRODUCTION

Fort Bragg NETWORK ENTERPRISE CENTER: The Network Enterprise Center; plans, programs, operates and maintains base operations Information Technology (IT) support and services for Fort Bragg, Simmons Army Airfield, Pope AFB and Camp Mackall. It provides power projection IT support for contingency missions, emergency and split base operations and support for USAR and ROTC units of North Carolina.

Areas of Interest:

Communications Systems & Systems Support: The NETWORK ENTERPRISE CENTER provides customers with switch-based and wireless communications to facilities and/or activities of an installation, which are designated by the installation commander to be critical to accomplishing the mission. Other services include; providing cable infrastructure, networks, and external networks necessary to deliver electronic information to, from, and among mission-critical facilities/activities.

Information Assurance (IA): The NETWORK ENTERPRISE CENTER provides infrastructure and management services to protect Non-Secure Internet Protocol Network (NIPRNet), Secret Internet Protocol Network (SIPRNET) information, and information systems from unauthorized access and to protect the data within the systems. Services cover communication security and computer security requirements; includes network security features such as intrusion detection and controlled access, standard workstation security tools such as virus detection software, advice and assistance for accreditation documentation, security training, analysis of computer security incidents, and Information System Security monitoring.

Information Technology: The NETWORK ENTERPRISE CENTER provides common-user software and hardware components/support necessary to process and store data, as well as the management services needed to maintain them. Information Technology can exist with or without external communicators or networking (i.e., connected vs. stand-alone systems).

1.0 PURPOSE.

This Installation Design Criteria (IDC) provides information in addition to the Technical Criteria for Installation Information Infrastructure Architecture (I3A) that will enable **qualified communications contractors** to meet the specific communications infrastructure requirements compatible with the Fort Bragg NETWORK ENTERPRISE CENTER architecture. Some of these items either add information or clarify broader gauge instruction provided in the I3A. **Any conflicting guidance between this Criteria and other Installation Design documentation shall be resolved by following the most stringent requirements.** The NETWORK ENTERPRISE CENTER has also provided a preferred materials list within this document that enables standardization with previously installed components.

2.0 APPLICABILITY.

This Criterion applies to all subcontractors performing infrastructure installation work for the NETWORK ENTERPRISE CENTER, as specified in their contract with "CONTRACTOR". Stricter requirements may be imposed by subcontractors upon their employees or sub tier contractors. Subcontractors must follow the requirements of this IDC; however, the means of implementation may vary as determined by the subcontractor.

3.0 REQUIREMENTS.

NOTE: General electrical trade staff (electricians) shall not be used for the installation of the premise distribution system cables, pathways and associated hardware unless they are under direct supervision of a BICSI Certified Technician for the Telecommunications Contractor.

Equipment delivered and placed in storage shall be stored with protection from the weather, humidity and temperature variation, dirt and dust, or other contamination.

Commercial off the shelf manuals shall be furnished for operation, installation, configuration, and maintenance for all products provided as a part of the premise distribution system. Specification sheets for all cable, connectors, and other communications equipment shall be provided within the project submittals.

A record of all installed patch panels and outlets shall be provided in hard copy format per ANSI TIA/EIA-606. The hardware records shall include only the required data fields per ANSI TIA/EIA-606.

All work shall be supervised by a Telecommunications Contractor, hereafter referred to as the Contractor. In addition, all equipment shall be furnished and installed by a Telecommunications Contractor. The qualifications of the Manufacturer's products, the Contractor and the Installers performing the installation are specified herein. This shall include proof of the minimum qualifications specified herein.

3.1 Qualifications:

Contractor shall have a minimum of 3 years experience in the application, installation and testing of the specified systems and equipment to be installed. All Communication System Designs shall be accomplished and stamped by a Registered Communications Distribution Designer (RCDD) certified by Building Industry Consulting Services International (BICSI).

All supervisors assigned to the installation of this system or any of its components shall have a minimum Level 2 Copper and Fiber Optic Cable installer certification from BICSI and installers assigned to the installation of this system or any of its components shall have a minimum Level 1 Copper and Fiber Optic Cable installer certification from BICSI. All supervisors and installers shall also have factory certification from each equipment manufacturer that they are qualified to install and tes**t.**

Installers: The Contractor shall submit certifications to the Contracting Officer, who will in turn provide the NETWORK ENTERPRISE CENTER's Infrastructure Support Branch (ISB) with documentation that all installers are BICSI and factory certified to install and test the intended products.

All installers assigned to the installation of this system or any of its components shall have a minimum of 3 years experience in the installation of the specified copper and fiber optic cable and their components.

3.1.1 Contractor Responsibility

The Contractor shall provide hard and soft copies of all test data within 7 days of system final testing to the appropriate Contracting Officer. A record of all installed cable shall be provided in hard copy format per ANSI TIA/EIA-606. The cable records shall include the required data fields for each cable and complete end-to-end circuit report for each complete circuit from the assigned outlet to the entrance facility per ANSI TIA/EIA-606. For all fiber optic cables, power meter test (1310 and 1550 **bi-directional**) results shall be provided in a hard and soft copy format as well. Bi-directional OTDR traces shall be required for every strand including dark fibers left for spares. ***These traces will include both connectors to be within cursers***. All twisted pair copper cables shall have a disk copy output of the test results with station ID assigned.

3.2 Manufactured Products Requirements:

The equipment and hardware provided under this contract shall be from manufacturers that have a minimum of three years experience in producing the types of systems and equipment specified.

3.3 Manufacturer's Specifications:

Where installation procedures, or any part thereof, are required to be in accordance with the specifications of the manufacturer of the material being installed, printed copies of these specifications, prior to installation shall be provided. Installation of the item will not be allowed to proceed until the specifications are received and approved by the NETWORK ENTERPRISE CENTER.

3.4 Materials and Equipment:

Materials and equipment shall be installed in accordance with the manufacturer's specifications along with any applicable codes and standards. Materials shall be the standard products of a manufacturer regularly engaged in the manufacture of the products and shall be the manufacturer's latest standard design that has been in satisfactory use for at least 1 year prior to installation. Materials and equipment shall conform to the respective publications and other requirements specified below and to the applicable requirements of NFPA 70.

Where materials and equipment are specified to conform, be constructed, or tested to meet specific requirements, certification that the items conform to such requirements must be provided. Certification by a nationally recognized testing laboratory that a representative sample has been tested to meet the requirements, or a published catalog specification statement to the effect that the item meets the referenced standard, will be acceptable as evidence that the item conforms. Compliance with these requirements does not relieve the Contractor from compliance with other requirements of the specification.

3.5 Ft Bragg Outside Plant Design Support

Planning and design of outside plant fiber optics and copper cable plant at Ft Bragg must be coordinated through the NETWORK ENTERPRISE CENTER. The NETWORK ENTERPRISE CENTER will provide the following information and assistance to the design engineer for the proposed facility design;

- Location of nearest fiber service and strand count
- Location of the nearest copper service and cable count
- Location of nearest manhole, handhole, or base cable support infrastructure that can provide a duct tie-in point
- Fiber optic and/or copper cable designation for labeling any new cables
- Numbering scheme for manhole, handholes, pedestals, and other base cable support infrastructure
- Field support to engineer/designer during engineering site survey
- Reserve copper cable counts, fiber strand counts, and rack space provided
- Reserve duct pathways identified by the design engineer
- Drawings available to aid the design engineer with base cable pathway or duct bank design

3.6 Initial Design Requirements for Ft Bragg

Design of outside plant pathways, outside plant cable scheme, cable placement in ducts and all other design requirements for outside plant shall be completed by the design engineer, not the NETWORK ENTERPRISE CENTER. Please refer to the Army I3A document, specifically figures C-2 through C-6 to obtain typical drawings required as submittals for outside plant design.

- The design engineer shall not use the last remaining duct in any pathway system/duct bank on Ft Bragg, Simmons Army Airfield, Pope AFB or Camp Mackall. The design shall include one spare duct for maintenance purposes in any segment of pathway or duct bank design on Ft Bragg, Simmons Army Airfield, Pope AFB or Camp Mackall.

When no existing fiber or copper service is available near the proposed facility location, the following scenarios will apply;

- Design engineer shall be required to provide service to the nearest Area Distribution Node (ADN) or Remote Switch Unit (RSU)
- To preserve limited duct space at the ADNs and RSUs, it is required at Ft Bragg to place a substantially larger cable into the facility than may be necessary for the project under design
- NETWORK ENTERPRISE CENTER requires a minimum fiber optic design of 288 strands from any ADN
- NETWORK ENTERPRISE CENTER requires a minimum of 1200 copper cable pair design at any RSU location

NOTE: Tab F of the 1391 shall include compensation for upsizing any cable system planned from an ADN or RSU point of demarcation.

4.0 DELIVERABLES/SUBMITTALS

Deliverables are to be transmitted with a cover letter, on the prime contractor's letterhead, describing the contents. As-built drawings shall be delivered within 14 days of completion of project.

All test results will be required as applicable to this project. Test results will be required 7 days after completion of all testing and prior to the final inspection. One copy will be sent to the identified POC at the NETWORK ENTERPRISE CENTER.

Government approval is required for submittals. The NETWORK ENTERPRISE CENTER Infrastructure Support Branch will review everything that is submitted and/or delivered to include the following:

4.1 Drawings:

4.1.1 Premises Distribution System

Written certification that the premise distribution system complies with the EIA ANSI/TIA/EIA-568-C.1, C.2, and C.3, EIA ANSI/TIA/EIA-569-A, EIA ANSI/TIA/EIA-606 standards, and EIA ANSI/TIA/EIA-607 standards.

Detail drawings, ANSI D size drawing format, including a complete list of equipment and material. Detail drawings shall contain complete wiring and schematic diagrams and other details required to demonstrate that the system has been coordinated and will function properly as a system. Drawings shall include vertical riser diagrams, equipment rack details (to include complete wire management support systems in Telecommunications Room), elevation drawings of telecommunications room wall, outlet face plate details for all outlet configurations, size and types of cables, conduits, and cable trays.

Drawings shall show proposed layout and anchorage of equipment and appurtenances with equipment relationship to other parts of the work including clearance for maintenance and operation.

4.1.2 Record Drawings

Record drawings for the installed wiring system infrastructure per EIA ANSI/TIA/EIA-606. The drawings shall show the location of all cable terminations and location and routing of all backbone and horizontal cables. The identifier for each termination and cable shall appear on the drawings.

4.1.3 As-Built Drawings:

4.1.3.1 Drawing Format

The contractor shall provide all drawings in either AutoCAD or Micro-station format. The contractor shall contact NETWORK ENTERPRISE CENTER ISB for information regarding software version requirements to accomplish all updates identified in these Criteria.

4.1.3.2 Drawing Submittals

The contractor shall provide the NETWORK ENTERPRISE CENTER ISB one (1) electronic and (1) hardcopy of the proposed route prior to construction and the final installation Cable Diagram drawings, "ANSI D" size series.

The drawings shall reflect all cable and duct pathways, manholes, manhole sizes, distance between manholes, number of conduit in each duct bank, and the size, type, and cable designations. **The contractor shall provide three (3) hard copies of the "red-line" Cable Diagram drawings, "ANSI D" size series to NETWORK ENTERPRISE CENTER ISB prior to or during final inspection and acceptance.**

4.1.3.3 Butterfly Drawings

The contractor shall provide the NETWORK ENTERPRISE CENTER ISB one (1) electronic and (1) hardcopy of the proposed installation prior to construction and the final installation of the Manhole Racking Diagram (butterfly) "ANSI D" size series drawings. The drawings shall reflect all cable and duct penetrations, manhole sizes, conduit placement in relation to the manhole, and the size, type, and cable designation.

The contractor shall provide three (3) hard copies of the "red-line" Manhole Racking Diagram (butterfly) drawings, "ANSI D" size series to NETWORK ENTERPRISE CENTER ISB prior to or during final inspection and acceptance.

4.2 Testing:

Category 6 Premise Cabling

A. Every cabling link (horizontal cabling, copper backbone, riser cables, voice wallfield to patch panel, etc…) in the installation shall be tested and documented.

B. The horizontal cabling shall be tested from the communications rooms patch panel to the work area outlet using the **permanent link** configuration (see figure B-1) and specifications of ANSI/TIA/EIA-568-C.1.

C. Any cable that fails shall be re-terminated and tested again. If the cable does not meet specifications after terminating again, replace the cable, terminate, and test again.

D. A paper copy of the test results shall be provided in a professional appearing binder and presented to the NETWORK ENTERPRISE CENTER ISB.

The following summary information shall be included:

- The identification of the link in accordance with labeling scheme
- The name of the building where the cable is located
- The brand name, model, and serial number of the tester
- The identification of the tester interface
- The revision of the tester software and the revision of the test standards database
- The overall pass/fail evaluation of the link being tested, including the Near End Cross Talk (NEXT) Headroom (overall worst case) number
- Date and time the test results were saved in the memory of the tester
- The name of the standard selected to execute the stored test results
- The type of cable being tested (Cat 6)

E. The detailed test results must include the following parameters:

- Wire map
- Length in feet
- Insertion loss
- Near-End Cross Talk (NEXT)
- Power Sum Near-End Cross Talk (PSNEXT)
- Equal-Level Far End Crosstalk (ELFEXT)
- Power Sum Equal-Level Far-End Crosstalk (PSELFEXT)
- Return loss
- Propagation delay
- Delay skew

F. The test instrument shall have current certification of calibration in accordance with manufacturer's requirements and must comply with or exceed the accuracy requirements for the proposed Level III field testers as defined in the TIA Cat 6 Standard.

G. The pass or fail condition for the link being tested is determined by the results of the required individual tests. Any fail or fails result yields failure for the link-under-test.

H. The test results for each link shall be recorded in the memory of the field tester upon completion of the test.

I. The test results saved by the tester shall be transferred to a CD-ROM. A guarantee must be made that the measurement results are transferred to the CD-ROM unaltered, that is, as saved by the tester at the end of each test. The guarantee also must specify that the results cannot be modified later.

J. The test results for the completed job shall be stored and delivered to NETWORK ENTERPRISE CENTERISB on a CD-ROM including the software tools required to view, inspect, and print any selection of test reports.

K. Test all riser and wall field copper cable for cable faults (grounds, shorts, crosses, opens, splits, reverses, transpositions).

Copper Cabling - OSP and telephone cross-connect cable

A. Existing Cables. Prior to splicing, contractor shall test existing pairs to be spliced into the new cable. The tests shall check for cable faults (grounds, shorts, crosses, opens), splicer's errors (splits, reverses, transpositions), shield continuity, and insulation resistance (insulation resistance on existing cables is accomplished on spare pairs only). The contractor shall not be responsible for correcting existing cable faults (e.g. splicer's errors, open shield continuity, low insulation resistance), however, the NETWORK ENTERPRISE CENTER PM must be notified of such conditions immediately upon identification and before splicing takes place. Any existing cable cable-faults or splicer's errors not documented and reported to the NETWORK ENTERPRISE CENTER shall be cleared by the contractor.

B. After splicing and terminating new cable and prior to splicing any new cable into existing cable, the new cable will be tested and documented to be free of cable faults (grounds, shorts, crosses, and opens) and splicer's errors (splits, reverses, and transpositions).

C. After splicing and terminating new cable into existing cable, test to ensure the cable shield is continuous from the Main Distribution Frame (MDF) to each distant termination point.

D. After splicing new cable into existing cable, test the cable for end-to-end cable faults (grounds, shorts, crosses, and opens) and splicer's errors (splits, reverses, and transpositions).

E. Insulation resistance as tested on a minimum of three non-working conductors in each 25 pair group of the cable shall be documented to be of a value that is satisfactory for the length and type cable being tested.

F. Loop Resistance Tests: After all splicing and terminating is complete, make a D.C. loop resistance measurement on all affected (non-working) cable pairs. Measure from all terminals back to the cable origin or central office

G. Test results may be recorded on locally developed test sheet.

H. Where the contractor uses an existing ground point, it shall be tested prior to being connected to the system. The National Electrical Code requires a resistance to ground reading of 25 ohms, however, Military Handbook 419A, paragraph 2.2.2.2 states that 25 ohms is not low enough for communications equipment. In order to protect personnel and equipment, Fort Bragg recommends a design goal of 10 ohms for communications systems where practical. If the ground point proves unsuitable, the contractor shall notify the NETWORK ENTERPRISE CENTER PM in writing of the defective ground. The tests to be performed on the grounds shall measure the ground potential (ability to dissipate voltage through the ground point to the earth).

Fiber Optic Cable

A. All of the installed fiber optic cables shall be tested and must pass the requirements of ANSI/TIA/EIA-568-C.

B. Every fiber optic cable in the installation shall be tested in accordance with field test specifications as defined in ANSI/TIA/EIA-568-C.

C. Any cable that fails these tests must be diagnosed and corrected. The corrective action shall be followed with a new test to prove that the corrected link meets the performance requirements. The final and passing test must be saved and included in the final test results documentation.

D. Field test instruments for single-mode fiber cabling shall meet the requirements of ANSI/TIA/EIA-526-7.

E. The test results for each link shall be recorded in the memory of the field tester upon completion of the test.

F. The test results saved by the tester shall be transferred to a CD-ROM. A guarantee must be made that the measurement results are transferred to the CD-ROM unaltered, that is, as saved by the tester at the end of each test. The guarantee also must specify that these results cannot be modified later.

G. The test results for the completed job shall be stored and delivered to NETWORK ENTERPRISE CENTER ISB on a CD-ROM, including the software tools required to view, inspect, and print any selection of test reports.

H. A paper copy of the test results shall be provided to NETWORK ENTERPRISE CENTER ISB in a professional appearing binder. The following summary information shall be included:

- The identification of the link in accordance with the NETWORK ENTERPRISE CENTER labeling scheme.
- The name of the building where the cable is located.
- The brand name, model, and serial number of the tester.
- The revision of the tester software and test standards database in the tester.
- The overall pass/fail evaluation of the link being tested.
- The name of the standard selected to execute the stored test results.
- Cable type and the value of the index of refraction used to calculate lengths.
- The insertion loss (attenuation) measured at each wavelength, the test limit calculated for the corresponding wavelength and the margin (difference between the measured attenuation and the test limit value).
- Loss budget calculations

- The link length shall be reported for each optical fiber for which the test limit was calculated using the following formulas:

  - Link Attenuation = Cable Attenuation + Connector Attenuation + Splice Attenuation

  - Cable Attenuation (dB) = Attenuation Coefficient (dB/km) * Length (km)

  - Connector Attenuation (dB) = number of connector pairs * connector loss (dB) (Maximum acceptable connector loss = 0.75 dB)

  - Splice Attenuation = number of splices * splice loss (Ref I3A "Splices and Power Budget" for acceptable loss budgets).

I. The date, time, and test results will be saved in the memory of the tester

J. All fiber strands shall be tested Bi-directionally End-to-End (each segment of cable, building-to-building, etc.) @ 1550nm and 1310nm.

K. Optical fiber Cable testing shall be conducted according to ANSI/TIA-EIA568-A, Annex H. Each optical fiber shall be tested Bi-Directionally utilizing Optical Power Meter @ 1550 and 1310 nm.

L. Optical fiber cable tests shall be conducted according to ANSI/TIA-EIA568-A, Annex H. **Each optical fiber shall be tested and recorded Bi-Directionally utilizing an OTDR.**

M. At minimum, OTDR and Power Meter testing is required for Outside Plant Fiber Optic Tests. A Power Meter shall be used for premise fiber, horizontal or facility backbone cabling.

4.2.1 Test Plan

Test plan defining the tests required to ensure that the system meets technical, operational and performance specifications, 60 days prior to the proposed test date. The test plan must be approved before the start of any testing. The test plan shall identify the capabilities and functions to be tested, and include detailed instructions for the setup and execution of each test and procedures for evaluation and documentation of the results.

4.2.2 Test Reports

Test reports in booklet form with witness signatures verifying execution of tests. Reports shall show the field tests performed to verify compliance with the specified performance criteria. Test reports shall include record of the physical parameters verified during testing, a copy of certificate of calibration for test equipment, and a copy of the test administrator's certification on the test equipment used for testing. Test reports shall be submitted within seven business days after completion of testing to the NETWORK ENTERPRISE CENTER Infrastructure Support Branch for Quality Assurance Inspection purposes.

4.3 Spare Parts

Spare parts, tools, and test equipment provided under this contract shall be submitted to NETWORK ENTERPRISE CENTER ISB along with an inventory of these spare parts, tools, and test equipment. The inventory data shall include a complete list of parts and supplies, with current unit prices and source of supply, and a list of spare parts recommended for stocking.

5.0 GENERAL

5.1 Telecommunications Room (TR) Requirements

Telecommunications Rooms must be appropriately sized to accommodate proposed cable/Local Area Network (LAN) distribution systems and associated connectivity equipment for any given facility and/or facility floor. The minimum size telecommunications room for system installation is 8 feet by 10 feet. This would support a two-equipment rack configured system. If any additional equipment/racks are placed in a TR, the TR must be enlarged to meet the requirement of having a full 36 inches (front and rear) of space between the communications rack assembly and the nearest wall and 24 inches on each side of rack assembly. The entrance door must swing outward into the hallway, or additional room square footage must be added to the floor space to accommodate interior door swing. Dedicated Ventilation Air Conditioning (VAC) systems support must be provided for each telecommunications room. These systems must have a dedicated 20 Ampere (Amp) circuit and must be of an appropriate capacity to self-support the room per proposed equipment installation requirements. VAC systems must not take up any floor space within the comm room. Preference for placing a Telecommunications Room is centrally located in any given facility. If the facility has multiple stories, the preference is for stacked telecommunications room placement, facilitating easy interconnectivity between telecommunication rooms. Other utilities (e.g. CCTV, Fire Alarm, Mass Notification, etc…) shall not have equipment installed in the TR or have cabling that terminates in the TR.

5.2 Equipment Mounting Backboard

The NETWORK ENTERPRISE CENTER requires covering no less than two walls with type A-C fire rated plywood 4’ x 8’, from floor to ceiling.

5.3 Telecommunications Pathways

Installed pathways for telecommunications cabling and equipment shall be for the sole use of communications cabling. Other utilities (e.g. CCTV, Fire Alarm cabling, mass Notification Systems cabling, etc…) shall have a cabling pathway that is separate and distinct from the telecommunications cabling pathway. Abandoned cabling encountered by the contractor or identified by NETWORK ENTERPRISE CENTER personnel shall be removed by the contractor performing the installation.

5.3.1 Ladder and Wire Cable Tray

Ladder Rack (see figures B-2 and B-3) must be used in the TR to provide distribution between the telephone backboard, equipment racks, backbone conduits and the distribution cable tray. Welded wire cable tray (Flextray or equivalent) must be used to distribute premise cabling outside the TR. All tray systems must be installed according to Manufacturer instruction and TIA/EIA standards. Cables that transition from higher elevation pathways to a lower level pathway will be supported by waterfalls/sweeps and/ or vertical ladder rack the entire span of the transition. All Cable Tray Pathways shall be grounded to the TGMB or TGB with a #6 AWG wire. Each section of ladder rack and cable tray shall be bonded together using the manufacturers approved methods.

5.3.2 Conduits

No section of Telecommunications pathways conduit shall contain more than two (2) 90 degree bends or a combined total of 180 degrees in bends (see figure B-4 for conduit bend guidelines). Conduits installed from cable tray to WAO's shall be no smaller than 1" trade size and shall be bonded to the tray using manufacturer's recommended attachment clamps or using grounding bushings and a # 6 AWG wire bonded to the tray with a split bolt or equivalent connector (Tie wraps are not approved as a bonding connector for grounding and shall not be used as such). To protect installed cabling and provide proper support, Rigid IMC or EMT sleeves (PVC is unacceptable) shall be used for wall penetrations were telecommunications cabling extends through a wall.

5.3.3 Pull Boxes

Pull boxes shall be sized IAW current BICSI Telecommunications Distribution Methods Manual/ Horizontal Pathways Systems (see figure B-5 for pull box installation guidelines). Pull boxes shall not be used in place of 90 degree bends.

5.4 Patch Panels

Contractors shall install separate patch panels for voice and data connections. Data patch panels are used for the horizontal cabling from the patch panel to the work area outlets. Voice patch panel(s) will be used to connect the voice feeder cables from the 110 block wall field (see figure B-6). Voice wall field shall be wired using a 2 pair per port configuration with pins 3, 4, 5, and 6 being wired on a standard RJ-45 connector (see figure B-7).

5.4.1 Special Circuits

Terminate all special circuits to the last ports on the first premise cable patch panel working in reverse (e.g. on a 24 port patch panel, ports 21-24 will be used for special circuits, with port 24 being utilized first). Label fire alarm circuits "FACP", label Utility Monitoring & Control Systems circuits "UMCS", and label elevator "Elev".

5.5 Equipment Racks – See Figure B-8

Floor mounted equipment racks shall be standard 19-inch aluminum relay racks, uprights shall be three inches deep, 1 ¼ inches wide, drilled and tapped 12-24 in half inch patterns. Racks shall be provided with a standard top cross-member, and predrilled base plate to allow secure floor fastening. Open frame equipment racks shall be seven feet in height and clear coated. AC outlets shall be provided in the equipment rack to alleviate any tripping hazards. One quad, dedicated 20-Ampere outlet assembly shall be provided for each equipment rack. All racks shall be bonded with a separate bonding conductor to the TMGB or TGB. Equipment rack layout shall be in accordance with figure B-8 of this IDC. Contractor shall ensure that 10 RU remain available for Government Furnished Government Installed equipment.

5.6 Cable Management

Cable management shall be specifically manufactured for routing cables, wires and patch cords horizontally and vertically on standard 19-inch equipment racks. Cable management shall consist of ring or bracket-like devices mounted on rack panels for front and rear horizontal use or of a type that utilizes duct fingers with snap on covers. Cable management shall securely mount to racks by screws and/or nuts and lock washers. Horizontal cable management shall be provided above, below, front and rear of each patch panel on the standard 19-inch equipment rack(s). Horizontal cable management shall be of a type that utilizes duct fingers with snap on covers and a minimum of 2 RU size. Vertical cable management will be provided between and on the ends of equipment racks, and provide front and rear vertical cable management. Vertical Cable management shall be of a type that utilizes duct fingers with snap on covers. Velcro ties shall be utilized for binding of horizontal distribution wires within the Horizontal and Vertical wire management systems.

5.7 Horizontal Cable Termination and Maintenance Slack

Horizontal cabling shall be terminated on RJ-45 connectors using the T568A termination standard (see figure B-9). Maintenance loop or slack required for modification or re-termination of horizontal cabling shall be no less than 10 feet, at the telecommunications room and no less than 24 inches at the outlet. Slack at the user termination shall not be placed in the outlet box, but shall be installed at the nearest practical point to the outlet box. (i.e. above the ceiling prior to entering the wall).

5.8 Fiber Optic Cable Maintenance Slack

In regards to the I3A reference on fiber optic cable, Ft. Bragg NETWORK ENTERPRISE CENTER requires the installation of single-mode fiber optic cable. Fiber Optic Cable shall have a 20 foot maintenance loop in the TR.

5.9 Cable Jacket and RJ-45 Color Code

Standard color code:

Green - The standard wire and jack color for UNCLASSIFIED.
Red - The standard wire and jack color for CLASSIFIED (SECRET)
Yellow - The standard wire and jack color for CLASSIFIED (TOP SECRET)

5.10 Labeling – Premise Cable

All labeling shall be done in accordance with TIA/EIA-606-A and the Fort Bragg Network Enterprise Center's standard labeling scheme provided as a technical exhibit to this specification (see figure B-10). WAO's shall be sequentially labeled going clockwise throughout the facility. For example, when standing in the doorway (facing out) of the TR, start numbering your WAO's from left to right, clockwise around the building. As you enter each room, number your WAO's sequentially around the room starting with the first outlet next to the door (see figure B-11). **If clarification is needed, check with the NETWORK ENTERPRISE CENTER Project Manager or Quality Assurance representative.**

5.11 Geospatial Information

5.11.1 Format

Geospatial information shall be delivered on storage media (specify magnetic or optical media preferences), in a "shape file" format within a folder named the same as the prefix of the shape file, e.g., if the shape-file is named "points_pafb_28.shp" the folder shall be named "points_pafb_28". The folder shall contain all the files that make up the general shape file, i.e., ".shp", ".shx", ".dbf", etc. along with a standard metadata file, i.e., ".shp .xml". Any collected "z-values" shall be reported in a dedicated field, in the appropriate table, and in the format/datum consistent with the standard elevation methods in use by the DPW.

5.11.2 Attributes

Attributes and data table formats for communication infrastructure/facilities are described and defined in the Communications Mission Data Set promulgated by the NETWORK ENTERPRISE CENTER ISB. The following attributes are to be reported in the appropriate shape file for the geospatial features collected by the contractor:

- Manhole Number
- Secure Manhole Lid (Yes or No)
- Location of Manhole\Nearest Intersection
- Nearest Manhole
- Nearest Bldg
- Existing Copper Cables
- Existing Fiber Cables
- Comments (Manhole Condition)
- Date Collected
- Date of Last update
- Obstructions

Subcommodity_a (Table: xxxyyy) {for feature y}
Attribute_1 (Field: aaabbb)
Attribute_4 (Field: cccddd)
Subcommodity_e (Table: yyyzzz) {for feature z}
Attribute_7 (Field: zzzaaa)

5.11.3 Data Delivery

The contractor shall provide the geospatial information in electronic format to each of the following:

Fort Bragg NETWORK ENTERPRISE CENTER ISB, ATTN: Larry White, Fort Bragg, NC 28310
and

Fort Bragg Directorate of Public Works (DPW), Fort Bragg, NC 28310

6.0 PROTECTED DISTRIBUTION SYSTEM (PDS)

All PDS design and material data sheets must be submitted to the NETWORK ENTERPRISE CENTER for approval, prior to procurement or installation to avert costly revisions or change orders.

ALL PDS Designs shall be signed off by a NETWORK ENTERPRISE CENTER SIPR planner to ensure proper installation pathway engineering practices are met in the initial design prior to installation.

PDS shall NOT be installed in "dead space" areas out of normal inspection areas. (i.e. closets, bathroom, ceilings and under the floor).

The Contractor shall install Holocom or an expandable type PDS System solution. The PDS System attributes shall include an interlocking "clam-shell" design that enhances security and flexibility in that it can be securely closed and locked, and then re-opened for security inspections and network changes or enhancements. The PDS must also include an electrostatic powder coating, which provides an aesthetically pleasing appearance. All SIPRNET installation technicians must be certified by the manufacture of the designated product choice to install SIPRNET PDS on Ft. Bragg.

6.1 Documentation

Per references below, each agency, service, or organization is afforded interpretation and approval authority, by the Designated Approving Authority (DAA), per the respective manual when assessing any PDS design and installation methodology.

A. NSTISSI 7003, Army Regulation
B. 25-2 Chapter 6, Army Regulation
C. Technical Guide for Integration of SIPRNET version 5.0 as a Hardened Carrier PDS
D. NSTISS, NSTISS Advisory Memorandum (NSTISSAM) TEMPEST 2/95, Red/Black Installation Guidelines, 12 Dec 95
E. NSTISS, NSTISSAM TEMPEST 2/95A
F. Amendment to TEMPEST 2/95, 03 Feb

6.2 Guidelines (This guide should not be treated as a substitute to listed references.)
PDS installations shall be inspected by NETWORK ENTERPRISE CENTER QA personnel in 3 phases:

1. **Initial pre-installation walk thru of bldg PDS pathways.**
2. **50% installation inspection prior to cable being installed.**
3. **Final after cable and epoxy are installed and applied prior to bldg or system turnover.**

6.2.1 Raceway Solution

A. Ensure that all raceway runs should be approximately 1 inch off the wall. In special instances, this separation may be exceeded, but in no case should the raceway be mounted flush against the wall. There should be 3 mounting point per 10 ft section of raceway.

B. There should be no more than ¼ inch play on all vertical TOP CAP and span cuts.

C. All INF's should be physically inspected to ensure that they are tight and cannot turn.

D. Lock covers shall be physically inspected to ensure that the lock cap is properly seated inside the locking mechanism. This will be accomplished by grasping by hand and moving from side to side while attempting to remove from raceway.

E. Thru walls will be run utilizing threaded rigid pipe and locking rings on both the inside and outside of raceway to ensure a secure penetration into the raceway will be maintained.

6.2.2 Electrical Metallic Tubing (EMT) Solution

A. Use all ferrous thin-wall EMT of the following sizes 1 inch, 1.5 inches, and 2 inches.

B. Use all ferrous compression fittings only. Plastic is not permitted. Epoxy all fittings upon assembly (except pull box covers). Steel epoxy all pull box covers upon completion wire pulling and testing. Ensure that all fittings and hangers are secured completely and cannot be loosened or removed by hand prior to the application of epoxy. The epoxy will reveal tampering. All epoxy must be clean and neat to distinguish tamper evidence when periodically inspected by the local security office (once every six months or as required by local policy).

C. Install all distribution in plain view (i.e. not above the ceiling and not behind the walls).

D. PDS between floors. PDS installed between floors in multi-story buildings should be installed in the following manner. The section that goes through the false ceiling must allow inspection. The ceiling tile can be removed or replaced with a clear tile or egg crate style, if allowable by the local fire code. If neither of those options is viable, an inspection path (tube) should be built around the riser. Conduit within this facility must be at least 1-inch EMT or galvanized threaded pipe, which should be large enough to accommodate cables that will be ran in the facility at no more than a 40% fill ratio.

E. Design the SIPRNET distribution in a tree type fashion. Start at the closet location where the equipment is located with a single EMT sized to contain all CAT 6 wire runs (sizing is 40% fill max in circular mils). Extend the distribution from this backbone to locations. Careful planning will allow for future expansion additionally leave pull strings in place for future growth and expansion.

F. Run all EMT throughout the building to optimize the separation from water pipes, electrical wires, electrical pipes, plumbing, air conditioning, etc. A minimum of six-inch separation is required.

G. Ensure that a pull box is installed at 30 foot intervals for straight runs and after every two 90 degree turns or when you transverse between floors and into new areas.

H. Secure the EMT to the permanent structure using standard strap and spacer, hangers and anchors (dry wall/toggle bolts, concrete/ expansion bolts, etc.) 360 degree inspection area must be maintained around the PDS. There should be 3 mounting points per 10 ft section and a mounting point 1.5 inches from every coupling.

I. A lockbox (with internal hinges) is used to protect the PDS termination. Lockboxes used for termination within an LCA should be at least 6 x 6 x 4 inches deep and have a door with internal hinges. The hasp must be permanently fixed to the box. If hinges are external, the hinge pin must be welded. Tap screws may be used internally to mount the terminal block. No other openings or air gaps are authorized for this box. The lock for the lockbox must be a GSA-approved changeable combination lock. The lockbox may terminate up to six connections within the box as long as it is within 12 feet of the classified workstations and/or printer located in the same room.

J. Paint: The carrier must not be painted or covered with wallpaper or any other covering. Coverings can conceal carrier tampering. Paint and coverings are easier to match than the bare material when attempting to hide unauthorized penetration.

K. All EMT PDS shall be left with PULL STRINGS in place throughout the conduit PDS system, even after cable is pulled in each run.

7.0 SECURE ROOM/COMMUNICATION CLOSET

NOTE: The card reader release mechanism must not be a magnetic lock that will release during a power failure. As a minimum, the door must have a high security dead bolt lock with a 25-millimeter (1-inch) throw and a cylinder that meets the requirements of Underwriters Laboratories, Inc., (UL) 437 Standard for Key Locks.

A. Units that will have their nodes operating only during normal business hours require the following site preparation of their closets:

B. To be certified as a CAA, the area must meet the following physical requirements. The walls, floor, and roof must be of permanent construction materials; i.e., concrete block, concrete, plaster, gypsum wallboard, metal panels, hardboard, wood, plywood, or other materials offering resistance to, and evidence of, unauthorized entry into the area. For new construction, walls should extend from true floor to true ceiling (structural floor to structural ceiling) with permanent construction materials. In existing facilities, walls may also be extended with 18-gauge expanded steel screen or equivalent wire mesh.

C. The access door to the area must be substantially constructed of wood or metal. In addition, either a combination type lock such as a KABA-MAS CDX-09 or a card reader lock should be added to the entry door to provide greater physical protection than the single key entry and limit access to authorized personnel.

As an alternative, a built-in GSA-approved combination lock meeting Federal Specification FF-L-2740 can be used. The hinge pins of out-swing doors must be pinned, brazed, or spot- welded to prevent removal. When double doors are used, install an astragal on the active leaf of the door. Doors other than the access door must be solid wood or metal (with no glass panels), have a metal bar that extends across the width of the door, or be secured by another means that will prevent entry from the outside.

D. Ideally, the area should not contain windows. When windows are used, they should be permanently secured to prevent opening. For new construction, all windows that might reasonably afford visual observation of classified activities within the facility must be made opaque. In existing facilities, windows must be made opaque or be equipped with Room-darkening blinds, drapes, or other coverings. Windows that are less than 5.5 meters (18 feet) above the ground measured from the bottom of the window, or are easily accessible by means of objects directly beneath the windows, must be constructed from or covered with materials that provide protection from forced entry and must be protected by an IDS. The protection provided to the windows need be no stronger than the strength of the contiguous walls.

E. COMSEC equipment (e.g. Type 1 encryption devices) cannot be installed within an LCA unless it is housed within a GSA-approved, Class 5 security container such as the IPS cabinet specifically designed for housing COMSEC or electronic equipment.

- Classified Storage Containers. If existing safes are used for classified material storage, the locks shall be an X-09 lock. If the safe does not have an X-09 lock, the existing lock shall be replaced to meet this requirement. It may be more cost effective to replace one safe per unit with a GSA-approved safe than to retrofit an old safe with questionable serviceability.

- One option is to place the SIPRNET equipment in a GSA-approved Information Processing System (IPS) container. Diebold Security, Hamilton Products Group, and Trusted System all have a GSA-approved IPS container solution for this project; however, a long lead-time is required for delivery. The container shall have a lockable metal box bolted over the container's cable entrance to provide a point for affixing the PDS to the IPS. The box must be included in the IPS order. In addition, the product (IPS and box) shall have GSA-approval for the finished state, e.g., no unauthorized modifications shall be made to the IPS.
- A minimum space of 24-inch W x 32 inch D will be reserved for the locking SIPRNET Node cabinets in the communication closets. The dimensions for the IPS container are 31¾-inch W x 43 inch D x 28½ inch H. The space may be an unused corner in the room. A standard 120Volts AC, 20-ampere receptacle is required to power the UPS in the container.

8.0 SIPRNET COMMUNICATION ROOM

8.1 New Construction Guidance

A. One SIPRNET room will be required for each building, located adjacent to the main telecommunications room, (TR) and opening to the interior of the building.

B. The SIPRNET room will be a minimum of 6 feet by 6 feet, constructed in accordance with AR 380-5, Section III, and Chapter 7. The room requires an IDS.

C. A steel entrance door, with a CD-X09 lock, minimum width of 32 inches to accommodate a cabinet is recommended. If the room is constructed as a CAA (in accordance with AR 380-5), an IPS will not be necessary.

D. The connection to the main TR will be via a single 2-inch trade size steel conduit.

E. All heating, ventilation, and cooling (HVAC) vents or ducts should be provided to maintain local ambient temperatures. The vents must be designed and installed in accordance with the construction requirements of AR 380-5.

F. A communication signal ground buss-bar must be connected to the main TR signal busbar via properly sized ground wire (see MIL-HDBK-419-A).

G. Additional SIPRNET closets are not required on subsequent floors or in other areas. If more distribution points are required, a large lockbox may be wall-mounted in a secondary communications closet.

H. One dedicated 20-Ampere breaker shall be installed for the SIPRNET rack in addition to convenience outlets in the SIPRNET room. A dedicated 20-Ampere breaker for SIPRNET shall be provided in each standard (NIPRNet) TR, to support the SIPRNET distribution to network operation centers or individual drops.

9.0 FACILITY BONDING AND GROUNDING – See Figures B-12 thru B-15

Bonding and grounding systems shall be configured in the telecommunications entrance facility and in each telecommunications closet (utilizing grounding busbars with standoff insulators) in accordance with BICSI Information Transport Systems Installation Manual (ITSIM) 5th edition and ANSI/TIA/EIA-J-STD-607. Telecommunications Main Grounding Busbar (TMGB) shall be tied to acceptable ground source with #2 AWG wire and appropriate two-hole compression crimp-type lug fittings. TMGB with standoff insulators shall be tied to the Telecommunications Ground Busbar (TGB) with #4 AWG wire and appropriate two-hole compression crimp-type lug fittings. The Equipment Racks shall be grounded to the TMGB/TGB using irreversible compression crimp-type lugs and a separate green-jacketed #6 AWG Stranded Copper Conductor. Equipment racks shall be connected to the electrical safety ground only if a separate earth ground is not available. Cable tray and ladder rack shall be bonded in accordance with National Electric Code section 392.7 and NEMA Standard VE 2 section 4.7.

Deviations to these standards shall be submitted to NETWORK ENTERPRISE CENTER (ISB) Branch for approval. Bonding and grounding system shall be tested per ANSI/TIA/EIA and NETWORK ENTERPRISE CENTER standards. Bonding and grounding system shall be labeled per ANSI/TIA/EIA and Fort Bragg NETWORK ENTERPRISE CENTER standards.

10.0 CABLE TAGGING AND TERMINAL STENCILING – See Figure 10-0 below

10.1 Tag Type

Tags shall be made of metallic (i.e. stainless steel, etc.) corrosion resistive material suitable for submersion under water and stamped with the applicable cable information identified below.

10.2 Tag Information

Tag new cables and retag existing cables that are to be re-used. In the cable vault, tag each tip cable. In manholes and handholes, place a tag on each end of the cable as it enters and exits. At splice locations, place a tag on each side of the splice. In the TR, tag cable near cable entry point and at the terminal.

Tag cables as they pass through a pull box or an LB. Tag cables where they are exposed in basements. Tag cable to include cable type, cable number, cable size and type, cable count, the origin manhole or termination on the CO side and the destination manhole or termination location on the field side. Dead complements in cables will not be designated as "DD", "DP", "XDD" or any variation thereof. Identify dead complements with the appropriate "A" (or B, etc) count. Use "A" count after splice where a cable count is no longer terminated to the CO side but the cable pairs continue. Use "B" count at first appearance where same cable count is not terminated to field side and the cable pairs continue.

Example (CO side of splice):
C16, 12-24PF (Cable Number, Cable Size and Type)
1-1200 (Cable Count)
MH4G28 ("from MH")

Example (Field side of splice):
C16, 12-24PF (Cable Number, Cable Size and Type)
1-400 (Cable Count)
A, 401-600 ("A" Count past splice)
601-1200 (Cable Count)
MH4G28 ("To MH")

Example (Field Side to Bldg):
C16, 2-24PF (Cable Number, Cable Size and Type)
401-600
2-1133 (“To Building”)

MH/HH Labeling Example

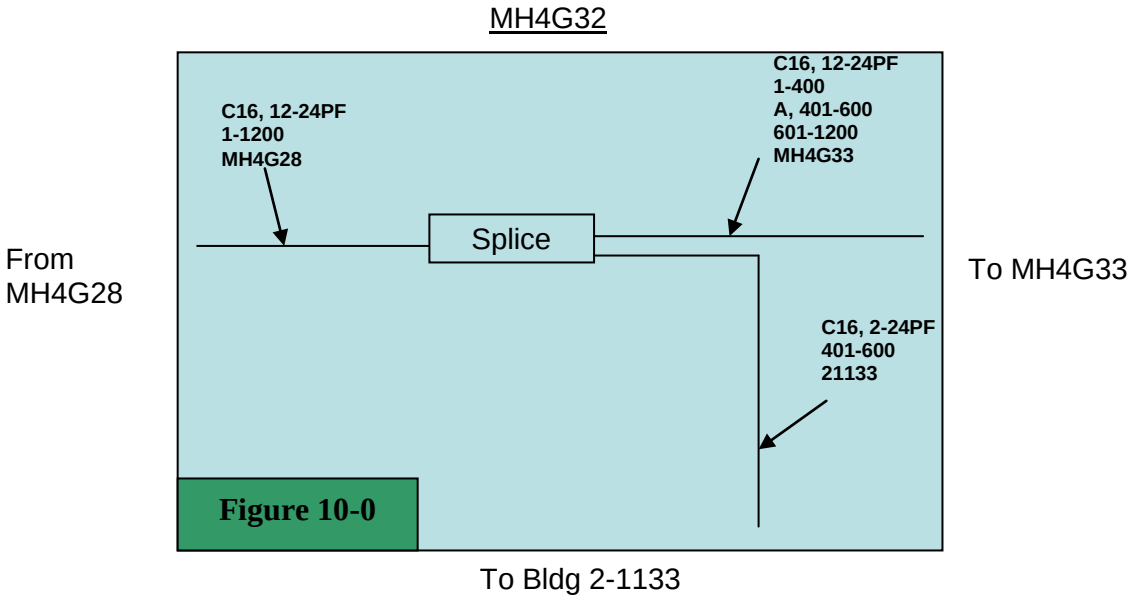

11.0 OUTSIDE PLANT (OSP)

11.1 Maintenance Holes/Hand Holes

Refer to I3A Para 3.8.1.1 for Maintenance Hole (MH) Reference and 3.8.2 for Hand Hole (HH) Reference. Per I3A Fig C-5, MHs shall be 38YJ4 on Ft Bragg and shall contain a moveable ladder. On MHs having more than 1-12" collar, a step or steps shall be added to facilitate safe entry or exit. All newly installed MH collars and frames shall be bolted together to prevent lateral movement. New MHs shall have the number stenciled in 4 inch lettering on the collar of the MH (see figure B-16).

11.2 Maintenance Hole Lids

Ft Bragg NETWORK ENTERPRISE CENTER requires size 32" MH lids unless otherwise specified or approved by NETWORK ENTERPRISE CENTER. MH lids larger than the standard 32" size are extremely cumbersome when providing maintenance on Ft Bragg cable infrastructure. Ref. I3A

11.3 Duct Bank

All new duct banks shall have spacers installed to maintain proper spacing/alignment of ducts. Spacers shall be plastic-type duct spacers that interlock vertically and horizontally. Spacer assembly shall consist of base spacers, intermediate spacers, ties, and locking device on top to provide a completely enclosed and locked-in conduit assembly. Install spacers per manufacturer's instructions, but provide a minimum of two spacer assemblies per 10 feet of conduit assembly. Ducts installed containing a bend of over 10 degrees shall be concrete encased at the location of the bend. When new duct banks are required to be concrete encased, care shall be taken to ensure remaining/unused MH entrances (terminators) remain unobstructed. After a new duct bank installation, ducts shall be mandrelled and cleaned using a wire brush and/or leather washer duct cleaners and plugged using mechanical duct plugs.

11.4 Permanent Tracer Wire

Per I3A, permanent tracer wire shall be installed in all new duct banks. The Network Enterprise Center deems lateral duct banks to be inclusive to "all new duct banks". Furthermore, the Network Enterprise Center requires **direct-burial rated** tracer wire (see Preferred Materials list) installed as centrically as possible alongside the top duct formation. Tracer wire shall be installed as a continuous system from a facility or MH to a facility or MH. Tracer wire shall be terminated by compression type connector to other tracer wires inside MHs.

11.5 Sub-Duct/Innerduct

In reference to I3A, Fabric Mesh Innerduct shall be used for Fort Bragg duct and cable installations. 3 each, 3 inch, 3 cell Maxcell or equivalent must be installed with each fiber cable installation and in one of four newly installed ducts.

11.6 Duct Plugs

To mitigate any confusion of the I3A in regards to the type of duct plugs that shall be installed in vacant ducts, the following type of universal duct plugs are required by the Ft Bragg NETWORK ENTERPRISE CENTER. Vacant ducts shall be sealed with mechanical screw-type, reusable duct plugs.

11.7 Copper Cable Splicing

New cable installed in the Fort Bragg MH and ducting infrastructure shall be spliced utilizing a stainless steel splice enclosure inside MHs and in accordance with the following guidelines:

Copper Cable Size	Splice Location
001 – 600 pr	Every other MH
600 pr or greater	Every MH

11.7 Cable Assignment

New cable installed in the MH and ducting infrastructure shall be installed in the lowest available vacant duct. The orientation of installed cables shall be such that when facing the DCO, the FOC shall enter the MH through the lowest available duct on the right-hand side of the MH and exit the MH using the mirroring duct assignment at the opposite side of the MH. Copper cable shall be arranged so that it routes on the left-hand side of the MH using duct assignment that mirror each other on the opposite end. Cables routed through MHs shall utilize the same ducting assignment throughout the cable route the entire span of the cable run.

11.8 OSP Building Entry

In accordance with the I3A, outside plant copper cable shall be terminated on the Protected Entrance Terminal (PET). Cross-connects can then be placed from the PET to the first set of 110-type terminal blocks as needed. Figures B-5 and B-6 of Appendix B in the I3A provides detailed guidance on how the PET to 110 blocks shall be arranged. The Ft. Bragg NETWORK ENTERPRISE CENTER requires PET to 110-type terminal block installation to be accomplished in accordance with Figure B-5 of the I3A. This would require the OSP cable to be terminated on the PET input side and the output side of the PET to be terminated on an external 110-type block via CAT3 – 25/50/100 pair Tie Cable. Figure B-6 of this IDC provides a visual depiction of a typical PET to 110-type terminal block arrangement.

12.0 SYSTEM FURNITURE

When considering System Furniture for admin spaces, the different classified systems must be taken into consideration. Power, SIPR, and NIPR could potentially be housed within the systems furniture channels. Stringent separation restrictions must be adhered to for this practice.

A systems furniture module, (see figure B-17**)**, must have a separate channel for each cable category. They must enter the piece typically through a ceiling mounted power pole or underneath via a raised floor system and then channeled through the furniture.

Power is typically directed to the floor channel and is then terminated. NIPR enters through a separate power pole and is channeled to the mid "Beltline" channel and SIPR, if installed, enters in through its own power pole system and is channeled through the top channel.

This configuration will provide all separation necessary to comply with Tempest requirements. Because of the nature of this furniture, infrastructure space is a valuable commodity that is somewhat overlooked. Extended Depth faceplates, (see figure 13-0 below**),** when installed, ensure the proper bend radius is obtained to meet requirements for connectivity and performance.

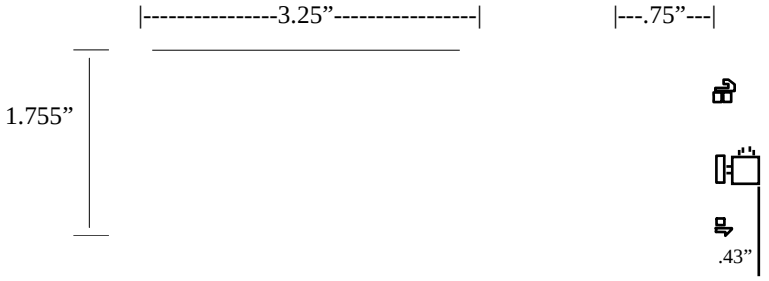

FACEPLATE

4-port only for shallow or powered channels
(fits openings of Approximately 1.38”x2.70”)

Figure 13-0

1. **Extended-Depth: 1.80”(H) x 3.25”(W) x 1.18”(D)**
2. **Meets or exceeds all applicable standards: UL listed; complies with NETWORK ENTERPRISE CENTER**
   Article 800 and TIA/EIA-568-C; and meets FCC Part 68

APPENDIX A. FORT BRAGG PREFERRED MATERIALS LISTS

ISP Preferred Materials List

Item	Manufacturer	Part Number	Comments
Extended Depth Faceplates	Leviton	49900-E*4	4 port only for shallow channels
Horizontal Cable Mnaager	Panduit	WMP1E	2U Front and Rear
Vertical Cable Managers	Panduit	WMP45E	Front and Rear

SIPR/PDS Preferred Materials List

Item	Manufacturer	Part Number	Comments
Padlock	Sargent & Greenleaf Inc.	80177-103	Combination Padlock
File cabinet	Hamilton	7110-00-920-9193	Class 6 Legal Size Single Lock, 5-Drawer Capacity
X-09 Combination Lock	Kaba Mas	CDX-09	CDX-09 combination lock
PDS box	Performance Metal	9930-203-CB-4635-02	Lockbox, custom hinged door hasp 6.75 inch H X 5 inch D
SIPR/PDS Safe	Hamilton	IPS-30-39-24	Information Processing Security Container (Safe) with 19 inch rack
Lock Box	City Electric	664JH009.	Lockbox custom hinge and hasp
APC UPS	APC	PS450	APC Powerstack 450VA 1U 120V
3M EPOXY	3M	021200-82262-9	2 Part epoxy DP 270
3M Epoxy Applicator	3M	62-9744-9930-3	EPX Plus II
3M Epoxy Applicator	3M	62-9164-9931-2	Mixing Nozzels

OSP Preferred Materials List

Item	Manufacturer	Part Number	Comments
OSP Fiber Cable – Direct Buried	Corning	SMF-28e	Double-Jacket/Single-Armor Cable, 2-288 Fibers
OSP Fiber Cable - underground In Ducts	Corning	**xxxEW4-T4101D20**	ALTOS All-Dielectric Gel-Free Cable, 2-288 Fibers
Buffer Fan out kit 12F	Corning	FAN-BT25-12	
Closet Connector Housing	Corning	CCH-02U	Need to order loaded with SC panels
Panel, 6 duplex SC	Corning	CCH-CP12-59	to fill CCH-02U
SC Unicam Conn	Corning	95-200-41	standard connector for Bragg
Pretium Connector Housing 4U	Corning	PCH-O4U	for ADN termination - need to order loaded with LC panels
LC Unicam Connectors	Corning	95-200-99	for termination in ADN
Fiber storage unit for Connector housing	Corning	PC4-SLK-D24	Slack storage for pretium housing
OSP Copper Cable, 25 pair/24 gauge		09-062-02	size appropriately for installation requirement
BEP, 25 pr	Marconi	F019432	size appropriately for cable pair size
Protector Modules (for BEP)	Marconi	4C1S	Carbon protectors for BEP
Fiber- Coyote Splice Case Kit	Preformed Line Products	8006561	Use appropriate size for fiber optic cable being installed. DO NOT ENCAPSULATE. Part number is for a 8.5" X 22" closure with 1-3 section end plateand 1 blank end plate. Order organizer and splice trays as required
Organizer, Fiber, Vert	Preformed Line Products	8001049	order and size appropriately for splice case
Splice tray	Preformed Line Products	8001021	order and size appropriately for splice case
Copper - Stainless Steel Splice Case Kit w/ Drillable End Plates W/Bonding	Preformed Line Products	8000630	Use appropriate size for copper cable being installed. DO NOT ENCAPSULATE. Part # is for a 9.5"X 28" case kit with bonding and drillable 2-section end plates.

OSP Preferred Materials List

Item	Manufacturer	Part Number	Comments
25 Pair splicing module	3M	3M-710-SC1-25	Order amount appropriate for splice plus filler strips
Copper Tracer Wire 12 Gauge/Solid	Pro Line	743040647	Part # is for: Orange color/12 ga/ Solid/2500ft
MaxCell Fiber Mesh Innerduct	MaxCell	MXC3456BK5300	3 inch, 3 cell (Blk, Red and Green) stitching for subdividing OSP 4 inch conduits
MaxCell Fiber Mesh Innerduct		MXC3456RD5300	
MaxCell Fiber Mesh Innerduct		MXD3456GR5300	Detectable w/tracer wire
Hydra-Seal S-60 WTF (Wide Temp Foam)	A-D Technologies	S-60WTF 6	Conduit Sealing Kit WESCO

APPENDIX B. INFRASTRUCTURE SUPPORT DIAGRAMS

Certification Field Tester, continued

- Select test configuration.
  - Permanent link
  - Channel

Permanent link test configuration

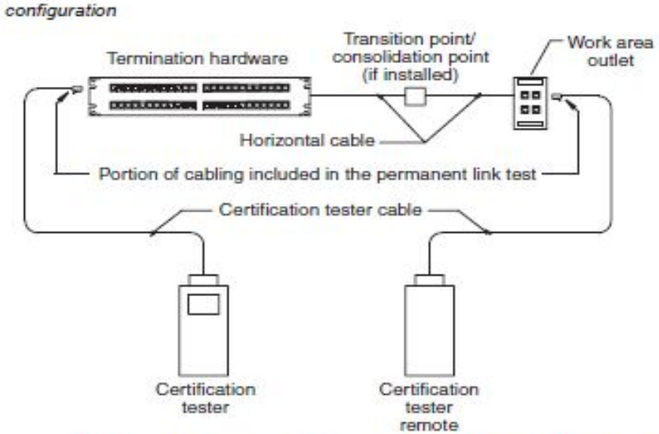

NOTE: The permanent link excludes both the cable portion of the field test instrument cord and the connection to the field test instrument.

Figure B-1. Permanent Link vs Channel Test Configuration

Channel test configuration

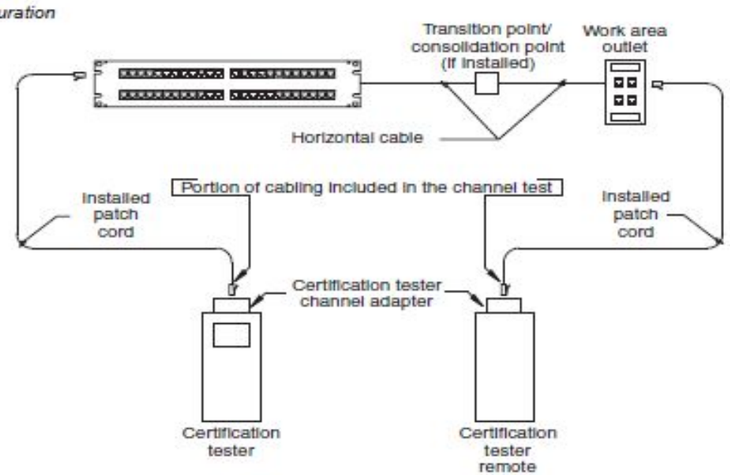

NOTE: The channel includes the customer's equipment cords plugged into the field test instrument and excludes the connections to the field test instrument on each end.

THIS PAGE INTENTIONALLY LEFT BLANK

Ladder Racks and Cable Trays

Materials

Ladder racks and cable trays are available in many sizes and configurations. Some are solid bar stock; others are tubular; while some are manufactured from rod stock. There are enclosed and open cable trays. Ladder racks and cable trays are manufactured from steel and aluminum. Typically, cable trays provide a pathway to house and support cables installed between TRs and from TRs to work areas. They are used to support cables from one wall to another within a TR or ER. Article 392 covers the installation of cable trays. This chapter specifically addresses the installation of a ladder rack within a TR. However, the principles involved can be applied to installing cable trays between TRs as horizontal pathways. The following are examples of open tubular and rod-stock ladder racks and cable trays. For both types, a metal bottom can be installed along with a metal cover to convert it to an enclosed system.

Tubular Ladder Rack

In this type of construction, the ladder rack is constructed of tubular stock. The inside of each side rail and cross rung of the tray is hollow. This type is lighter than the solid-bar stock construction and easier to handle in elevated work areas. Solid stock may offer a stronger cabling installation, but in most cases, the tubular stock will provide the weight-loading factor required for most installations. The tubular ladder rack is manufactured with a depth of 38 mm (1.5 in); the width varies from 152 mm (6.0 in) to a maximum of 914 mm (36 in).

Figure B-2. Ladder Rack

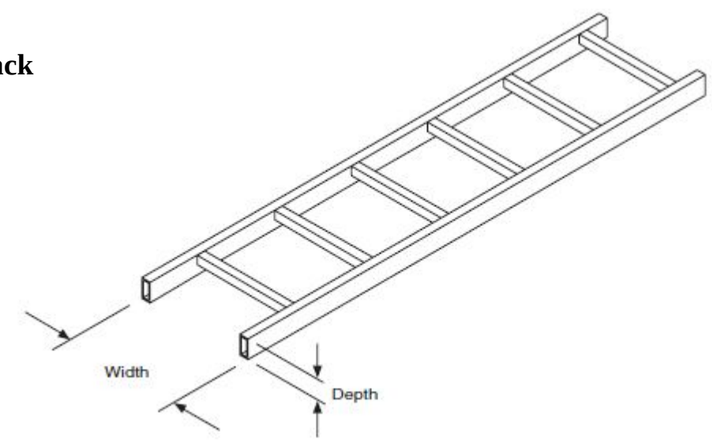

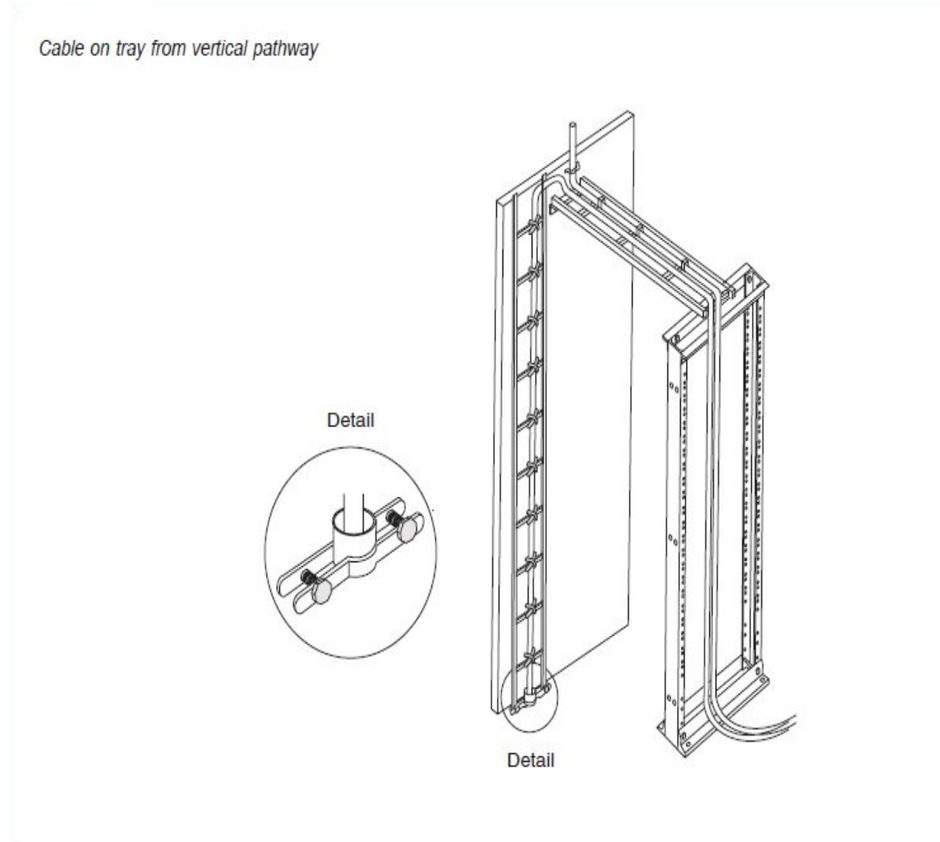

Figure B-3. Ladder Rack Installation Example

Figure B-4: Guidelines for adapting designs to conduits with bends:

NOTE: Consider an offset as equivalent to a 90-degree bend.

If a Conduit Run Requires...	Then...
More than two 90-degree bends	Provide a pull box between sections with two bends or less.
A reverse bend (between 100 and 180 degrees)	Insert a pull point or pull box at each bend having an angle from 100 to 180 degrees.
More than two 90-degree bends between pull points or pull boxes	For each additional bend, derate the design capacity by 15 percent or use the next larger size of conduit.

No more than two 90-degree bends are allowed in any one conduit segment. A third bend may be acceptable in a conduit segment without derating the conduit's capacity if:

- The run is not longer than 10 m (33 ft), or
- The conduit size is increased to the next trade size, or
- One of the bends is located within 305 mm (12.0 in) of the cable feed end. (This exception only applies to placing operations where cable is pushed around the first bend).

NOTE: In practice, a third bend should not be used unless there is no way to avoid it.

Pull Boxes for Conduits

Installing Boxes

The telecommunications installer should install:

- Pull boxes in easily accessible locations.
- Horizontal cabling boxes immediately above suspended ceilings.

NOTE: The following pull box information applies to inside plant cables only.

For direct access to a box, provide a suitable, marked, hinged panel (or equivalent) in the suspended ceiling. This access panel can also serve as the cover for the box.

Recommended box configurations

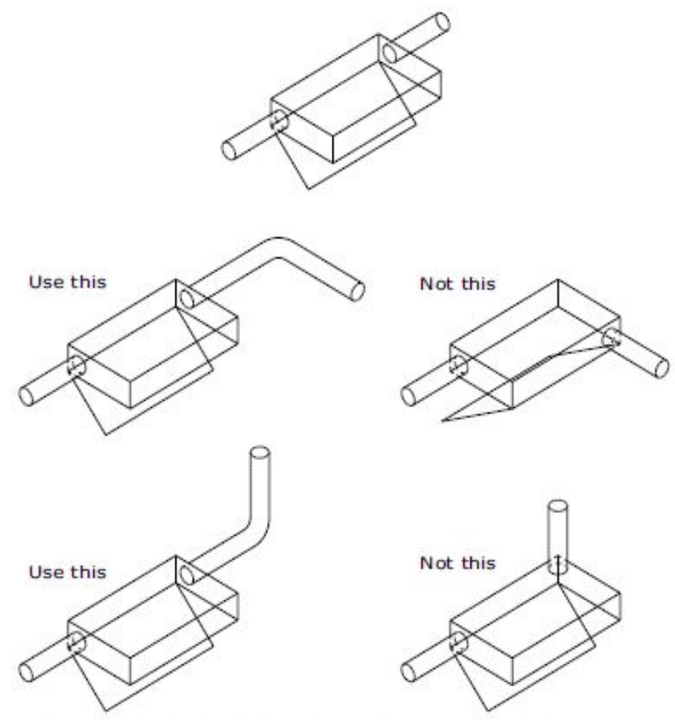

Figure B-5. Pull Box Installation Guidelines

Figure B-6. Fort Bragg Copper Wall Field Diagram

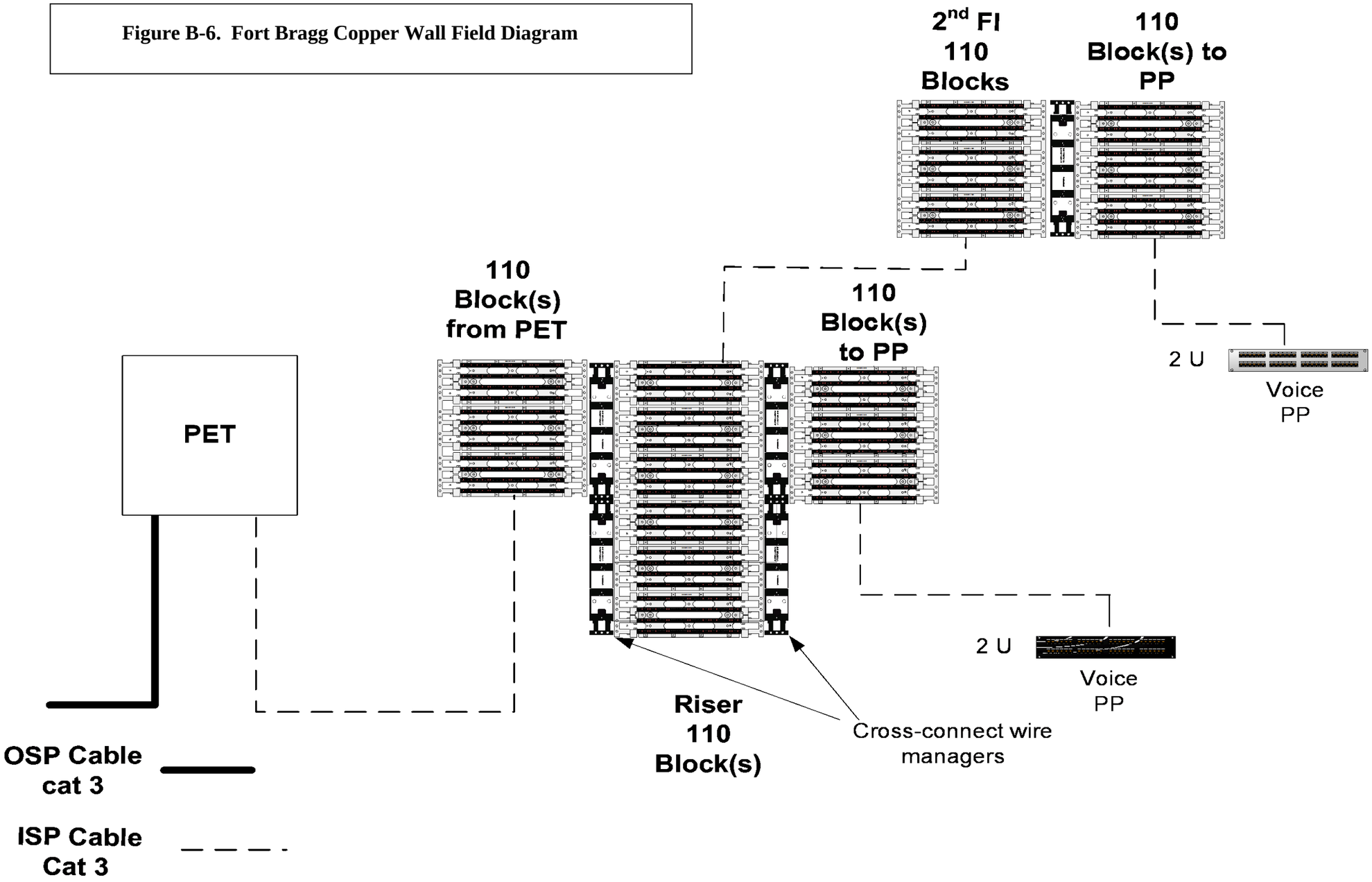

Typical TR Wall Field

Example of equipment layout only.

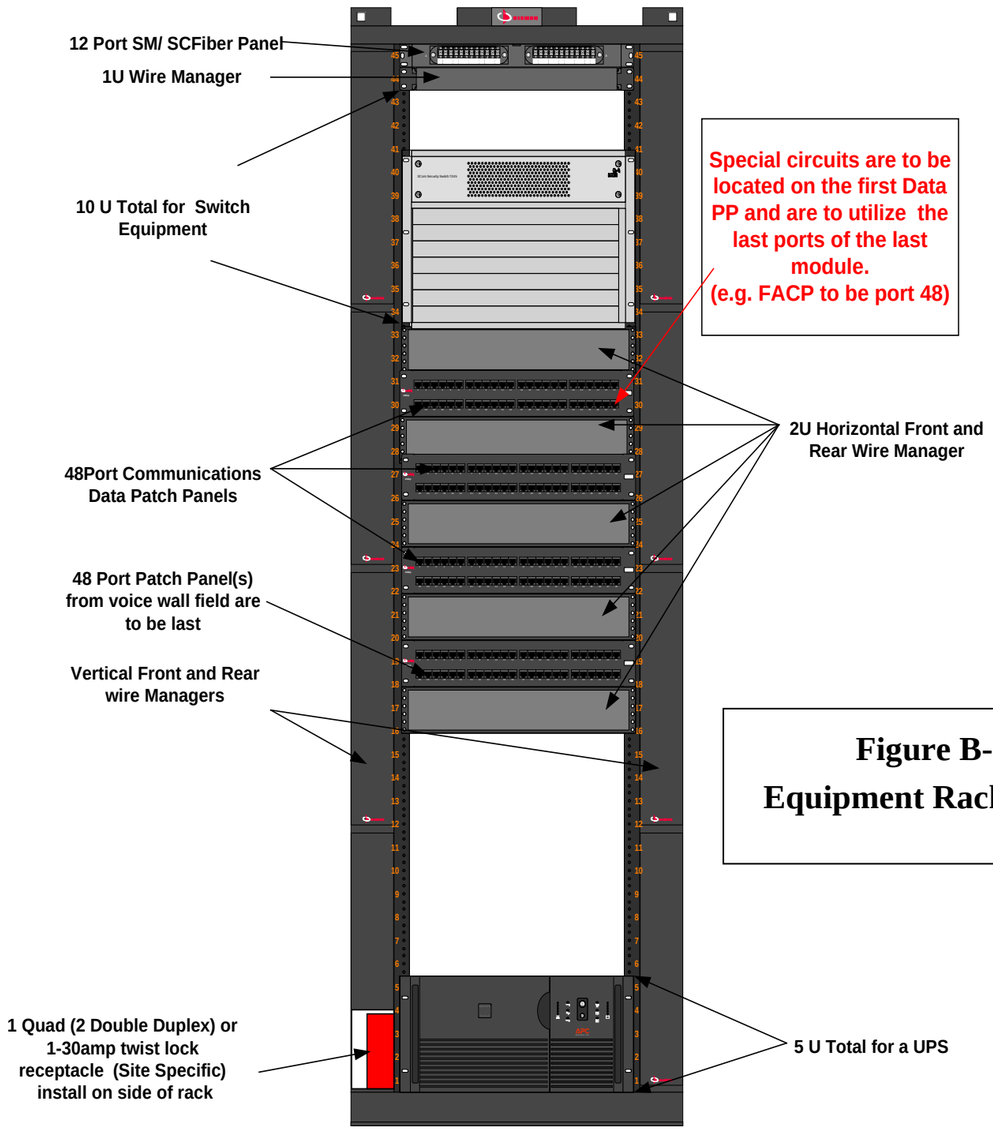

Figure B-8.
Equipment Rack Layout

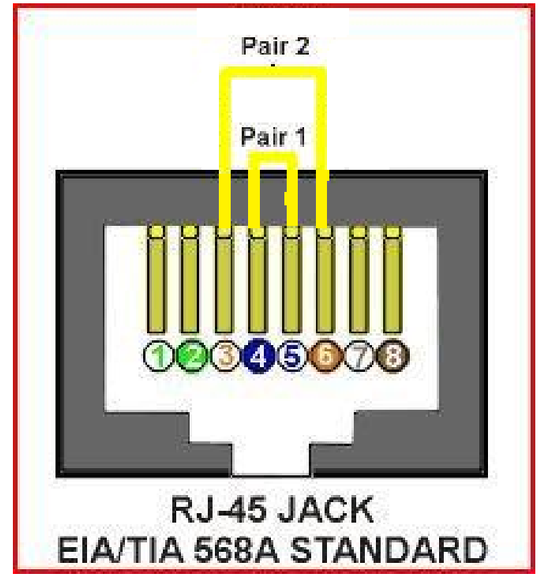

Figure B-7. Voice Pinout Diagram

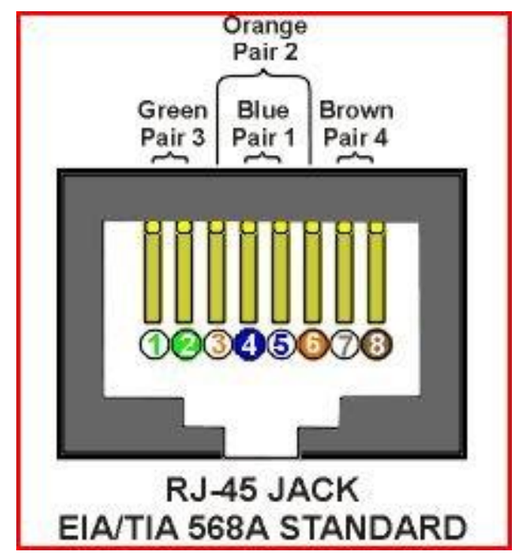

Figure B-9. T-568A Pinout

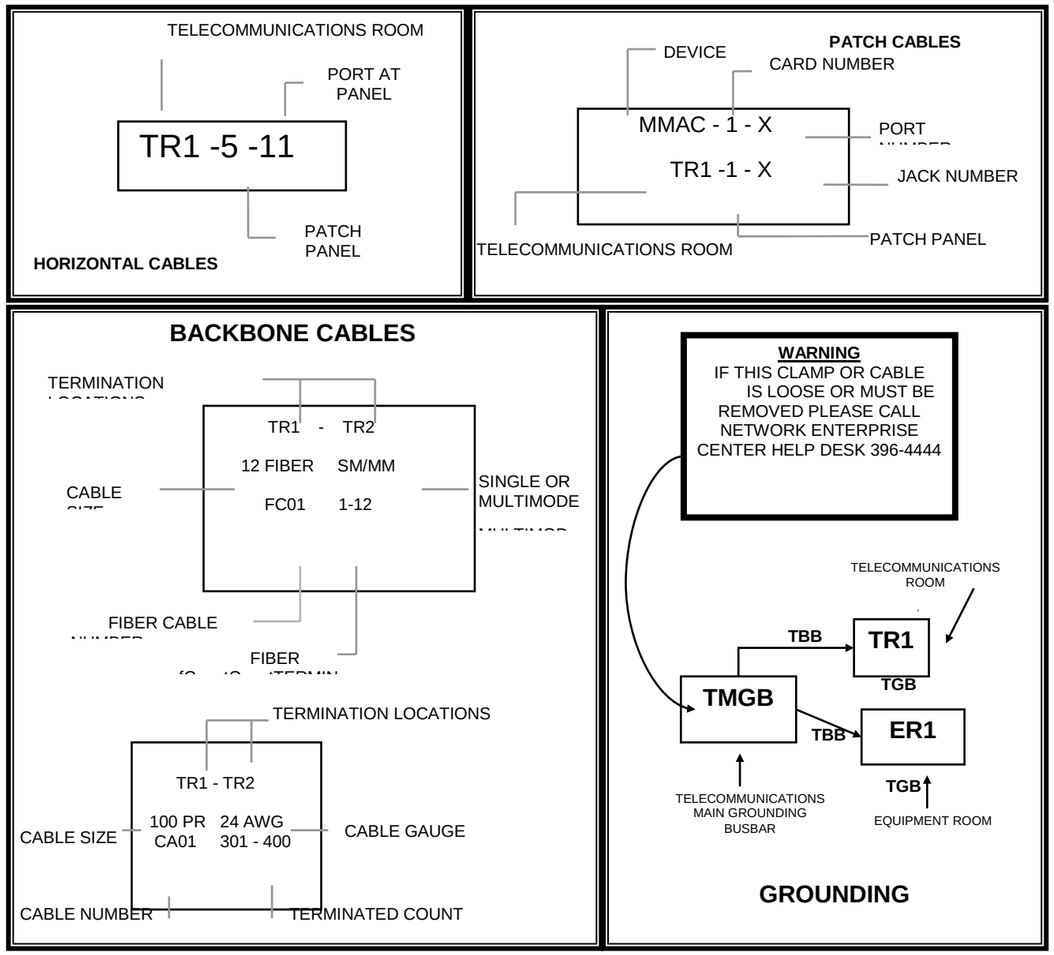

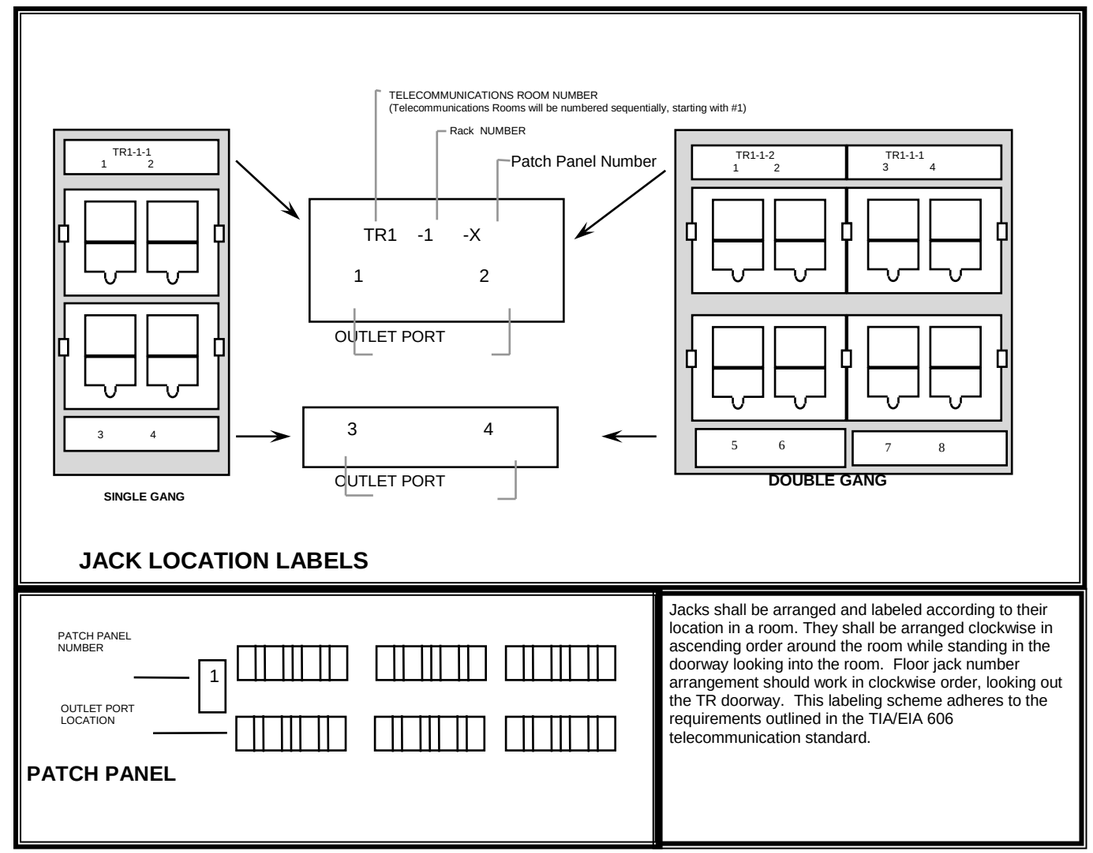

Figure B-10. Fort Bragg Labeling Scheme

When standing in the doorway (facing out) of the TR in a Building, start numbering your WAO's from left to right, clockwise around the building. **If clarification is needed, check with The Network Enterprise Center Project Manager or Quality Assurance division.**

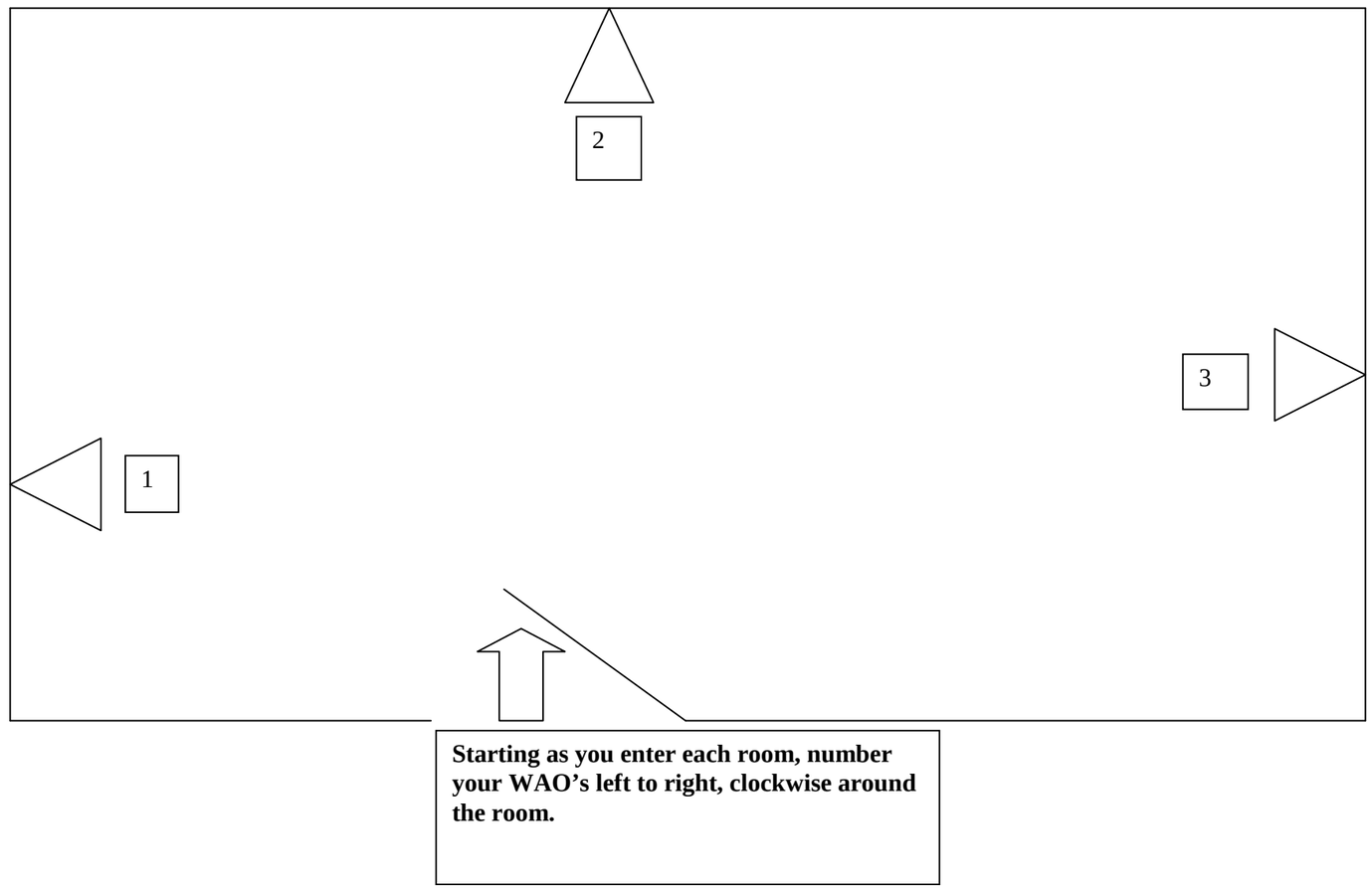

Figure B-11. Fort Bragg Labeling Scheme (Cont…)

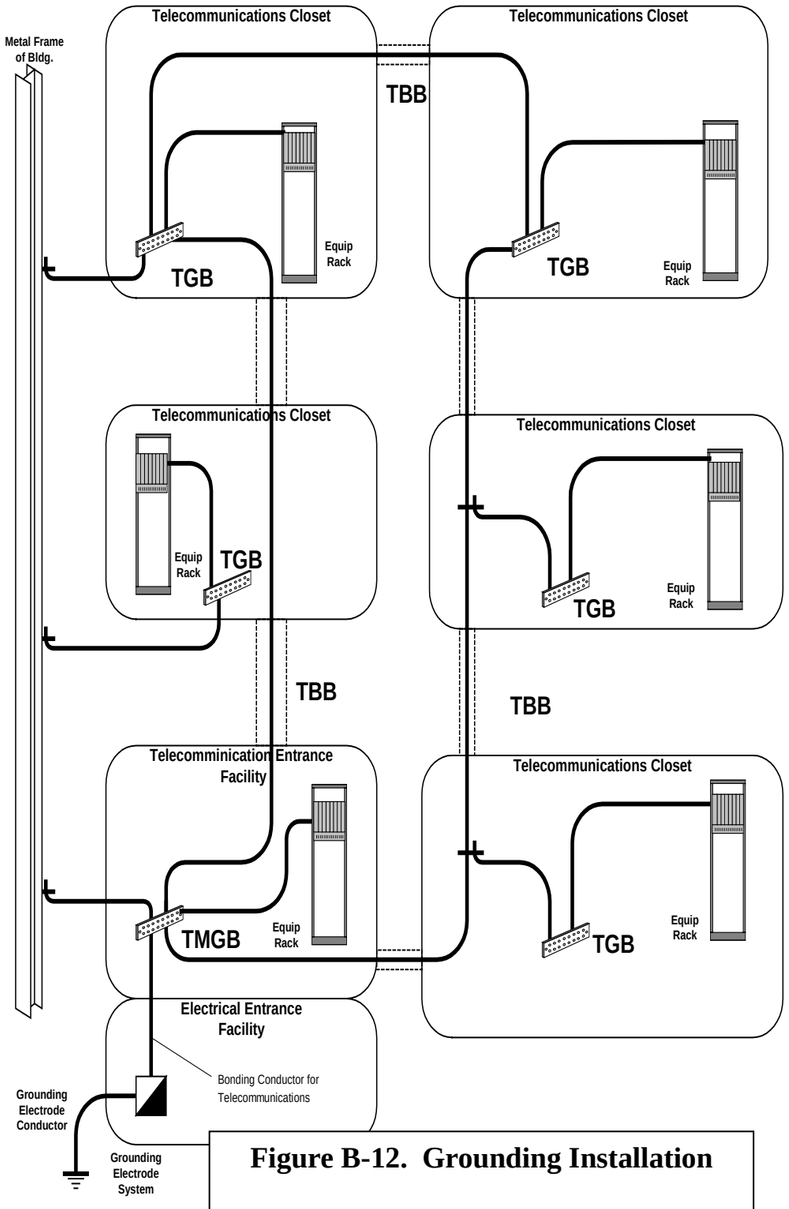

TGB = Telecommunications Ground Busbar

TBB = Telecommunications Backbone Busbar

TMGB = Telecommunications Main Ground Busbar

Figure B-12. Grounding Installation

Figure B-13a. Grounding Electrode Sizing Chart

Size of Largest Ungrounded Service-Entrance Conductor or Equivalent Area for Parallel Conductors[a] (AWG/kcmil)		Size of Grounding Electrode Conductor (AWG/kcmil)	
Copper	Aluminum or Copper-Clad Aluminum	Copper	Aluminum or Copper-Clad Aluminum[b]
2 or smaller	1/0 or smaller	8	6
1 or 1/0	2/0 or 3/0	6	4
2/0 or 3/0	4/0 or 250	4	2
Over 3/0 through 350	Over 250 through 500	2	1/0
Over 350 through 600	Over 500 through 900	1/0	3/0
Over 600 through 1100	Over 900 through 1750	2/0	4/0
Over 1100	Over 1750	3/0	250

Figure B-13b. Sizing of the Telecommunications Bonding Backbone Conductor

The TBB shall be a copper conductor. The minimum TBB conductor size shall be a No. 6 AWG. The TBB should be sized at 2 kcmil per linear foot of conductor length up to a maximum size of 3/0 AWG. The TBB may be insulated. If the TBB is insulated, the insulation shall meet the fire ratings of its pathway. The sizing of the TBB is not intended to account for the reduction or control of electromagnetic interference.

Sizing of the TBB	
TBB length linear m (ft)	TBB Size (AWG)
less than 4 (13)	6
4 – 6 (14 – 20)	4
6 – 8 (21 – 26)	3
8 – 10 (27 – 33)	2
10 – 13 (34 – 41)	1
13 – 16 (42 – 52)	1/0
16 – 20 (53 – 66)	2/0
greater than 20 (66)	3/0

THIS PAGE INTENTIONALLY LEFT BLANK

Bonding Equipment, Racks, and Cabinets

There are three methods to bond the equipment located in the equipment rack or cabinet to the telecommunications bonding system (see Figure 3.6).

NOTE: Many types of equipment do not require individual bonding conductors and as such do not have an attachment point for bonding conductors. Equipment that does not have attachment points for bonding conductors may be bonded either through the equipment rail or the ac power cord. Refer to the manufacturer's documentation for guidelines.

Example of three methods to bond racks to ground

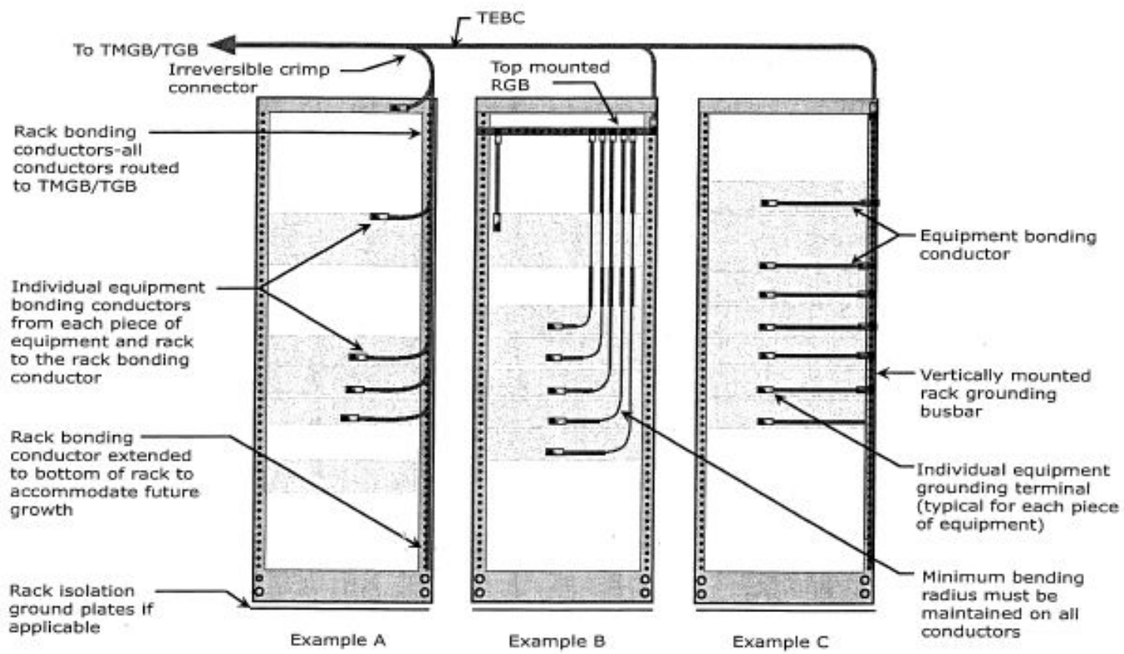

RGB = Rack grounding busbar
TEBC = Telecommunications equipment bonding conductor
TGB = Telecommunications grounding busbar
TMGB = Telecommunications main grounding busbar

Figure B-14. Rack Bonding Installation

Figure B-15. The conduit brackets may be the type that provide electrical continuity between the conduit and the channel stock to provide a bonding path between conduits and a bonding conductor to be installed from the channel stock. This should then be bonded to either the telecommunications main grounding busbar or to a telecommunications grounding busbar. In places where a small number of conduits are installed, a grounding bushing shall be installed at the end of each conduit for the attachment of a 6 AWG (4.1 mm (0.16 in)) copper wire, which conNetwork Enterprise Centerts to the TMGB or TGB. Conduits in close proximity to each other can be bonded together. One conduit in the string must be bonded to the TMGB or TGB.

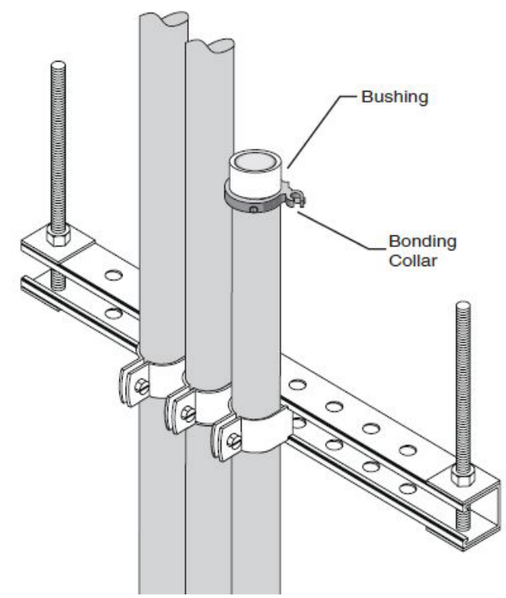

All Manholes are to be stenciled as shown below

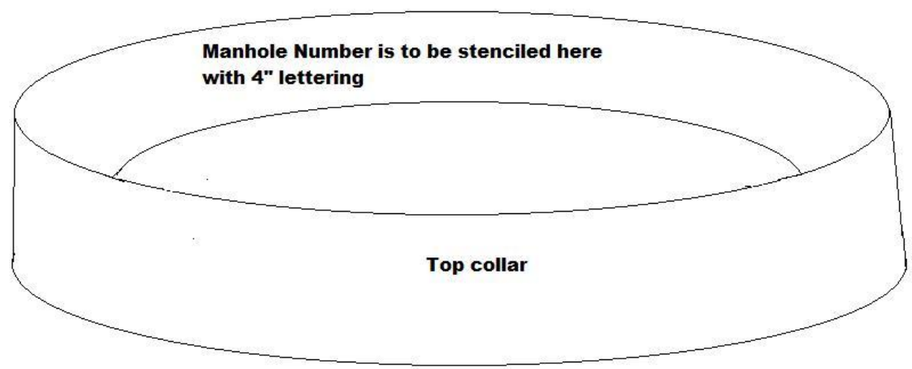

Figure B-16. Maintenance Hole Stenciling Location

Figure B-17. Modular Furniture Design Example

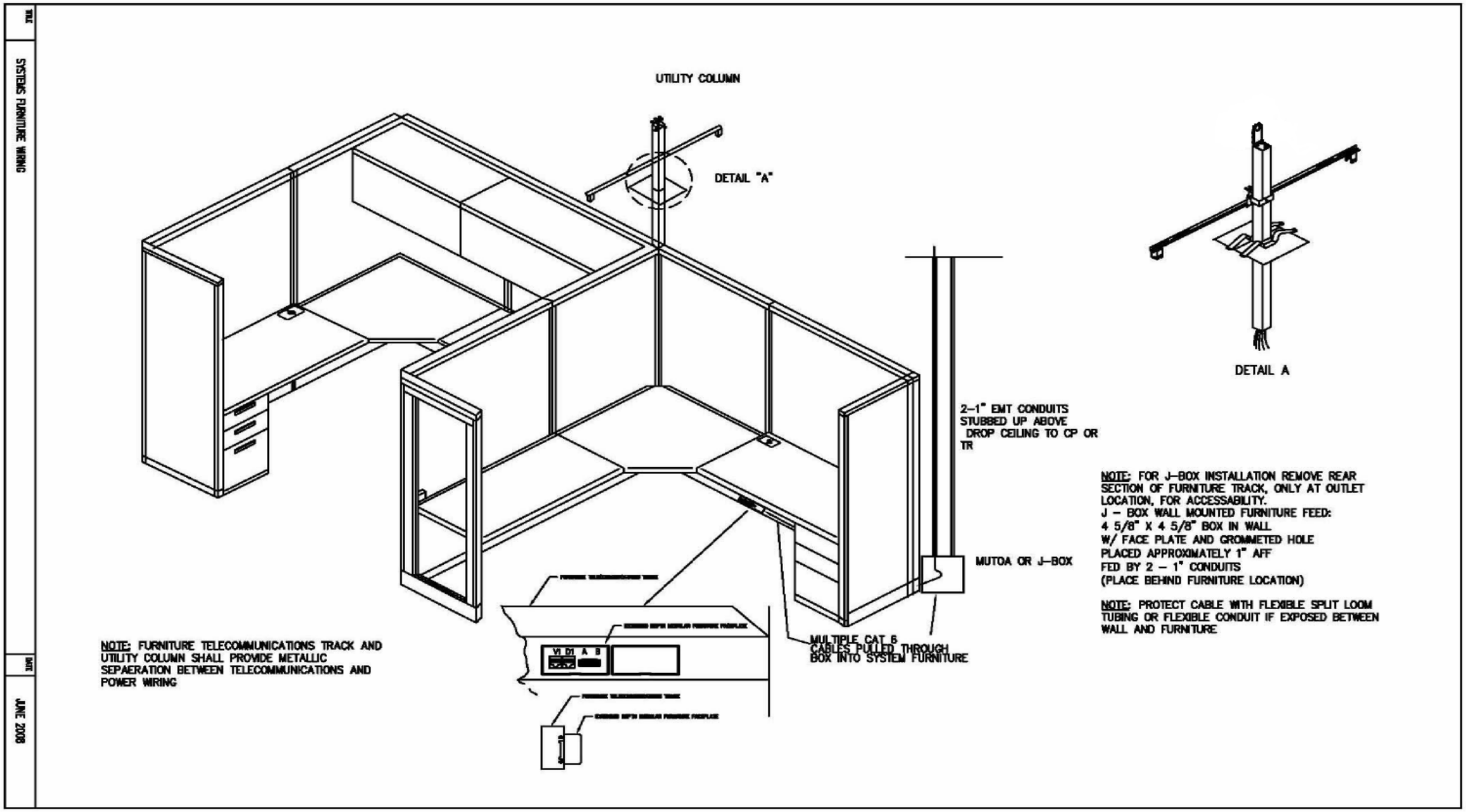

APPENDIX C. GLOSSARY OF ACRONYMS AND TERMS

AC	Alternating Current
ADN	Area Distribution Node
ANSI	American National Standards Institute
AR	Army Regulation
AWG	American Wire Gauge
BICSI	Building Industry Consulting Service International
CAA	Controlled Access Area
COMSEC	Communications Security
DAA	Designated Approving Authority
DPW	Director of Public Works
EMT	Electrical Metallic Tubing
EUB	End User Building
GSA	General Services Administration
IA	Information Assurance
IDS	Intrusion Detection System
IPS	Information Processing System
LCA	Limited Control Access (also Limited Control Area)
MDN	Main Distribution Node
NEC	National Electric Code
NIPRNet	Non-Classified but Sensitive Internet Protocol Router Network
NSTISS	National Security Telecommunications and Information Systems Security
NSTISSAM	National Security Telecommunications and Information Systems Security Advisory Memorandum
PDS	Protected Distribution System
PM	Program Manager
POC	Point of Contact
RSU	Remote Switching Unit
S	Secret
SIPRNET	Secret Internet Protocol Router Network
TACLANE	Tactical LAN Encryptor
TGB	Telecommunications Ground Bus
TMGB	Telecommunications Main Ground Bus
TR	Telecommunications Room
TS	Top Secret
TS/SCI	Top Secret / Sensitive Compartmentalized Information
UAA	Uncontrolled Access Area
UL	Underwriters Laboratory
UPS	Uninterruptible Power Supply

10GBASE-T (10 Gigabit baseband over twisted pair) – This IEEE standard, 802.3an, defines 10 Gigabit Ethernet running 10Gbps over balanced twisted pair cabling.

ANSI (American National Standards Institute) – ANSI oversees the creation, circulation and use of standards and guidelines that directly impact businesses in various sectors. ANSI is also actively engaged in accrediting programs that assess conformance to standards.

Attenuation – The loss of volume during transmission, or decrease in the power of a signal, light beam, or light wave. Attenuation is the opposite of gain and is measured in decibels (dB).

AWG (American wire gauge) – AWG is the standard measuring gauge for nonferrous conductors (i.e., non-iron and non-steel). Gauge measures the diameter of a conductor (thickness of cable).

AXT (alien crosstalk) – AXT is electromagnetic noise that can occur in a cable run alongside other signal carrying cables. The term "alien" arises from the fact that this form of crosstalk occurs between different cables in a group or bundle, rather than between individual wires or circuits within a single cable.

Bandwidth – The difference between the highest and the lowest frequencies of a transmission channel (path for information transmission). Bandwidth identifies the amount of data that can be sent through a given channel. Measured in hertz (Hz); higher bandwidth numbers mean higher data capacity.

Bend Radius – The amount of bend that can occur before a cable may sustain damage or increased attenuation.

BICSI (Building Industry Consulting Services International) – BICSI is a non-profit professional association for the promotion of telecommunications industry standards.

Category 5e (enhanced category 5 or CAT 5e) – CAT 5eis a standard for balanced twisted pair cable and components supporting signaling rates up to 100 MHz. CAT 5e is intended to support systems up to 1000BASE-T or Gigabit Ethernet up to distances of 100 m (328 ft).

Category 6 (CAT 6) – CAT 6 is a standard for balanced twisted pair cable and components supporting signaling rates up to 250 MHz . CAT 6 is intended to support systems up to 1000BASE-T or Gigabit Ethernet up to distances of 100 m (328 ft).

Category 6A (augmented category 6 or CAT 6A) – CAT 6A is a standard for balanced twisted pair cable and components supporting signaling rates up to 500 MHz. CAT 6A is designed to support 10GBASE-T or 10 Gigabit Ethernet up to distances of 100 m (328 ft).

Category of Performance – Cabling and cabling component standards adopted by the telecommunications industry.

Channel – In the horizontal cabling portion of a structured cabling system, the channel contains all of the elements of the permanent link, plus the equipment cords at the horizontal cross-connect (HC) and the patch cords in the work area. Channel-rated Category-rated structured cabling components are said to be channel-rated if, when installed as a system in an industry-defined channel, they meet all of the transmission and noise characteristics defined in the standard. Compare with Component-rated.

Compliance – A wiring device that meets all characteristics of a standard is said to be in compliance with that standard.

Component-rated – Category rated structured cabling components are said to be component rated if they exceed all of the transmission and noise characteristics defined in the standard for an individual structured cabling component. Component specifications are more stringent than channel specifications and may provide greater permanent link and channel test margins. Compare with Channel-rated.

Conductor – Any substance, usually a wire or cable that can carry an electrical current.

Connecting Block – Also called a terminal block, punch-down block, quick-connect block, or cross connect block, this plastic block contains metal wiring terminals to establish connections from one group of wires to another. Usually each wire can be connected to several other wires in a bus or common arrangement. There are several types of connecting blocks: 66, 110, etc.

Connector – A device that connects wires or fibers in cable to equipment or other wires or fibers. Wire and optical connectors most often join transmission media to equipment or cross connects. Connectors are sometimes referred to as jacks; but although all jacks are connectors, not all connectors are jacks.

Consolidation Point – An optional location between an ER or TR and the workstation for interconnection of horizontal cables.

Data Center (DC) – A data center is a facility used for housing a large amount of electronic equipment, typically servers, computers, data storage devices, and communications equipment. Data centers are designed to assure that the equipment and data housed in them are protected from environmental hazards and security breaches. Data centers can be private, serving a single company, or a public "utility" serving a variety of companies.

dB (decibel) – A dB is a unit of measure of signal strength, usually the relationship between a transmitted signal and a standard signal source. Every 3dB equals 50% of signal strength, so therefore a 6dB loss is a loss of 75% of total signal strength.

EIA (Electronic Industries Alliance) – The EIA is a trade organization made up of manufacturers that set standards for its member companies.

Ethernet – Leading local area network (LAN) protocol used for connecting computers, printers, workstations, terminals, etc. within the same building. Ethernet is a physical link and data link protocol that operates over twisted pair wire. See IEEE 802.3x.

ER (equipment room) – An ER is a centralized space that houses telecommunications equipment. ERs generally serve an entire building or campus, while TRs (telecommunication rooms) serve one floor of a building or a portion of a floor. An ER may contain active equipment, cross-connect equipment, and building systems (e.g. life safety, security, electrical and HVAC).

FCC (Federal Communications Commission) – The FCC is an independent United States government agency. It was established by the Communications Act of 1934 and is charged with regulating interstate and international communications by radio, television, wire, satellite and cable. The FCC's jurisdiction covers the 50 states, the District of Columbia, and U.S. possessions.

FTP (foiled twisted pair) – FTP is balanced twisted pair cable with an overall foil shield and drain wire. FTP is also called screened twisted pair (ScTP) cable.

F/UTP (foiled screened with unshielded twisted pairs) – Overall shielded cable with no shield on individual twisted pairs.

Gain – An increase in signaling power when an electric device boosts the signal; measured in decibels (dB).

Gigabit – When used to describe data transfer rates, Gigabit refers to 10 to the 9th power (1,000,000,000) bits. Gigabit Ethernet, abbreviated GbE, supports data transfer rates of 1 Gigabit (1,000 megabits) per second. The first Gigabit Ethernet standard (802.3z) was ratified by the IEEE 802.3 Committee in 1998.

HC (horizontal cross-connect) – The HC is a location for the cross-connect of horizontal cabling to other cabling and equipment.

IC (intermediate cross-connect) – The IC is a cross-connect point located between the MC (main cross-connect) and the HC in inter-building backbone cabling.

IDC (insulation displacement connection) – An IDC allows the termination of a conductor without stripping the conductor's insulation. When the conductor is inserted into the contact, the insulation is displaced, creating contact between the conductor and the IDC, producing a gas-tight connection.

IEEE (Institute of Electrical and Electronics Engineers) – IEEE is a publishing and standards-making body responsible for many standards used in LANs.

IEEE 802.3 – IEEE 802.3 is a collection of IEEE standards defining the physical layer and the media access control (MAC) sub layer of the data link layer of wired Ethernet. This is the most common local area network specification.

IEEE 802.3an – IEEE 802.3 is a standard for 10GBASE-T released in 2006 to provide 10 gigabit per second transmission over balanced twisted pair cables up to 100 meters (328 ft).

Impedance – The total opposition (i.e. resistance and reactance) a circuit offers to the flow of alternating current. It is measured in ohms, and the lower the ohmic value, the better the quality of the conductor.

Insertion Loss (IL) – The difference in the amount of power received before and after something is inserted into the circuit.

Interconnect – A circuit administration point, other than a cross-connect or an information outlet, that provides capability for routing and rerouting circuits. It does not use patch cords or jumper wires, and typically is a jack-and-plug device used in smaller distribution arrangements or that connects circuits in large cables to those in smaller cables.

ISO (International Standards Organization) – ISO is the world's largest developer and publisher of international standards. It is a non-governmental organization (NGO) network of national standards institutes in 157 countries, based in Geneva, Switzerland.

Jacket (also cable jacket or sheath) – The outer covering applied over internal cable elements for protection.

LAN (local area network) – A LAN is a computer network covering a small physical area, generally a single building or contiguous campus. LANs are characterized by higher data-transfer rates (compared to a WAN or wide area network) and lack of leased telecommunications lines.

Mbps Megabits Per Second – One million bits per second.

MC (main cross-connect) – The MC is the cross-connect in the ER (equipment room) for connecting entrance cables, backbone cables and equipment cables.

MHz (megahertz) – MHz is a unit of frequency denoting one million hertz (1,000,000 cycles per second).

Mud Ring – Industry jargon for a plaster ring/frame mounted in a wall to support a telecommunications outlet such as a faceplate. Essentially, mud rings are backless junction boxes.

NEC (National Electric Code) – The NEC or NFPA 70 (NFPA is the National Fire Protection Association, the organization that publishes the Code) addresses safeguards for people and property from electrical hazards. The NEC also specifies fire resistance and smoke ratings for building materials and is recognized and enforced in the United States. NEC article 800 addresses requirements for communications circuits.

NEXT (near-end crosstalk) – Electrical noise coupled from one pair of wires to another within a multi-pair cable.

Part 68 – Requirements specifications established by the FCC as the minimum acceptable protection communications equipment must provide the telephone network.

Patch Cord – A cord made from 4-pair 100-ohm balanced twisted-pair cable. Patch cords may be shielded or unshielded, depending on the type of system being installed. They are typically wired T568 A or B with an 8-position, 8-conductor (8P8C) plug on each end. Work area and TR patch cords are made from stranded cable, which has better flexibility, durability and longer life than solid-conductor cords.

Patching – A means of connecting circuits via cords and connectors that can be easily disconnected and reconnected at another point. Patching may be accomplished by using modular cords connected between jack fields or by patch cord assemblies that plug onto connecting blocks.

Patch Panel – A piece of connecting hardware designed for use in a standard 19" equipment rack or cabinet. Standard patch panels have modular jack appearances on the front and 110-style IDC connections on the rear. Field-configurable patch panels can be loaded with a variety of jacks or other connectors for mixed-media installations, or where the use of various jack colors is desired.

Performance – The totality of a communication transmission's characteristics, including rate of transfer, barriers to peak transfer rate, and comparison to applicable standards. Compare with Compliance. A device can exhibit performance characteristics without being compliant to an industry standard.

Permanent Link – In the horizontal cabling portion of a structured cabling system, the permanent link contains the following: the telecommunications outlet (TO), the cabling between the horizontal cross-connect (HC) and the TO, an optional consolidation point (CP), and the connecting hardware at the HC.

Power Sum – A test method for four-pair cable whereby the mathematical sum of pair-to-pair crosstalk from three pairs to one pair is measured.

Premises – Telephony term for the space occupied by a customer or authorized/joint user in a building(s) on continuous or contiguous property (except railroad rights of way, etc.) not separated by a public road or highway. Frequently used as "premises-based".

Premises Wiring System – The entire wiring system on the user's premises, especially the supporting wiring that connects the communications outlets to the network interface jack.

Punchdown – Refers to the use of an impact tool that enables installers to make efficient IDC style connections.

RCDD® (Registered Communications Distribution Designer) – The RCDD title is a professional credential granted by BICSI. RCDDs have demonstrated a superior level of knowledge of Information Transport Systems (ITS) design and associated disciplines.

Return Loss (RL) – RL is a measure of the similarity of the impedance of a transmission line and the impedance at its terminations. It is a ratio, expressed in decibels, of the power of the outgoing signal to the power of the signal reflected back.

RJ (registered jack) – RJs are telephone and data jacks registered with the FCC. Specific RJs, such as RJ-11 and RJ-45, are widely misused in the telecommunications industry. A much more accurate way to identify a jack is to specify the number of positions (width of opening) and number of conductors. Example: "8-position, 8-conductor (8P8C) jack" or "6-position, 4-conductor (6P4C) jack".

RU (rack unit) – RU is a unit of measure of vertical space in an equipment rack or cabinet. One rack unit is equal to 1.75 in (45 mm).

Standards – Agreed upon principles of performance. Standards are set by committees working under various trade and international organizations.

Structured Cabling System – A structured cabling system (SCS) is defined as the complete collective configuration of cabling and associated hardware that has been installed at a given site to provide a comprehensive telecommunications infrastructure.

TDMM (*Telecommunications Distribution Methods Manual*) – The is a publication from BICSI that is based on internationally accepted industry standards, codes and guidelines. The addresses the newest methodologies and recommends best practices for the design of structured cabling systems.

TE (Telecommunications Enclosure) – Also referred to as a zone enclosure, a TE is a housing for telecommunications equipment, cable terminations, cross-connect cabling, and wireless access points. A TE serves the function of an horizontal cross-connect (HC) for a portion of a building floor and provides access to the building's backbone and pathways. A TE should supplement, not replace, the requirement for a TR on a building floor.

TIA (Telecommunications Industry Association) – The TIA is a trade organization of manufacturers which sets standards for use of its member companies. Formerly fell under the umbrella of EIA. See www.tiaonline.org.

TO (telecommunications outlet) – TO is a connecting device in the work area on which horizontal cable terminates.

TR (telecommunications room) – A TR is an architectural space that provides an environmentally suitable and secure area for housing cables, terminations, cross-connects, hardware and telecommunications equipment.

U/FTP – U/FTP, also classified as STP (shielded twisted pair), is twisted pair cable with individually foil-screened twisted pairs, but no overall shield.

UL (Underwriters Laboratories®) – UL is a privately owned product safety certification organization. UL also certifies category-rated cable performance and quality.

UTP (unshielded twisted pair) – UTP also classified as U/UTP, is overall unshielded twisted pair with unshielded twisted pairs.

Work Area (WA) – WA or workstation is a building space where occupants interact with telecommunications terminal equipment.

WAN (wide area network) – WAN is a computer network that covers a broad geographic area. WANs connect LANs and other networks together. Some are private, but many are built by Internet service providers, who provide connection from organizational LANs to the Internet.

APPENDIX D. REFERENCES

1. ANSI/TIA/EIA-568-B.1 Commercial Building Telecommunications Cabling Standard, Part 1: General Requirements
2. ANSI/TIA/EIA-568-B.2 Commercial Building Telecommunications Cabling Standard, Part 2: Balanced Twisted Pair Cabling Components
3. ANSI/TIA/EIA-568-B.2 –1 Addendum 1 – Transmission Performance Specifications for 4-pair 100-ohm Category 6 Cabling
4. ANSI/TIA/EIA-568-B.2–4 Addendum 4 - Solderless Connection Reliability Requirements for Copper Connecting Hardware
5. ANSI/TIA/EIA-568-B.3 Commercial Building Telecommunications Cabling Standard, Part 3: Optical Fiber Cabling Components
6. ANSI/TIA/EIA-568-B.3-1 Addendum 1 –Additional Transmission Performance Specifications for 50/125 Optical Fiber Cables
7. ANSI/TIA/EIA-569-B Commercial Building Standard for Telecommunications Pathways and Spaces
8. ANSI/TIA/EIA-526-7 Measurement of Optical Power Loss of Installed Single-Mode Fiber Cable Plant
9. ANSI/TIA/EIA-526-14A Measurement of Optical Power Loss of Installed Multimode Fiber Cable Plant
10. ANSI/TIA/EIA-606-A Administrative Standard for the Telecommunications Infrastructure of Commercial Buildings
11. ANSI-J-STD-607-A-2002, Commercial Building Grounding (Earthing) and Bonding Requirements for Telecommunications, Telecommunications Industry Association (TIA), October 2002.
12. EN 50173:1996 Information Technology – Generic Cabling Systems
13. EN 50174-1:2001 Information Technology – Cabling Installation, Part 1: Specification and Quality Assurance
14. EN 50174-2:2001 Information Technology – Cabling Installation, Part 2: Installation Planning and Practices Inside Buildings
15. EN 50174-3:2002 DRAFT Information Technology – Cabling Installation, Part 3: Installation Planning and Practices Outside Buildings
16. ISO/IEC 11801:2002 Information Technology – Generic Cabling for Customer Premises
17. ISO/IEC 14763-1:1999 Information Technology – Implementation and Operation of Customer Premises Cabling, Part 1: Administration
18. ISO/IEC 14763-2:2000 Information Technology – Implementation and Operation of Customer Premises Cabling, Part 2: Planning and Installation
19. ISO/IEC 14763-3:2000 Information Technology – Implementation and Operation of Customer Premises Cabling, Part 3: Testing of Optical Fiber Cabling

APPENDIX D. REFERENCES

20. NFPA 70, National Electrical Code, 2008 Edition, National Fire Protection Association, Inc., August 2001.
21. NFPA 780, Standard for the Installation of Lightning Protection Systems, latest issue
22. C2-2002, National Electrical Safety Code, 2002 Edition, Institute of Electrical and Electronics Engineers, Inc., August 2002.
23. MIL-STD-188-124B, Grounding, Bonding and Shielding for Common Long Haul/Tactical Communication Systems Including Ground Based Communications- Electronics Facilities and Equipments.
24. MIL-HDBK-419A, Grounding, Bonding, and Shielding For Electronic Equipments and Facilities.
25. UFC 1-300-01 Criteria Format Standard
26. UFC 3-580-10 Design: Navy And Marine Corps Intranet (NMCI) Standard Construction Practices Information System (IS)
27. UFGS-16710 09/2004, Structured Telecommunications Cabling and Pathway System.
28. ETL 1110-3-502 - Telephone and Network Distribution System Design and Implementation Guide (Installation Information Infrastructure Architecture (I3A) Design and Implementation Guide).
29. MIL HDBK 1012/3 - Telecommunications Premises Distribution Planning, Design, and Estimating
30. Building Industry Consulting Service International (BICSI) Telecommunications Distribution Methods Manual
31. BBP 03-EC-0-0001: Acquiring Secret Internet Protocol Router Network (SIPRNET) Connectivity: Version 1.0
32. AR 25-2, Information Assurance
33. AR 380-5, Information Security Program
34. AR 380-40, Policy for Safeguarding and Controlling Communications Security – (COMSEC) Material
35. Army Regulation 381-14; Military Intelligence, Technical Counterintelligence, (C)

APPENDIX BB:

General Interior Electrical Requirements

FORT BRAGG, NORTH CAROLINA
GENERAL INTERIOR ELECTRICAL REQUIREMENTS

25 May 2012

A. ELECTRICAL GENERAL REQUIREMENTS

1. All electrical systems shall comply with the Installation Design Guide for a Sustainable Fort Bragg (http://www.bragg.army.mil/dpw/idg/) unless otherwise indicated. Requirements mandated by this RFP or mandated by criteria referenced by this RFP shall supersede the requirements of the Fort Bragg Installation Design Guide. Criteria such as Army Technical Manuals (TMs) referenced by the Fort Bragg Installation Design Guide but not referenced by this RFP shall not be regarded as mandatory.

B. TELECOMMUNICATIONS SYSTEMS

1. The Design-Build Contractor shall design and install the complete building telecommunications cabling systems (BCS) in accordance with the requirements and recommendations of the Technical Guide for Installation Information Infrastructure Architecture (I3A). LAN hubs shall be Government-furnished, Government-installed (GFGI); all other equipment shall be Contractor-furnished, Contractor-installed (CFCI). Connection between the BCS and the outside plant (OSP) shall be the responsibility of the Design-Build Contractor. The Contracting Officer and the DOIM Quality Assurance Officer shall be notified 14 days prior to connection between the BCS and OSP. The connection shall be witnessed by representatives of the Contracting Officer and the DOIM Quality Assurance Officer.

2. Where SIPRnet is required, a separate room dedicated to SIPRnet equipment shall be provided. Encrypted servers shall be GFGI; all other SIPRnet equipment including cabling and the Protective Distribution System (PDS) shall be CFCI.

3. The telecommunications design shall be coordinated with and approved by the Network Enterprise Center (NEC) Quality Assurance Officer prior to construction. The NEC point of contact is Jim Epstein at (910) 908-1206, email address: jim.epstein@us.army.mil.

6. Unless a specific document version of date is indicated, use criteria from the most current references, including any applicable addenda, unless otherwise stated in the contract or task order, as of the date of the Contractor's latest accepted proposal or date of issue of the contract or task order solicitation, whichever is later. In the event of conflict between References and/or Applicable Military Criteria, apply the most stringent requirement, unless otherwise specifically noted in the contract or task order.

7. Ignore the following sentence in Section 01 10 00, Paragraph 5.8.6.2: "In lieu of BICSI certification, supervisors and installers shall have a minimum of 5 years

experience in the installation of the specified copper and fiber optic cable and components. BICSI certification shall be required for supervisors and installers.

C. CABLE TELEVISION (CATV)

1. The Design-Build Contractor shall design and install the complete building cable television (CATV) system in accordance with the Technical Guide for Installation Information Infrastructure Architecture (I3A). The Design-Build Contractor shall coordinate CATV requirements with the local CATV company, Time Warner Cable. Coordination shall include interface requirements between the building CATV system and the site CATV system.

D. SECURITY AND FIRE ALARM SYSTEMS

1. Mass notification systems shall be provided as required by UFC 4-010-01 (DoD Minimum Antiterrorism Standards for Buildings) and Draft UFC 4-021-01(Design And O&M: Mass Notification Systems dated 04 October 2007). The Design-Build Contractor shall make provisions for future connections to a base-wide mass notification system to include telephone and wireless type connections.

2. The building fire alarm system shall be an addressable Class A system fully compatible with the base-wide fire alarm system. The Digital Alarm Communicating Transmitter (DACT) shall be compatible with the Honeywell Enterprise Building Integrator (EBI) System located at the Fort Bragg 911 Center. The DACT shall report all alarms, troubles and supervisory conditions with specific point identification. The DACT module shall be custom programmed for the specific requirements of the 911 Center and the connected fire alarm control panel.

3. Where an Intrusion Detection System (IDS) is required, a The Design-Build Contractor shall provide conduit and wiring for a 20 amp, 120 volt power circuit to a junction box in the room(s) requiring Intrusion Detection System (IDS). The Design-Build Contractor shall also provide communications conduit and cable (with slack) to a junction box in the room(s) requiring Intrusion Detection System (IDS). Locations and connection points shall be coordinated with the Installation Physical Security Officer during design. The point-of-contact for Intrusion Detection System (IDS) is Mr. Thomas Faucette, Physical Security Specialist, at (910) 396-2756/9109, email address: thomas.faucette@us.army.mil.

E. LIGHTNING PROTECTION SYSTEM

1. The lightning risk assessment shall be calculated in accordance with NFPA 780. Calculation variable shall be as follows:

Fort Bragg Lightning Flash Density Index: Ng = 4.
Environmental Coefficient : C1≥1.

Structure Contents Coefficient: C3≥1.
Occupancy Coefficient: C4=1.
Lightning Consequence Coefficient: C5=5.

APPENDIX CC:

Individual Building Mass Notification (IBMNS)/ Personal Alerting System (PAS)

INDIVIDUAL BUILDING MASS NOTIFICATION (IBMNS)/PERSONNEL ALERTING SYSTEMS (PAS) SPECIFICATIONS AND INSTALLATION GUIDELINES

1.0 INTRODUCTION

The Individual Building Mass Notification System (IBMNS) / Personnel Alerting System (PAS) is a mass notification system with public address and visual alert capabilities. The Installation's I2MC/911 Center will have the ability to activate the buildings IBMNS/PAS mass notification system and provide real-time information to all building occupants or personnel in the immediate vicinity of the building during emergency situations. MNS is a construction requirement for all new inhabited buildings as outlined in the UFC 4-021-01, par 1-6.1

1.1 GENERAL REQUIREMENTS (UFC 4-021-01, chap 4)

- UFC COMPLIANCE – IBMNS/PAS must be fully compliant with Unified Facility Criteria UFC 4-021-01. Live voice, pre-recorded messages and visual alerts are required for existing inhabited buildings, primary gathering locations and billeting locations
- IBMNS/PAS must be capable of interfacing to a Telephone Alerting Systems (TASs), as well as existing fire alarm and public address systems where appropriate and required.
- IBMNS/PAS must be part of an integrated indoor/outdoor solution, controlled by the same control point or points
- IBMNS/PAS must be modular in design, allowing system flexibility and scalability.

2.0 EQUIPMENT SPECIFICATIONS (every building's application and installation will be different and must be sized per the intent of the UFC)

2.1 REMOTE TERMINAL UNIT (RTU) (activation point)

2.1.1 FEATURES

2.1.1.1 AMPLIFIERS

Amplifiers must be hot swappable from front panel for ease of maintenance

RTU must be capable of regulating sound output levels individually via remote control point(s), allowing remote optimization of alerts and notifications.

2.1.1.2 COMMUNICATIONS

RTU must be capable of either radio and/or landline control.

Communications format must include 128-bit encryption for security.

2.1.1.3 DIGITAL VOICE STORAGE (UFC 4-021-01, par 2-2.2.1)

RTU must be capable of storing up to 16 digitally stored messages for a total of 8 minutes of pre-recorded messages.

2.1.1.4. SIGNAL ALERTING FORMATS

RTU must be capable of a mixture of voice & tone signaling, with a minimum of 7 preprogrammed warning tones.

2.1.1.5. DYNAMIC OVER-THE-AIR (OR LANDLINE) REPROGRAMMING

At least 25% of the available signal duration capacity must be reprogrammable from the control point(s), with the ability to resend message multiple times and overwrite with new message as necessary.

2.1.1.6 PROGRAMMING SOFTWARE

RTU must be capable of reprogramming with easy-to-use Microsoft Windows-based programming software.

2.1.2 POWER REQUIREMENTS

Input voltage:	120 or 240 VAC +/- 10% 50-60 Hz 1 Phase
Input current:	5A AC, 45A DC Maximum
Battery Input Voltage:	21.5 – 30 VDC (24 VDC Nominal)
Operating Voltage:	24 VDC
Standby Time:	> 3 Days with 5 minute full signal reserve
Continuous Signaling Time:	Minimum of 30 minutes

2.1.3 CONTROLLER REQUIREMENTS

Inputs:	Minimum of 8 remote inputs, 8 sensor inputs and 4 direction sensor inputs
Outputs:	12 Audio outputs per amplifier
Signal Duration:	At least three minutes, with auto reset

Local Microphone Input Impedance:	10 KOhms
Audio Distortion	< 1% Total Harmonic Distortion
Maximum Load Impedance:	600 Ohms
Audio Output Voltage:	.25 to 2.0 Volts P-P @ 600 Ohms
Audio Input Voltage:	.10 to 2.0 Volts P-P @ 600 Ohms
Contact Closure	Minimum of 500 ms. < 1.0 KOhms
Relay Output:	30 VDC, 15 A

2.1.4 TELECOMMUNICATIONS SIGNAL FORMATS

Digital:	Minimal Shift Keying (MSK)
DTMF:	3 – 12 digits
Remote Activation Inputs:	Minimum of 8

2.1.5 AMPLIFIER MODULE

Frequency response:	+/- 3 dB 300 – 3000 Hz (Reference 1 KHz)
Output Voltage to Speaker Drivers:	70 VRms (nominal) 25 VRms (optional)
Input Impedance (per amplifier):	100 KOhms
Power Output (per amplifier)	Minimum of 400 Watts each

2.1.6 GENERAL

Operating Temperature:	-30 to +65 Degrees Celsius
Dimensions (HWD):	32" x 18" x 14" maximum
Enclosure:	NEMA 1 (Lockable)

2.1.7 MONITORING (UFC 4-021-01, par 4-2.1.4)

Two-way diagnostics status monitoring of system, diagnostics must provide Information on. (at a minimum):

- AC Power
- Charger Operation
- Battery Voltage
- Activation Current
- Amplifier voltage and current (per amplifier)
- Quiet Test (Inclusive of Speakers and Amplifiers)
- Local Activation
- Intrusion

- Line Supervision

2.2 PERIPHERALS (speakers, strobe lights, etc)

2.2.1 POWER REQUIREMENTS

Peripherals must be powered by the RTU, not locally at peripheral device. Power distribution must be low voltage, plenum rated class II wiring.

2.3 SPEAKERS (UFC 4-021-01, par 2-3.1.2)

Speaker volume must be locally adjustable with taps or hidden volume controls not readily accessible to building inhabitants (system volume must also be remotely optimizable via software at control point(s). Speaker locations and placement will be in such a manner as to provide intelligible instruction.

Acceptable speakers include:

Federal Signal – AudioMaster

Model	Wattage	Output in dB(C) @ 10'	TYPE
AM-50	2	87	Unamplified, Wall Mounted
AM-300	15	110	Unamplified reentrant trumpet, wall mounted
AM-302	30	114	Unamplified reentrant Trumpet, wall mounted

Federal Signal – Selectone

Model	Wattage	Output in dB(C) @ 10'	Type
50GC	2	88	Amplified w/gain Control, wall mounted
300GC	15	110	Amplified reentrant trumpet w/gain control, wall mounted
302GC	30	114	Amplified reentrant Trumpet w/gain control, Wall mounted

Penton

Model	Wattage	Output in dB(C) @ 10'	Type
RCS6XT72	.25 – 8	94	8" Ceiling mounted, tappable
CELL10T	1.25 – 10	85	Directional Wall Mounted, tappable
CELLBD10T	2.5 – 20	85	Bidirectional wall mounted, tappable
LIS8+XT72	.25 – 8	86	Lay-in Ceiling tile (PP) speaker tappable
PCB6T72	.25 – 5	84	Low profile surface mount, tappable
PH10	10	92	Amplified horn, wall mounted
PH20	20	95	Amplified horn, wall mounted
PH30	30	97	Amplified horn, wall mounted

2.4 STROBE LIGHTS (OPTIONAL) (UFC 4-021-01, par 4-2.1.1)

Strobe lights should meet the intent of the UFC. The domes will be (**AMBER**) in color, mounted to the ceiling on the interior side or the interior wall. The strobe lights are intended to get the building occupants attention to listen to further verbal instructions. IBMNS/PAS strobes are not intended to evacuate the building. Strobe lights need to be distinct and different from Fire Protection Systems strobes when possible.

Acceptable strobes include:

Federal Signal

Model	Peak Candlepower		Type
LP3 (A,G,R,C,B)	175,000	2.2 joules	Drop ceiling, Low-Profile 65-95 FR per min. (PP) ECP@ 51.5
FB24STHI-024C (ADA)	1,000,000		Supervised hearing Impaired strobe

NOTE: The marking (PP) denotes items used in Pilot Program testing.

3.0 INSTALLATION GUIDELINES (every building's application and installation will be different and must be sized per the intent of the UFC)

3.1 RTU LOCATION & POWER REQUIREMENTS

RTU should be centrally located on the ground floor of building.
RTU should be located in a controlled (locked) space inside a NEMA 1 enclosure
RTU must have a dedicated 120 VAC 20A circuit with separate breaker.

Multiple indoor RTUs or outdoor RTUs should be considered for large buildings with audio power requirements exceeding 800 watts

3.2 PERIPHERAL QUANTITIES AND PLACEMENT

Peripheral alerting devices should of sufficient quantities and placement to supply adequate sound (speakers) and visual (strobes) indoor coverage to: Corridors, Hallways, Primary Gathering locations, Conference Rooms, Large Admin Areas, Large Work Areas (Hangers, Warehouses)

3.2.1 INDOOR SOUND COVERAGE (UFC 4-021-01, par 2-3.1.2)

Speakers will provide intelligible (NFPA 72) instruction and measured in accordance with International Electrochemical Commission (IEC 60849)

Consideration for placement and speaker type must be given to:

Building size and usage

Ambient noise levels
Utilize higher output speakers (15, 30, or 100 Watts) to overcome high ambient noise

Building Construction:

Block Walls vs. Drywall Partition
Block walls attenuate sound more than drywall partitions

Slab on Deck vs. Metal/Wood Joist Floors
Floor penetrations are required to distribute speaker and strobe wiring floor-to-floor.

Wood Framed vs. Block & Brick
One exterior wall penetration required for each RTU for coaxial cable to antenna mounted on exterior wall.

Drop Ceiling vs. Sheetrock Ceilings
For "drop" tile ceilings, use "Lay In" Speakers
Drop ceilings allow use of plenum rated class II wiring without conduits

3.2.2 VISUAL COVERAGE (UFC 4-021-01, par 4-2.1.1)

Utilize 1 strobe light approx every 60 feet, and 1 strobe light at each RTU location. The RTU should be start point for strobe placement.
Taking into consideration ADA personnel for location placement, candlepower, joules and ECP.
Placement in Hallways and Corridor coverage should suffice unless large office areas break rooms, and conference rooms exist.

3.3 INTERFACE TO EXISTING SYSTEMS (UFC 4-021-01, par 2-4.1.2)

3.3.1 PUBLIC ADDRESS SYSTEMS (UFC 4-021-01, par 2-4.1.2)

Limit interface to existing systems that have been recently installed as recently as 5 years or less. PA system must meet or exceed required specifications.
Do not interface to existing PA systems that are not always on.
As a general rule, try to avoid interfacing existing PA systems unless absolutely required.

3.3.2 FIRE ALARM PANELS (UFC 4-021-01, par 4-2.1.6)

IBMNS/PAS will interface with existing fire alarm panels; the interface will temporarily deactivate the building fire alarm system's audible notification appliances. The UFC authorizes this deviation from the NFPA 72

Section: Appendix DD

*2 Appendix DD

Borrow Pit Permit

Public Works Business Center

BORROW PIT PERMIT

Project Title/Description: _____

Contract Number: _____

Contractor Point Of Contact: _____

Phone Number: _____

Contracting Agency: _____

Government Inspector Name: _____

Phone Number: _____

Authorization for Use of Fort Bragg Borrow Pits

1. Your organization is authorized to remove up to the amount of material indicated from the Fort Bragg borrow pit listed below in support of the above project:

_____	_____	_____
CUBIC YARDS	START DATE	END DATE

BORROW PIT	LOCATION	TRAINING AREA	GRID COORDINATES
Lamont	**Lamont Road**	**K**	**PJ 755 905**

2. This permit is subject to the following conditions:
   a. Limit borrow operations to the area listed above. Do not expand the boundary of the pit.
   b. Re-grade any areas worked so that water will not stand in the pit.
   c. Do not excavate trenches.
   d. Slopes cut at the edge of the areas worked will not exceed 3:1.
   e. Do not exceed amount of material authorized above. Requestor must apply for an amended permit to increase the amount.
   f. Maintain a copy of this permit at the work site. Be prepared to present it on demand to environmental compliance inspectors, Public Works employees, or law enforcement personnel.
   g. This permit does not guarantee exclusive right to work a specific borrow area within the pit. Coordination and cooperation with other contractors is required while at the borrow pit. It may be necessary to move excavation operations to different areas of the pit to accommodate other users.
   h. Permits are valid only for 60-days from the issue date below.
   i. **Contact the Engineering Equipment Section at 396-7156 prior to starting excavation operations.**

3. Points of contact are Rick Akers at 910-396-7156 (DPW Engineering Equipment Section), or Dan Messier at 910-396-6873 (DPW Landfill and Borrow Pit)

Permit Issued By: _____ Date Issued: _____
Dan Messier, Fort Bragg Borrow Pit Manager

APPENDIX XX

Kitchen Equipment Cut Sheets

ADVANCE TABCO®
SMART FABRICATION™

STAINLESS STEEL

SLIDING DOOR STYLE ENCLOSED BASE WORK TABLES

NSF

Item #: _____ ***Qty #:*** _____
Model #: _____
Project #: _____

Flat Top

1 1/2" Backsplash

5" Backsplash

FEATURES:

FLAT TOP is furnished with a 1 5/8" sanitary rolled rim on the front and 1 5/8" square bend edges on the 2 sides and rear.

1 1/2" SPLASH is furnished with a 1 5/8" sanitary rolled rim on the front side and 1 5/8" square bend edges on the 2 sides and a 1 1/2" splash of single metal thickness on the rear side.

5" SPLASH is furnished with a 1 5/8" sanitary rolled rim on the front side and 1 5/8" square bend edges on the 2 sides and a 5" splash with a 1" return on the rear side.

SLIDING DOORS have recessed handles for ease in opening and closing.

CONSTRUCTION:

All TIG welded. Exposed areas finished to match adjacent surfaces.

Entire Top is mechanically polished to a satin finish and is sound deadened.

Hat section secured to Top reinforces and maintains level working surface.

UNIT-BODY DESIGN sides, back and fixed mid shelf are welded to form a single rigid structure.

Gussets welded to support hat sections.

MATERIAL:

TOP is 14 gauge stainless steel type "304" series with galvanized understructure.

BODY is 18 gauge stainless steel type "430" series.

LEGS are 1 5/8" diameter tubular stainless steel with stainless steel gussets and 1" adjustable stainless steel bullet feet.

24" WIDE

Length	FLAT TOP	1 1/2" SPLASH	5" SPLASH	# of Doors	Wt.
48"	CB-SS-244	CF-SS-244	CK-SS-244	2	185 lbs.
60"	CB-SS-245	CF-SS-245	CK-SS-245	2	230 lbs.
72"	CB-SS-246	CF-SS-246	CK-SS-246	2	280 lbs.
84"	CB-SS-247	CF-SS-247	CK-SS-247	4	325 lbs.
96"	CB-SS-248	CF-SS-248	CK-SS-248	4	370 lbs.
108"	CB-SS-249	CF-SS-249	CK-SS-249	4	425 lbs.
120"	CB-SS-2410	CF-SS-2410	CK-SS-2410	4	460 lbs.
144"	CB-SS-2412	CF-SS-2412	CK-SS-2412	4	490 lbs.

30" WIDE

Length	FLAT TOP	1 1/2" SPLASH	5" SPLASH	# of Doors	Wt.
48"	CB-SS-304	CF-SS-304	CK-SS-304	2	220 lbs.
60"	CB-SS-305	CF-SS-305	CK-SS-305	2	270 lbs.
72"	CB-SS-306	CF-SS-306	CK-SS-306	2	330 lbs.
84"	CB-SS-307	CF-SS-307	CK-SS-307	4	380 lbs.
96"	CB-SS-308	CF-SS-308	CK-SS-308	4	435 lbs.
108"	CB-SS-309	CF-SS-309	CK-SS-309	4	485 lbs.
120"	CB-SS-3010	CF-SS-3010	CK-SS-3010	4	535 lbs.
144"	CB-SS-3012	CF-SS-3012	CK-SS-3012	4	585 lbs.

36" WIDE

Length	FLAT TOP	1 1/2" SPLASH	5" SPLASH	# of Doors	Wt.
48"	CB-SS-364	CF-SS-364	CK-SS-364	2	240 lbs.
60"	CB-SS-365	CF-SS-365	CK-SS-365	2	290 lbs.
72"	CB-SS-366	CF-SS-366	CK-SS-366	2	340 lbs.
84"	CB-SS-367	CF-SS-367	CK-SS-367	4	400 lbs.
96"	CB-SS-368	CF-SS-368	CK-SS-368	4	455 lbs.
108"	CB-SS-369	CF-SS-369	CK-SS-369	4	510 lbs.
120"	CB-SS-3610	CF-SS-3610	CK-SS-3610	4	565 lbs.
144"	CB-SS-3612	CF-SS-3612	CK-SS-3612	4	625 lbs.

Mid Shelves Are Available.
To Add a Fixed Mid Shelf, Add "M" After each Model Number.
Upgrade to Adjustable Mid Shelf. Add TA-116.

ADVANCE TABCO®
SMART FABRICATION™
www.advancetabco.com

Customer Service Available To Assist You 1-800-645-3166 8:30 am - 8:00 pm E.S.T.
Email Orders To: customer@advancetabco.com. For Smart Fabrication™ Quotes, Email To: smartfab@advancetabco.com or Fax To: 631-586-2933

NEW YORK Fax: (631) 242-6900
GEORGIA Fax: (770) 775-5625
TEXAS Fax: (972) 932-4795
NEVADA Fax: (775) 972-1578

DETAILS and SPECIFICATIONS

TOL ± .500”

Units 7’ and larger are furnished with 6 legs.

ALL DIMENSIONS ARE TYPICAL

CB-Series Flat Top

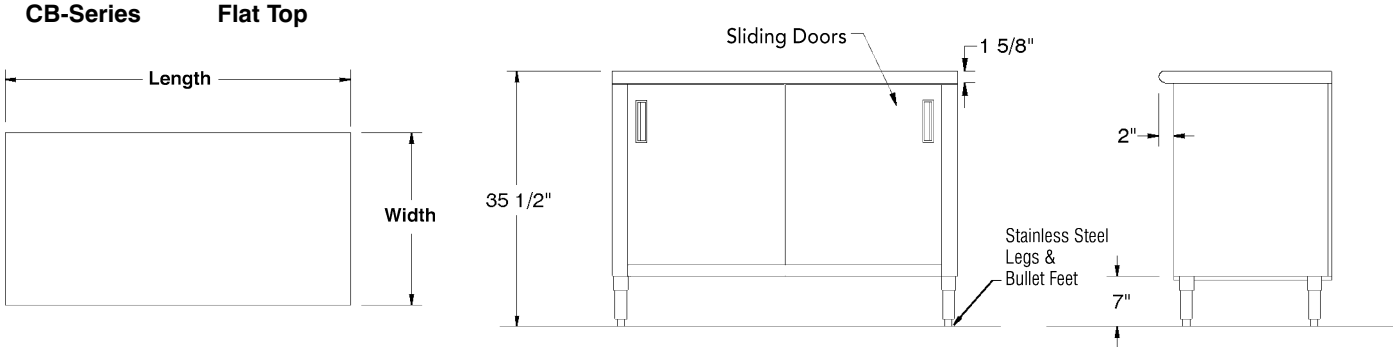

CF- Series 1 1/2” Rear Splash

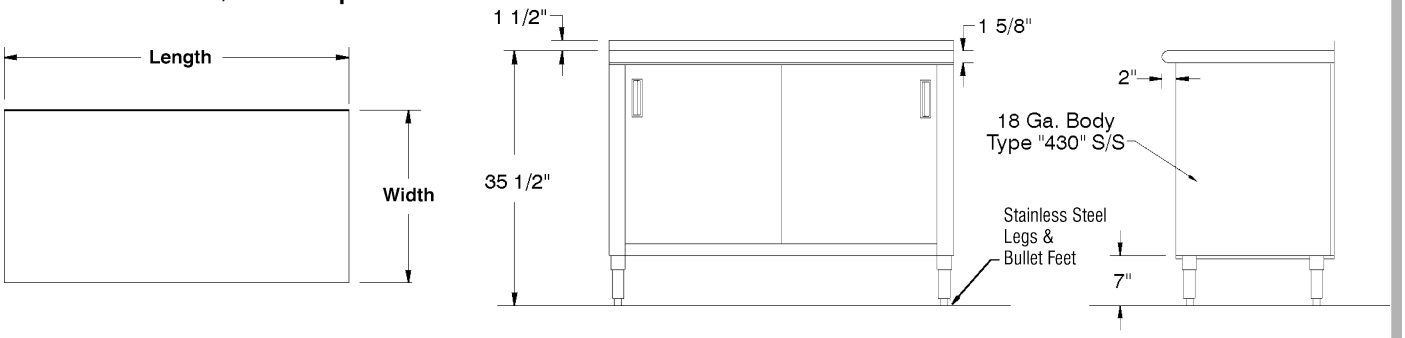

CK-Series 5” Rear Splash

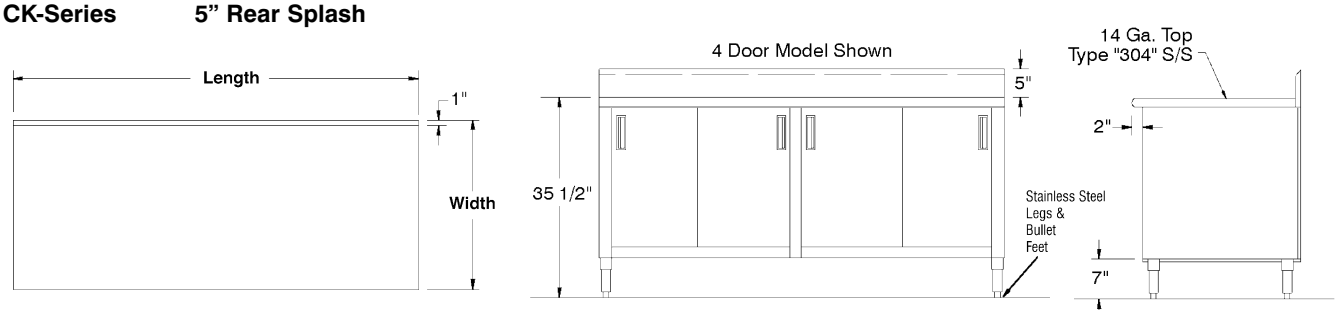

OPTIONAL MID SHELF DETAILS

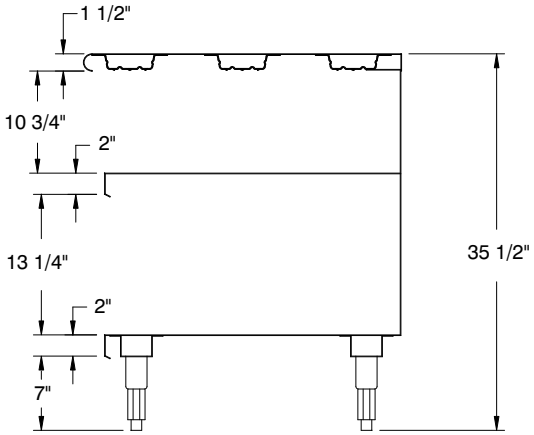

ADVANCE TABCO
SMART FABRICATION
200 Heartland Boulevard, Edgewood, NY 11717-8380

ADVANCE TABCO is constantly engaged in a program of improving our products. Therefore, we reserve the right to change specifications without prior notice.
© ADVANCE TABCO, 2009

Reach-In Top Mount
J Series - Dual Temp

SOLID DUAL TEMPERATURE

35% OF FREEZER & 65% OF REFRIGERATOR (DIVIDED IDEALLY)

NEW

JRF-19

JRF-45

FEATURES & BENEFITS

- **Digital Temperature Control System**
  Provides precise and constant temperature. This level of precision allows food products to remain fresh over an extended period of time.
- **High-Tech Monitor**
  The monitor digitally displays present cabinet temperatures. You can easily change the temperature by adjusting the thermostat.
- **Hot Gas Condensate System**
  Through Turbo Air's creative innovation, the condensate system surfaces have been specially treated to resist corrosion. This not only increases efficiency without the risk of refrigerant leakage from corrosion, but also prevents the overflow of condensate water.
- **Efficient Refrigeration System**
  Turbo Air's solid door reach-in's are designed with oversized and balanced refrigeration systems. CFC Free R-134A utilized for refrigerator and R-404A for freezer. These include efficient evaporators and condensers for faster cooling and greater efficiency.
- **Automatic Evaporator Fan Motor Delays**
  Through stopping the evaporator fan when the refrigerator door opens, the circulation of hot, moist air into the refrigerator is prevented. This increases energy efficiency and lengthens the life of the compressor.
- **Adjustable, Heavy Duty, PE(polyethylene) Coated Wire Shelves**
- **Exterior & Interior of Cabinet Construction**
  Stainless steel exterior (galvanized steel top, bottom and back) and stainless steel interior with AL inside walls and door liners. It guarantees the utmost in cleanliness and long product life. Unlike other companies' products, the sharp corners and edges have been rounded to reduce the risk of injury.
- **High-Density Polyurethane Insulation**
  The entire cabinet structure and solid doors are foamed-in-place using high density, CFC free polyurethane insulation.
- **Ergonomically Designed Doors**
  Customers' fatigue fades away with easy grip handles and doors that open effortlessly. These features along with self-closing doors make this the ultimate choice in customer convenience.
- **Magnetic Door Gaskets**
  Magnetic door gaskets are of one piece construction, removable without tools for ease of cleaning and replacement.
- **Two Separate Refrigeration System**
  J series dual temp model is designed with two separate compressors for refrigerator & freezer. It uses 35% for freezer and 65% for refrigerator from entire cabinet volume creating perfect solution for business with limited space. Single section model is built as freezer on top half and refrigerator on the bottom half. For two section model, freezer is built on the left section.
- **Refrigerator Holds 33°F ~ 38°F, and Freezer Holds -10°F ~ 0°F.**

Model	Swing Door	CU./FT.	#of Shelves	HP	AMPS	Crated Weight (lbs.)	L x D* x H † (inches)
JRF-19	2	9.3(F)/9.3(R)	2	1/3	5	198	25 5/8 x 31 1/2 x 72
JRF-45	2	16.4(F)/22.8(R)	6	1/2(F) 1/3(R)	8.8	364	49 5/8 x 31 1/2 x 72

* Depth does not include 1-3/8" for rear condensate enclosure. † Height does not include 5" for caster height.

JRF MODELS **SPECIFICATIONS**

ELECTRICAL DATA	JRF-19	JRF-45
Voltage	115/60/1	115/60/1
Plug Type	NEMA-5-15P	NEMA-5-15P
Full Load Amperes	5	8.8
Compressor HP	1/3	1/2(F) 1/3(R)
Feed Wires with Ground	3	3
Cord Length ft.	9	9
Refrigerant	R-134A	R-134A / R-404A
DIMENSIONAL DATA		
# of Doors	2	2
Net Capacity cu. ft.	9.3(F)/9.6(R)	16.4(F)/22.8(R)
Ext. Length Overall in.	25 5/8 (650mm)	49 5/8 (1260mm)
Ext. Depth Overall in.*	31 1/2 (800mm)	31 1/2 (800mm)
Ext. Height Overall in.†	72 (1829mm)	72 (1829mm)
Int. Demension (LxDxH) (F)	21 5/8x27 3/8x27 1/8	18 1/8x25 5/8x56
Int. Demension (LxDxH) (R)	21 5/8x27 3/8x27 1/8	25 1/4x25 5/8x56
Gross Weight lbs.	198	364
Net Weight lbs.	181	331
# of Shelves	2	6
Self Size	24 5/8 x 20 1/2	17 x 24 (F) / 24 x 24 (R)

Design and specifications subject to change without notice.
Actual shipping weight may differ due to extra packing materials for product protection.
* Depth does not include 1-3/8" for rear condensate enclosure.
† Height does not include 5" for caster height.

- Incandescent Interior Lighting (JRF-45 only)
- Door Locks
- Self-Contained System
- 4" Swivel Casters
- Solid and Sturdy Grille Design
- Legs Available for All Models (optional)

- **WARRANTY :** 1 Year Parts and Labor Warranty
  Additional 4 Year Warranty on Compressor

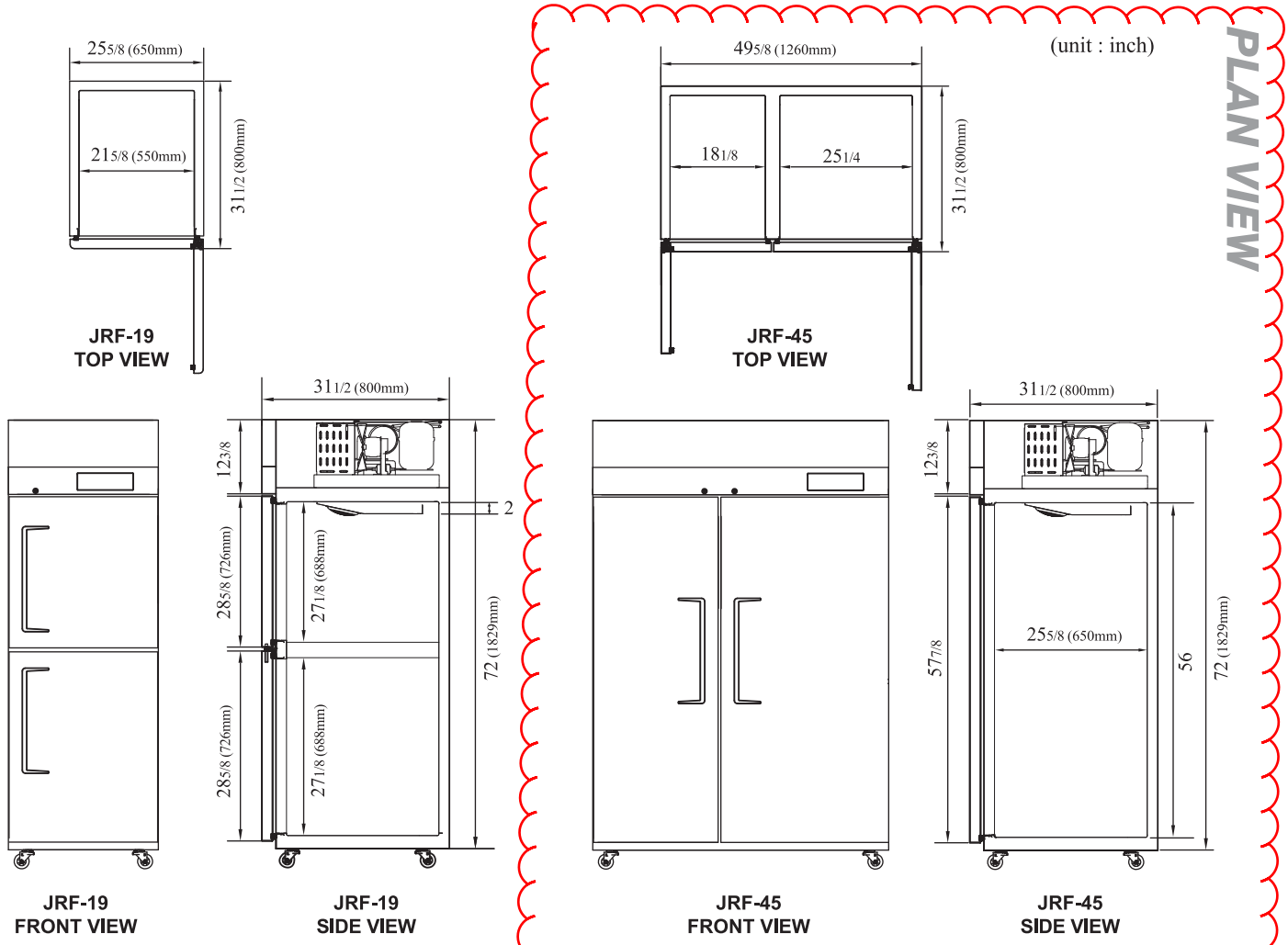

Garland

S686 Sentry Series Electric Restaurant Range

Item: _____

Quantity: _____

Project: _____

Approval: _____

Date: _____

Models:

☐ S686 ☐ SU686 ☑ SS686

Model S686
(shown with optional casters)

NOTE: Ranges supplied with casters must be installed with an approved restraining device.

Standard Features:

- Stainless Steel exterior
- 1 large, full-size oven with complete porcelain interior finish
- Removeable, 4-position, rack guides w/1 oven rack
- Electro-mechanical heavy duty oven thermostat, (150°F/66°C - 550°F/288°C)
- 6 tubular heating elements, infinite switch controlled
- Cool touch oven door handle
- 10" (254mm) high stainless steel backguard with slotted black enameled angled cap
- 6" (152 mm) high stainless steel legs - Adjustable
- 6 sealed, high performance elements with over heat protection and 6-heat switch in lieu of tublar elements, CE approved model SU686, or North American Model SS686
- 1 year limited warranty on parts & labor (USA & Canada only)

Optional Features:

- ☐ Convection oven base (add suffix - RC) with 3-position rack guide assembly and 3 oven racks
- ☐ 5/8" (16mm) thick thermostatically controlled griddle plate available in 12", add suffix 12G, 24" add suffix 24G and 36", add suffix 36G, standard on the right, left optional
- ☐ Solid Steel Hot top 1/2"(13mm) thick utilizing font and rear switch controls, available in 12", add suffix 1, and 24" add suffix 2, standard on the left, right optional
- ☐ Additional Oven Rack
- ☐ Swivel casters with front brakes
- ☐ 17"(432mm) high stainless steel backguard with slotted black enameled angled cap
- ☐ Stainless steel two piece easy to assemble backguard and plate shelf
- ☐ Range mounted salamander broiler (Model SER-686). CE Marked range mounted salamander is SUER-686.
- ☐ Marine equipment - storm rails, oven door latch, drip tray stop and deck fasteners

Specifications:

Electric medium duty range with full size, all porcelain oven interior, contoured front stainless steel plate rail, 36" (914mm) wide, with 6 all purpose tubular heating elements. Stainless steel exterior, with stainless steel 10" (254 mm) high backguard with slotted black enameled angled cap. Available with optional sealed elements with "over heat protection" – reducing power if element is turned on w/o pan for 8 minutes, hot top(s) and griddle. Available with convection oven base.

C US

Note: Only models with prefix "SU" carry the CE Mark

Garland Commercial Industries, LLC
185 East South Street
Freeland, PA 18224
Phone: (570) 636-1000
Fax: (570) 636-3903

Garland Commercial Ranges Ltd
1177 Kamato Road,
Mississauga, Ontario
L4W 1X4 CANADA
Phone: 905-624-0260
Fax: 905-624-5669

Manitowoc

S686 Sentry Series Electric Restaurant Range

Garland

S686 Sentry Series Electric Restaurant Range

Model	Total Kw Load	Nominal Amps					
		208V/1Ph	208V/3 Ph	240V/1Ph	240V/3 Ph	400 V/3N	415V/3N
S686*	15	72	48	62	42	—	—
S686RC	16	75	51	64	44	—	—
SS/SU686**	19	90	59	78	52	40	38
SS/SU686RC	20	93	62	80	54	40	38
Salamander Broiler***	7	34	19	29	16	4	4

*Tubular elements; **Sealed -top elements, Model # SS686 in North America; ***Add when wired to range base (SER/SUER-680)

Exterior Dimensions			Oven Interior Dimensions		
Height	**Width**	**Depth†**	**Height**	**Width**	**Depth**
47" (1194mm)	36" (914mm)	34-1/4" (870mm)	13-1/2" (343mm)	26-1/4" (667mm)	22" (559mm)

† With front rail Note: Shipping Cubic Feet is 58.5

Installation Clearances:	Side	Back
Range w/o Salamander	3" (76mm)	2" (51mm)
Range w/Salamander	7" (178mm)	2" (51mm)
Hot Top	10" (254mm)	—

Entry Clearances		
Crated	**Uncrated**	**Uncrated "RC" Model**
45" (1143mm)	35" (889mm)	40" (1016mm)

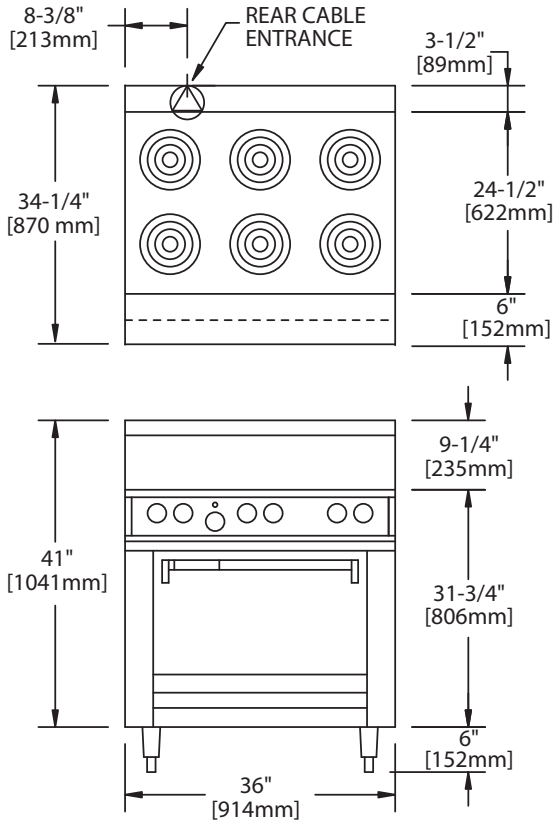

Ratings:

Tubular Elements: 6-1/2" (165mm): 1250 Watts
8-1/2" (216mm): 2100 Watts
Sealed Elements: 7" (180mm): 2000 Watts
8-5/8" (220mm): 2600 Watts
Hot Tops: (per 12"/305mm section):
Front and Rear sections each 1675 Watts, (3350 Watts total)
Griddle (per 12"/305mm section): 3350 Watts
Standard Oven: 4.85 kW
Convection Oven: 5.0 kW (+0.5kW fan motor; for 5.5kW total)

NOTE: For ranges with convection oven, (models with suffix `RC'), air circulation is required for proper operation of fan motors. These models must not be dais mounted or installed without legs.

NOTE: Many local codes exist, and it is the responsibility of the Owner and the Installer to comply with those codes.

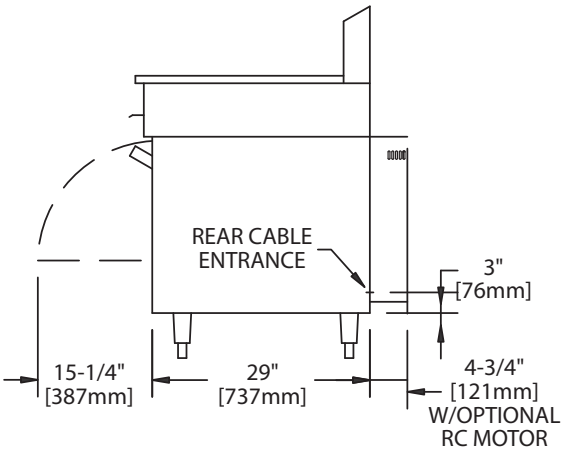

Form# S686 (06/12/09)

Garland Commercial Industries, LLC
185 East South Street
Freeland, PA 18224
Phone: (570) 636-1000
Fax: (570) 636-3903

Garland Commercial Ranges Ltd
1177 Kamato Road,
Mississauga, Ontario
L4W 1X4 CANADA
Phone: 905-624-0260
Fax: 905-624-5669

Manitowoc

Manitowoc

Indigo™ thinking inside the box

Indigo™ Series 1000 Ice Cube Machine

Model: ☐ ID-1002A ☑ IY-1004A ☐ ID-1003W ☐ IY-1005W ☐ ID-1092N ☐ IY-1094N

ENERGY STAR PARTNER

Indigo Series i-1000
Ice Machine on B-570 Bin

Designed for operators who know that ice is critical to their business, the Indigo™ Series ice machine's preventative diagnostics continually monitor itself for reliable ice production. Improvements in cleanability and programmability make your ice machine easy to own and less expensive to operate.

- **Space-Saving Design** – Up to 1,020 lbs. (463 kgs.) daily ice production and only 30" (76.20 cm) wide.
- **Intelligent Diagnostics** – provide 24 hour preventative maintenance and diagnostic feedback for trouble free operation.
- **Acoustical Ice Sensing Probe** – for reliable operation in challenging water conditions.
- **EasyRead Display** – communicates operating status, cleaning reminders, and asset information through a blue illuminated display.
- **Programmable Ice Production** – by On/Off Time, Ice Volume or Bin Level (with accessory bin level control) further improves energy efficiency and savings.
- **Easy to Clean Foodzone** – Hinged front door swings out for easy access. Removable water-trough, distribution tube, curtain, and sensing probes for fast and efficient cleaning. Select components made with AlphaSan® antimicrobial.
- **DuraTech™ Exterior** – provides superior corrosion resistance. Stainless finish with innovative clear-coat resists fingerprints and dirt.
- Available **LuminIce™ Growth Inhibitor** controls the growth of bacteria and yeast within the foodzone.

Ice Machine Electric

208-230/60/1 standard
(208-230/60/3 and 230/50/1 also available.)

Minimum circuit ampacity:

Air-cooled:	13.5 *1ph*	9.5 *3ph*
Water-cooled:	9.7 *1ph*	8.5 *3ph*
Remote:	10.7 *1ph*	9.5 *3ph*

Maximum fuse size:

Air-cooled:	20 *1ph*	15 *3ph*
Water-cooled:	15 *1ph*	15 *3ph*
Remote:	15 *1ph*	15 *3ph*

Specifications

BTU Per Hour:

16,250 (average) 18,600 (peak)

Refrigerant:

R-404A CFC-free

Operating Limits:

- Ambient Temperature Range: 35˚ to 110˚F (1.7˚ to 43.3˚C)
  Water Temperature Range: 35˚ to 90˚F (1.7˚ to 32.2˚C)
- Water Pressure Ice Maker Water In:
  Min. 20 psi (137.9 kPA)
  Max. 80 psi (551.1 kPA)

WARRANTY

ICE MAKER	EVAPORATOR	COMPRESSOR
3 YEAR	5 YEAR	5 YEAR PARTS
PARTS AND LABOR		3 YEAR LABOR

Ice Shape

Half Dice
3/8" x 1 1/8" x 7/8"
(.95 x 2.86 x 2.22 cm)

Dice
7/8" x 7/8" x 7/8"
(2.22 x 2.22 x 2.22 cm)

CALIFORNIA LOW LEAD QUALIFIED Conforms to NSF 61 Annex G · AHRI CERTIFIED · NSF · c UL US LISTED · CE · AutoQuotes · QUALITY MANAGEMENT SYSTEM CERTIFIED BY DNV ISO 9001:2008

2110 South 26th Street
PO Box 1720
Manitowoc, WI 54221-1720 USA

Tel: 1.920.682.0161
Fax: 1.920.683.7589

www.manitowocice.com

Manitowoc

Manitowoc

Indigo™ Series 1000 Ice Cube Machine

i-1000 on B-570 Storage Bin

Ⓐ Electrical Entrance (2) Options
Ⓑ 3/8" (0.95 cm) F.P.T. Water Condenser Inlet (water-cooled units)
Ⓒ 1/2" (1.27 cm) F.P.T. Water Condenser Outlet (water-cooled units)
Ⓓ 1/2" (1.27 cm) Auxillary Base Drain Socket
Ⓔ 3/8" (0.95 cm) F.P.T. Ice Making Water Inlet
Ⓕ 1/2" (1.27 cm) F.P.T. Ice Making Water Drain
Ⓖ 3/4" (1.91 cm) Bin Drain

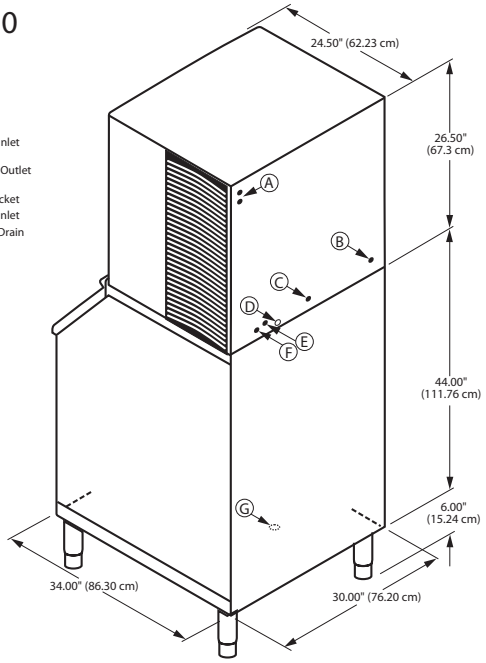

Installation Note
Minimum installation clearance:

Top/sides: 8" (20.32 cm);
Back is 5" (12.7 cm)

Space-Saving Designs

	i-1000 B-570	i-1000 B-970*
Height	76.50" 194.30 cm	76.50" 194.30 cm
Width	30.00" 76.20 cm	48.00" 121.92 cm
Depth	34.00" 86.30 cm	34.00" 86.30 cm
Bin Storage	430 lbs. 195 kgs.	710 lbs. 322.2 kgs.

Height includes adjustable bin legs 6.00" to 8.00", (15.24 to 20.32 cm) set at 6.00" (15.24 cm).

**K-00370 bin adapter required.*

Specifications

	Model	Ice Shape	Ice Production 24 Hours 70°Air/ 50°F Water	Ice Production 24 Hours 90°Air/ 70°F Water	Power Usage kWh/100 lbs. @90°Air/70°F 1 Ph	Power Usage kWh/100 lbs. @90°Air/70°F 3 Ph	Water Usage/ 100 lbs. 45.4 kgs. of Ice Potable Water	ENERGY STAR®
AIR-COOLED	ID-1002A	dice	990 lbs.	735 lbs.	5.41	5.41	19.8 Gal.	★
			449 kgs.	333 kgs.			75.0 L	
	IY-1004A	half-dice	1,010 lbs.	745 lbs.	5.36	5.36	19.8 Gal.	★
			458 kgs.	338 kgs.			75.0 L	
WATER-COOLED	ID-1003W	dice	1,000 lbs.	855 lbs.	4.23	4.23	19.8 Gal.	NA
			454 kgs.	388 kgs.			75.0 L	
	IY-1005W	half-dice	1,010 lbs.	870 lbs.	4.07	4.07	19.8 Gal.	NA
			458 kgs.	395 kgs.			75.0 L	
	* Water-cooled Condenser Water Usage / 100 lbs. /45.4 kgs. Of Ice: 180 gal/681 L. * Water-cooled models are excluded from ENERGY STAR qualification.							
REMOTE-COOLED	ID-1092N	dice	960 lbs.	725 lbs.	5.50	5.50	19.8 Gal.	★
			435 kgs.	329 kgs.			75.0 L	
	IY-1094N	half-dice	1,020 lbs.	775 lbs.	5.28	5.28	19.8 Gal.	★
			463 kgs.	352 kgs.			75.0 L	

Order ice storage bin separately. Ice storage bin and JC-0895 remote condenser must be ordered separately. Consult remote condenser specification sheet for details.
To order 3 phase add "3" suffix to model # (ID-1002A3).

Accessories

LuminIce™ Growth Inhibitor
reduces yeast and bacteria growth for a cleaner ice machine.

Bin Level Control
Allows ice bin level to be automatically set. Built-in LED light illuminates bin.

Arctic Pure® Water Filters
Reduces sediment and chlorine odors for better tasting ice.

AuCS®
schedules and performs routine ice machine cleaning automatically.

4772 (replaces 2707ES-1000) ©2011 Manitowoc 1/11 Continuing product improvement may necessitate change of specifications without notice.

2110 South 26th Street
PO Box 1720
Manitowoc, WI 54221-1720 USA

Tel: 1.920.682.0161
Fax: 1.920.683.7589
www.manitowocice.com

Manitowoc

APPENDIX ZZ

PROJECT SPECIFIC REQUIREMENTS

APPENDIX ZZ

PROJECT SPECIFIC REQUIREMENTS

The following requirements augment Paragraph 6.0 and shall take precedence in the event of conflicts:

1. The Limits of Construction are shown on the drawings. All construction, including utility tie-ins, shall be confined within the Limits of Construction. The Contractor's staging area shall be within the Limits of Construction. The Contractor shall be responsible for temporary utilities and maintaining the work site. The Contractor shall not adjust the Limits of Construction without prior approval by the Contracting Officer and the Ft. Bragg DPW.

2. Calculate Pre-development discharge rate and quantity of discharge as if the two buildings destroyed by the tornado were existing on the site. Erosion control documents should reflect the same conditions.

3. Provide two (2) dumpster capacity pad with screening.

4. Provide one Type - B sign as depicted in Appendix H.

5. Provide 73 POV parking spaces, which includes spaces for HOV and LE/FE vehicles. Use wheel stops to delineate ATFP standoff distances from the warehouse.

7. Provide an area for vehicle maneuvering between the loading bay doors and the chain link fence. The maneuver area shall have a minimum clear distance of 145’ deep in order to accommodate up to WB-50 vehicles along the entire length of the warehouse. Maneuver area pavement shall be concrete.

8. Provide a 20 ft. concrete vehicle circulation lane along both sides and both ends of the warehouse building. The 20 ft. is included within the 145 ft. vehicle maneuver area.

9. Repair the existing security fence where necessary to prevent unauthorized access to the site during non-duty hours. The new sections of fence shall be type FE-6, 72" fabric height, with bottom rail.

10. Provide an electrically operated slide gate at each vehicle access drive.

11. Provide 8" diameter bollards around the warehouse where necessary to prevent vehicular damage to the warehouse. Provide 8" diameter bollards where necessary to protect all site features exposed to vehicular traffic, to include but not limited to fences, PIVs, electrical equipment, dumpsters, mechanical equipment, communication equipment, etc.

12. Woody vines and tree limbs overhanging the security fence and warehouse hardstand shall be pruned to the fence line. Tree pruning shall be in accordance with TCIA A300, Standard for Tree Care Operations - Tree, Shrub and Other Woody Plant - Standard Practices. Tree removal is not allowed.

13. Provide "SMOKING AREA" signs outside breakroom entrance.

14. Utility work (tie-in and route) shall be included in the Erosion and Sediment Control Permit and the Storm Water Permit.

15. Maximum bollard diameter shall be 8 inches.

16. Existing hardstand to remain shall be maintained and protected during construction. Hardstand damaged due to Contractor's negligence shall be repaired by the Contractor at no cost to Government.

*2
17. Provide a ~~designated area near the warehouse~~ paved 8-foot by 10-foot area near the dumpster pad for empty pallet storage.

18. Provide a designated area near the electrical room for a future backup generator.

19. UFC 4-010-01, dated 9 February 2012 has been approved for public release. The offerors and the DB Contractor are responsible for applying revised ATFP standoff distances.

20. Maximize use of existing hardstand.

21. The main entrance to the warehouse shall be at grade. Ramp access or stair access will not be allowed.

22. Exterior access to the mechanical and electrical rooms shall be at grade. Ramp access or stair access will not be allowed.
*1
23. ~~Remove Building N-5231, above and below ground, complete. Backfill and compact depressions caused by building demolition.~~Deleted

24. A valid NCDENR sediment and erosion control permit is required prior to removal of stumps from the project site. Cut all merchantable timber prior to pushing the stump, leaving a stump less than 12 inches. Trim trees of limbs, and cut the top off where the diameter of the tree is less than 4 inches. Haul trees, tree length, to a designated location and stack in an orderly manner. Haul and stack trees in a manner that prevents the trees from being buried or pushed into the ground. Stockpile merchantable timber pine and hardwood trees separately.

25. If a temporary irrigation system is used, its use shall be limited to a period of one year to support turf establishment or until the turf is established. It shall be above ground metered and equipped with a pressure backflow prevention device.
*1
26. The Contractor should anticipate encountering debris, utility lines, and remnants of building foundations within the building site.

27. Railroad tracks within the final project fence line shall be removed. Backfill, compact, and pave depressions resulting from the railroad track demolition.
*2
28. The requirement in Paragraph 6.8.1, Section 01 10 00, to reduce potable water use for building sewage conveyance by 50 percent shall be deleted.

29. The non-water using urinal information in Paragraph 6.8.2, Section 01 10 00, shall be deleted because of the Base's prohibition on the use of waterless urinals.

APPENDIX ZZ

PROJECT SPECIFIC REQUIREMENTS

The following requirements augment Paragraph 6.0 and shall take precedence in the event of conflicts:

1. The Limits of Construction are shown on the drawings. All construction, including utility tie-ins, shall be confined within the Limits of Construction. The Contractor's staging area shall be within the Limits of Construction. The Contractor shall be responsible for temporary utilities and maintaining the work site. The Contractor shall not adjust the Limits of Construction without prior approval by the Contracting Officer and the Ft. Bragg DPW.

2. Calculate Pre-development discharge rate and quantity of discharge as if the two buildings destroyed by the tornado were existing on the site. Erosion control documents should reflect the same conditions.

3. Provide two (2) dumpster capacity pad with screening.

4. Provide one Type - B sign as depicted in Appendix H.

5. Provide 73 POV parking spaces, which includes spaces for HOV and LE/FE vehicles. Use wheel stops to delineate ATFP standoff distances from the warehouse.

7. Provide an area for vehicle maneuvering between the loading bay doors and the chain link fence. The maneuver area shall have a minimum clear distance of 145’ deep in order to accommodate up to WB-50 vehicles along the entire length of the warehouse. Maneuver area pavement shall be concrete.

8. Provide a 20 ft. concrete vehicle circulation lane along both sides and both ends of the warehouse building. The 20 ft. is included within the 145 ft. vehicle maneuver area.

9. Repair the existing security fence where necessary to prevent unauthorized access to the site during non-duty hours. The new sections of fence shall be type FE-6, 72" fabric height, with bottom rail.

10. Provide an electrically operated slide gate at each vehicle access drive.

11. Provide 8" diameter bollards around the warehouse where necessary to prevent vehicular damage to the warehouse. Provide 8" diameter bollards where necessary to protect all site features exposed to vehicular traffic, to include but not limited to fences, PIVs, electrical equipment, dumpsters, mechanical equipment, communication equipment, etc.

12. Woody vines and tree limbs overhanging the security fence and warehouse hardstand shall be pruned to the fence line. Tree pruning shall be in accordance with TCIA A300, Standard for Tree Care Operations - Tree, Shrub and Other Woody Plant - Standard Practices. Tree removal is not allowed.

13. Provide "SMOKING AREA" signs outside breakroom entrance.

14. Utility work (tie-in and route) shall be included in the Erosion and Sediment Control Permit and the Storm Water Permit.

15. Maximum bollard diameter shall be 8 inches.

16. Existing hardstand to remain shall be maintained and protected during construction. Hardstand damaged due to Contractor's negligence shall be repaired by the Contractor at no cost to Government.

17. Provide a designated area near the warehouse for empty pallet storage.

18. Provide a designated area near the electrical room for a future backup generator.

19. UFC 4-010-01, dated 9 February 2012 has been approved for public release. The offerors and the DB Contractor are responsible for applying revised ATFP standoff distances.

20. Maximize use of existing hardstand.

21. The main entrance to the warehouse shall be at grade. Ramp access or stair access will not be allowed.

22. Exterior access to the mechanical and electrical rooms shall be at grade. Ramp access or stair access will not be allowed.

23. Remove Building N-5231, above and below ground, complete. Backfill and compact depressions caused by building demolition.

24. A valid NCDENR sediment and erosion control permit is required prior to removal of stumps from the project site. Cut all merchantable timber prior to pushing the stump, leaving a stump less than 12 inches. Trim trees of limbs, and cut the top off where the diameter of the tree is less than 4 inches. Haul trees, tree length, to a designated location and stack in an orderly manner. Haul and stack trees in a manner that prevents the trees from being buried or pushed into the ground. Stockpile merchantable timber pine and hardwood trees separately.

25. If a temporary irrigation system is used, its use shall be limited to a period of one year to support turf establishment or until the turf is established. It shall be above ground metered and equipped with a pressure backflow prevention device.