SECTION 01 10 00.W912HN-07-X-0710
TASK ORDER STATEMENT OF WORK

1.0 PROJECT OBJECTIVES

1.1. SECTION ORGANIZATION

2.0 SCOPE

2.1. Advanced Individual Training (AIT) Barracks

2.2. SITE

2.3. GOVERNMENT-FURNISHED GOVERNMENT INSTALL EQUIPMENT (GFGI)

2.4. FURNITURE REQUIREMENTS

3.0 Advanced Individual Training (AIT) Barracks

3.1. GENERAL REQUIREMENTS

3.2. FUNCTIONAL AND AREA REQUIREMENTS

4.0 APPLICABLE CRITERIA

4.1. INDUSTRY CRITERIA

4.2. MILITARY CRITERIA

5.0 GENERAL TECHNICAL REQUIREMENTS

5.1. SITE PLANNING AND DESIGN

5.2. SITE ENGINEERING

5.3. ARCHITECTURE AND INTERIOR DESIGN

5.4. STRUCTURAL DESIGN

5.5. THERMAL PERFORMANCE

5.6. PLUMBING

5.7. ELECTRICAL AND TELECOMMUNICATIONS SYSTEMS

5.8. HEATING, VENTILATING AND AIR CONDITIONING

5.9. ENERGY CONSERVATION

5.10. FIRE PROTECTION

5.11. SUSTAINABLE DESIGN

5.12. CONSTRUCTION AND DEMOLITION (C&D) WASTE MANAGEMENT

5.13. SECURITY (ANTI-TERRORISM STANDARDS)

6.0 PROJECT SPECIFIC REQUIREMENTS

6.1. GENERAL

6.2. APPROVED DEVIATIONS

6.3. SITE PLANNING AND DESIGN

6.4. SITE ENGINEERING

6.5. ARCHITECTURE

6.6. STRUCTURAL DESIGN

6.7. THERMAL PERFORMANCE

6.8. PLUMBING

6.9. SITE ELECTRICAL AND TELECOMMUNICATIONS SYSTEMS

6.10. FACILITY ELECTRICAL AND TELECOMMUNICATIONS SYSTEMS

6.11. HEATING, VENTILATING AND AIR CONDITIONING

6.12. ENERGY CONSERVATION

6.13. FIRE PROTECTION

6.14. SUSTAINABLE DESIGN

6.15. ENVIRONMENTAL

6.16. PERMITS

6.17. DEMOLITION

6.18. ADDITIONAL FACILITIES

1.0 PROJECT OBJECTIVES

The project objective is to design and construct facilities for the military that are consistent with the design and construction practices used for civilian sector projects that perform similar functions to the military projects. For example, a Company Operations Facility has the similar function as an office/warehouse in the civilian sector; therefore the design and construction practices for a company operations facility should be consistent with the design and construction of an office/warehouse building.

Comparison of Military Facilities to Civilian Facilities

Military Facility	Civilian Facility
Advanced Individual Training (AIT) Barracks	Dormitory

It is the Army's objective that these buildings will have a 25-year useful design life before a possible re-use/re-purpose or renovation requirement, to include normal sustainment, restoration, modernization activities and a 50-year building replacement life. Therefore, the design and construction should provide an appropriate level of quality to ensure the continued use of the facility over that time period with the application of reasonable preventive maintenance and repairs that would be industry-acceptable to a major civilian sector project OWNER. The site infrastructure will have at least a 50-year life expectancy with industry-accepted maintenance and repair cycles.

The project site should be developed for efficiency and to convey a sense of unity or connectivity with the adjacent buildings and with the Installation as a whole.

Requirements stated in this contract are minimums. Innovative, creative, and life cycle cost effective solutions, which meet or exceed these requirements are encouraged. Further, the OFFEROR is encouraged to seek solutions that will expedite construction (panelization, pre-engineered, etc.) and shorten the schedule. **The intent of the Government is to emphasize the placement of funds into functional/operational requirements. Materials and methods should reflect this by choosing the lowest Type of Construction allowed by code for this occupancy/project allowing the funding to be reflected in the quality of interior/exterior finishes and systems selected.**

1.1. SECTION ORGANIZATION

This Section is organized under 6 major “paragraphs”.

(1) Paragraph 1 is intended to define the project objectives and to provide a comparison between the military facility(ies) and comparable “civilian” type buildings.

(2) Paragraph 2 describes the scope of the project.

(3) Paragraph 3 provides the functional, operational and facility specific design criteria for the specific facility type(s) included in this contract or task order.

(4) Paragraph 4 lists applicable industry and government design criteria, generally applicable to all facility types, unless otherwise indicated in the Section. It is not intended to be all-inclusive. Other industry and government standards may also be used, where necessary to produce professional designs, unless they conflict with those listed.

(5) Paragraph 5 contains Army Standard Design Criteria, generally applicable to all facility types, unless otherwise indicated in the Section.

(6) Paragraph 6 contains installation and project specific criteria supplementing the other 5 paragraphs.

2.0 SCOPE

2.1 ADVANCED INDIVIDUAL TRAINING (AIT) BARRACKS

2.1.1 Barracks

The purpose of this project is to completely repair, renovate, and modify late 1960's era barracks building 29703. The total number of single enlisted personnel to be housed is 190 (156 men, 34 women).
*2
2.1.2 ~~Lawn Maintenance/Storage Building~~Deleted

~~Provide one lawn maintenance/storage building. This project type is to provide facilities for the purpose of storing outdoor maintenance equipment and supplies. The maximum gross area for the Lawn maintenance storage building is 1,430 gross square feet.~~

2.1.3 Phasing

The Contractor shall have 360 days after NTP to accomplish the design, abatement, demolition and construction. The design period may begin immediately after NTP. Abatement, demolition, and construction shall not start until 150 days after NTP, unless earlier release is given by Fort Gordon and the Contracting Officer.

2.2. SITE:

Provide all site improvements necessary to support the new building facilities. Refer to Paragraph 6.

Approximate area available 3.51 acres

2.3. GOVERNMENT-FURNISHED GOVERNMENT-INSTALLED EQUIPMENT (GFGI)

Coordinate with Government on GFGI item requirements and provide suitable structural support, brackets for projectors/VCRs/TVs, all utility connections and space with required clearances for all GFGI items. Fire extinguishers are GF/GI personal property, while fire extinguisher brackets and cabinets are Contractor furnished and installed CF/CI. All Computers and related hardware, copiers, faxes, printers, video projectors, VCRs and TVs are GFGI.

The following are also GFGI items: None

2.4. FURNITURE REQUIREMENTS

Provide furniture design for all spaces listed in Chapter 3 and including any existing furniture and equipment to be re-used. Coordinate with the user to define requirements for furniture systems, movable furniture, storage systems, equipment, any existing items to be reused, etc. Early coordination of furniture design is required for a complete and usable facility.

The procurement and installation of furniture is NOT included in this contract. Furniture will be provided and installed under a separate furniture vendor/installer contract. The general contractor shall accommodate that effort with allowance for entry of the furniture vendor/installer onto this project site at the appropriate time to permit completion of the furniture installation for a complete and usable facility to coincide with the Beneficial Occupancy Date (BOD) of this project. The furniture vendor/installer contract will include all electrical pre-wiring and the whips for final connection to the building electrical systems however; the general contractor shall make the final connections to the building electrical systems under this contract. Furthermore, the general contractor shall provide all Information/Technology (IT) wiring (i.e. LAN, phone, etc.) up to and including the face plate of all freestanding and/or systems furniture desk tops as applicable, the services to install the cable and face plates in the furniture, the coordination with the furniture vendor/installer to accomplish the installation at the appropriate time, and all the final IT connections to the building systems under this contract.

The Government reserves the right to change the method for procurement of and installation of furniture to Contractor Furnished/Contractor Installed (CF/CI). CF/CI furniture will require competitive open market procurement by the Contractor using the Furniture, Fixtures and Equipment (FF&E) package.

2.5. NOT USED

3.0 ADVANCED INDIVIDUAL TRAINING (AIT) BARRACKS

3.1 GENERAL

Repair, renovate, and modify existing barracks building to provide new barracks housing for a total of 190 soldiers. Renovated Barracks shall provide housing for 34-females, 156-males. Room breakdown by number of occupants: (24) 3-person rooms, (59) 2-person rooms. Room breakdown by gender: female barracks rooms (4) three person and (11) two person) and male barracks rooms; (20) three person and (48) two person). The four bedroom modules at each end of the facility on each floor will house three soldiers per room. One bed in each of those rooms will be a bunk bed.

3.1.1 Gross Building Area

The existing barracks buildings are three stories and contain approximately 40,640 square feet. Gross areas of facilities shall be computed as:

a. Enclosed Spaces. The gross area includes the total area of all floors, including basements, mezzanines, penthouses, usable attic or sloping spaces used to accommodate mechanical equipment or for storage with an average height of 6’-11” measured from the underside of the structural system and with the perimeter walls measuring a minimum of 4’-11” in height, and other enclosed spaces as determined by the effective outside dimensions of the building.

b. One-Half Spaces. One half of the area will be included in the gross area for balconies and porches; exterior covered loading platforms or facilities, either depressed, ground level, or raised; covered but not enclosed passageways or walks; covered and uncovered but open stairs; and covered ramps.

c. Excluded Spaces. Crawl spaces; exterior uncovered loading platforms or facilities, either depressed, ground level, or raised; exterior insulation applied to existing buildings; open courtyards; open paved terraces; roof overhangs and soffits for weather protection; uncovered ramps; uncovered stoops; and utility tunnels and raceways will be excluded from the gross area.

3.1.2 Functional Areas

Net area requirements for functional spaces are included in the drawings. If net area requirements are not indicated, the space shall be sized to accommodate the required function, comply with code requirements, comply with overall gross area limitations and other requirements of the RFP (for example, area requirements for corridors, stairs, and mechanical rooms will typically be left to the discretion of the Offeror).

3.1.3 Accessibility Requirements

Able-bodied soldiers occupy and manage the barracks facility. The Americans with Disabilities Act (ADA) and Architectural Barriers Act (ABA) requirements do not apply to this facility, except as follows:

3.1.3.1 Site Plan Design and Construction

a. Provide ADA/ABA compliant access from the parking lot to the building.

b. Provide two (2) ADA/ABA compliant vehicle parking stalls for each barracks building for visitor parking.

c. Provide handicapped vehicle parking signage and pavement markings.

3.1.3.2 Facility Design and Construction:

Dayrooms and computer learning centers on the first floor shall be accessible.

3.1.4 Antiterrorism/Force Protection

The existing barracks building and new building balcony and stairwell additions shall comply with the requirements of UFC 4-010-01, DOD Minimum Antiterrorism Standards for Buildings. Roads and parking areas are to remain unless otherwise identified on the Drawings. Setback and building hardening requirements are not applicable for this contract.

3.1.5 Energy Policy Act 2005 (EPACT 05)

The existing barracks building and new additions shall be designed and constructed to comply with the statutory requirements for federal facilities in accordance with EPACT 2005. These facilities shall operate at an energy utilization rate that is 30 % less than the base rate as indicated in ASHRAE Standard 90.1.

3.1.6 Acoustical requirements

Exterior walls and roof/floor/ceiling assemblies, doors, windows, and interior partitions shall be designed to provide for attenuation of external noise sources such as airfields in accordance with applicable criteria, but no less than the following:

a. Interior partitions- STC 49

b. Exterior walls- STC 49

c. Floors separating sleeping spaces- STC50/IIC 55

d. Module entry, bedroom and bathroom doors-STC 25

Sound conditions (and levels) for interior spaces, due to the operation of mechanical and electrical systems and devices, shall not exceed levels as recommended by ASHRAE handbook criteria. Provide acoustical treatment for drain lines and other utilities to prevent noise transmission into interior of bedrooms. All acoustically rated partitions shall extend to the underside of the roof deck or floor slab above/below and shall be sealed. All penetrations in acoustically rated partitions shall be sealed.

3.1.7 Separate and Secure environment

The separate and secure requirement for this facility is to ensure that all soldiers are afforded the opportunity to undergo training in a gender safe environment. The following requirements for this facility are extracted from TRADOC Regulation 350-6. Additional requirements are included in the functional and area requirements.

a. Physically separate requirements:
   (1) Each gender has an independent sleeping area.
   (2) Each gender has a separate latrine.
   (3) Each gender has a separate entrance to the living area.
   (4) Access control guards of the same gender monitor entrances to sleeping areas during sleeping hours. The function of the access control guard is to ensure only authorized personnel enter the sleeping area during periods of lights out. Access control guards are assigned and execute their duties as same gender buddy (two -person) teams.
   (5) Door alarms installed and doors locked. All doors to sleeping areas are equipped with an audible alarm that sounds and is heard at the charge of quarters (CQ) location and panic

door locks. Alarms are activated any time Soldiers are sleeping in the bays, this includes anytime a Soldier is sleeping while on quarters.

(6) Fire safe barrier wall placed between genders (same floor). If the barrier has a door, the door will be locked and alarmed, during lights out. When the alarm sounds it must be able to be heard at the CQ location. If conditions for fire barriers are not met, separate genders by floor, wing, or building are required.

(7) Digital video monitoring systems provide additional degree of security, and do not replace the requirement for door and barrier alarms, access control guards, and supervisory personnel. Only place cameras in public access areas, such as entryways, stairwells, etc. Cameras will not monitor living or latrine areas. Battalion Commanders determine length of time digital recordings are maintained. Security tapes, keys, and monitoring devices will be controlled by the commander or first sergeant.

3.2 FUNCTIONAL AND AREA REQUIREMENTS

a. See appendices for existing plans etc. for typical barracks buildings. Building 29715 will be the first of the newly renovated TBUP Barracks to come on line to the post and therefore is the model for future TBUP Barracks on the Fort Gordon AIT Campus. The goal of the Fort Gordon DPW Master Planning Branch is to have Building 29715's massing, exterior finishes, and exterior color palette reproduced on future TBUP barracks. Exposed structural elements are not an acceptable design solution (i.e. deck edges, steel columns, progressive collapse elements, underside of roofing/flooring structural systems, etc.). Galvanized steel is not an acceptable exposed solution.

b. Perform an as-built survey of the existing facility to establish actual existing conditions and features and prepare plans and elevations that capture all of the existing conditions and features.

c. Provide facility upgrades as required to meet codes and criteria for new construction. The entire facility existing plus new stairwell/balcony additions and other additions shall meet codes/criteria for new construction.

d. Demolition, relocation and replacement of existing mechanical, plumbing and electrical equipment/service shall be accomplished as necessary. All equipment not utilized shall be demolished.

3.2.1 Building Repair/Renovate/Modify

a. Renovate/modernize existing barracks building to provide new barracks housing for a total of 190 soldiers, 34 females and 156 males. Twenty 3-person and forty-eight 2-person barracks bedrooms shall be for male soldiers and four 3-person and eleven 2-person barracks bedrooms shall be for female soldiers.

b. Provide separate and secure division between male and female soldiers (See paragraph 3.1.7). Ground level decorative security grilles matching the design of those in Appendix GG shall be installed around the entire perimeter at the first floor. The security barriers shall be installed to separate genders. All points of egress on the first floor shall be equipped with alarmed gates or doors so that they will only be used in emergencies, or will otherwise alert officers of unauthorized egress or access. Alarmed gates or doors within the decorative security grille barrier shall not allow access to locking mechanism, panic device etc. from the exterior side of the opening. Interior doors from the lobby to the female living areas, male living areas, stairwell and main entrance doors shall be equipped with alarms that can be activated and deactivated independent of activation/deactivation of all other alarms. All alarms will be activated/ deactivated at the CQ station. Exterior stairs shall be located to allow each gender to safely egress without Intermingling, provide circulation from floor to floor for male soldiers without intermingling with female soldiers. Operationally all Soldiers shall enter and exit the facility through the controlled access entrance vestibule/lobby. The only exception to the controlled access will be in the case of emergencies or fire drills where all egress points will be utilized.

c. See Appendix J-2 for floor plan layouts for each floor. Functional layout and adjacency requirements are indicated in the Barracks Building 29716 floor plans provided in Appendix J-2. These functional layouts and adjacencies are mandatory with the following exceptions:

1) Stair locations, size, configuration and construction shall be modified to meet the separate and secure division requirements, requirements of all applicable criteria and all other requirements included in the RFP.

2) Appendix J-2, First floor plan currently provides a stair adjacent to the CQ office. This stair needs to be relocated to be directly adjacent to the male living area on the first floor with direct access to the lobby. Direct access to the lobby does not preclude the addition of direct alarmed egress to the exterior to meet applicable criteria requirements.

2) Access control entry vestibule/lobby shall be included. Currently these functional spaces are not shown in the appendix J-2 layout.

3) Appendix J-2, First floor plan currently provides a separate CQ office, CQ bath room and a storage room adjacent to the Laundry. CQ office shall be deleted. A Charge of Quarters (CQ) station shall be provided centrally located in the lobby. See lobby functional requirements paragraph for CQ station requirements.

(4) Appendix J-2, First floor plan currently provides a CQ bath room which shall be relocated to the existing exterior wall in place of the CQ office and shall be renamed Unisex latrine.

(5) Appendix J-2, First floor plan currently provides a storage room adjacent to the CQ bath room. The storage room shall shift to abut the rear wall of the unisex latrine. Entrance door to the storage room shall be relocated to accommodate new entrance to laundry room.

4) Close off new access to the laundry room adjacent to the CQ office entrance currently shown in plan. Provide new access door from the adjacent corridor/breezeway.

Each functional space size/net areas are minimum requirements. The Design /Build (D/B) Contractor is required to adhere to these mandatory designs as indicated above. The desired appearance of the facility is similar to the elevations indicated in the Barracks Building 29716 design drawings provided in Appendix J-2. The remainder of the design drawings for Barracks Building 29716 provided in appendix J-2 is for information only. The Barracks Building 29716 design drawings may or may not reflect the actual existing conditions for Barracks building 29703.

3.2.2 Existing Building Exterior

New exterior design, and finishes and elements shall comply with the Fort Gordon Installation Design Guide.

a. Repair:

(1) All existing materials, elements, equipment or fixtures that will remain as determined by the Designer of Record’s (DOR's) design shall be repaired and restored for the purpose of being maintained in good or sound condition. If it is determined by the DOR that these items cannot be repaired or restored these items shall be replaced with new to match existing. This determination shall be made prior to the bid.

(2) Clean all existing brick and tuck point all mortar joints.

b. Renovate/Modify:

(1) Remove all existing exterior doors and windows.

(2) Provide new exterior windows and doors for all openings as required by the new building design.

(3) Remove and replace existing exterior wall as required by the new building design. The new building design shall minimize the extent of existing exterior wall removal.

(4) Provide new covered balconies and stairwells.

(5) Provide new brick façade as required to meet the new Design.

(6) Provide roof/wall insulation as required to meet the thermal performance requirements to ensure compliance with the Energy Policy Act of 2005 (EPACT 2005).

(7) Provide facility upgrades as required to meet the requirements of UFC 4-010-01, DOD minimum Antiterrorism Standards for buildings.

(8) Remove all existing roof system components.

(9) Provide new Structural Standing Seam Roofing System (SSMR) to include new gutters and leaders.

(10) Provide soffits/ceilings for all balconies, covered walkways and roof overhangs.

(11) All new columns and beams for balconies should be finished with EIFS/Split-faced CMU.

(12) Stairwell enclosures shall be spilt-faced block.

(13) Provide decorative EIFS finish at door/window and other locations to match that on building 29715 (see example in Appendix II).

3.2.3 Existing Building Interior

New interior design- renovate/modify existing building layout as required to reconfigure functional spaces to meet the new functional space requirements defined within the RFP.

a. Repair: All existing materials, elements, equipment or fixtures that will remain as determined by the Designer of Record’s (DOR's) design shall be repaired and restored for the purpose of being maintained in good or sound condition. If it is determined by the DOR that these items cannot be repaired or restored, replace them with new to match existing. This determination shall be made prior to the bid.

b. Renovate/Modify:

(1) Remove all existing interior doors and windows.

(2) Provide new interior windows and doors for all openings as required by the new building design.

(3) Remove all existing interior stairs.

(4) Remove and replace existing interior walls as required by the new building design.

(5) Remove all existing plumbing fixtures.

(6) Provide new plumbing fixtures as required by the design.

(7) Remove all existing toilet accessories.

(8) Provide new toilet accessories as required by the new design.

(9) Remove all interior floor, wall and ceiling finishes.

(10) Provide new floor, wall, and ceiling finishes in accordance with the finish schedule in Paragraph "Finish Schedule", below.

(11) Provide facility upgrades as required to meet the requirements of UFC 4-010-01 DOD Minimum Antiterrorism Standards for Buildings.

3.2.4 Functional and Operational Requirements

Floor plans and elevation drawings are provided in Appendix J. These drawings are provided to convey the end users desire for specific functional relationships and exterior appearance. The Contractor shall provide a code/criteria compliant design solution that meets the requirements of the RFP.

a. Intermediate Bedrooms: Each bedroom shall provide a minimum of 90 square feet per soldier with no more than 2 soldiers per room. Fifty nine (48 male, 11 female) intermediate bedrooms are required.
(1) Function: Provide soldier sleeping accommodations.
(2) Occupancy: Two soldiers.
(3) Adjacency requirements: See floor plans included in appendices. Female rooms are to be located on the first floor.
(4) Provide exterior access to each bedroom with one 3-foot wide by 7-foot high exterior door. Provide alarms as required by paragraph 3.1.7.

(5) See Paragraph "Finish Schedule", below, for required finishes.
(6) Furnishings/Fixtures: Government furnished and Government installed furniture includes two beds, two wardrobe lockers, one desk, and one chair for each bedroom (118 beds, 118 wardrobe lockers, 59 desks and 59 chairs total).

b. Quad (end) Bedrooms: 24 (20 male, 4 female) Quad (end) Bedrooms are required.
(1) Function: Provide soldier sleeping accommodations.
(2) Occupancy: Three soldiers.
(3) Adjacency requirements: See floor plans included in appendices. Female rooms are to be located on the first floor.
(4) Provide exterior access to each bedroom with one 3-foot wide by 7-foot high exterior door. Provide alarms as required by paragraph 3.1.7.
(5) See Paragraph "Finish Schedule", below, for required finishes.
(6) Furnishings/Fixtures: Government furnished and Government installed furniture includes two beds (one a bunk bed), three wardrobe lockers, two desks, and two chairs for each Quad (end) Bedrooms,(24 beds, 24 bunk beds, 72 wardrobe lockers, 48 desks and 48 chairs total).

c. Bathrooms: Each bedroom shall have one full bath.
(1) Function: Provide bathroom facilities for room occupants.
(2) Adjacency requirements: See floor plans included in appendices.
(3) Provide an elongated floor mounted flush tank type vitreous china water closet, monolithic shower pans a minimum of 60 inches long by 36 inches in depth, one toilet paper dispenser, vanity with storage cabinets below, one recessed mirrored medicine cabinet 16-inches wide by 24 inches high with adjustable shelves, mounted on the back wall above the vanity. Medicine cabinet construction shall be heavy gauge steel all welded, with powder-coated finish. Mirror shall be 1/4-

inch thick select float glass in a one piece 1/2-inch by 1/2-inch by 1/2-inch type 304 satin finished, stainless steel frame with mitered corners.
(4) Provide 2 towel bars.
(5) Shower surrounds shall be Fiberglass or acrylic.
(6) Bathroom vanity shall be separated from the tub/shower-water closet enclosure.
(7) See Paragraph "Finish Schedule", below, for required finishes.

d. Laundry Rooms: Provide 2 laundry rooms per floor.
(1) Function: Provide self serve laundry facilities for building occupants.
(2) Adjacency requirements: See floor plans included in appendices. Female laundry room is to be located on the first floor.
(3) Provide exterior access to each laundry room with one 3’-8” wide by 7’-0” high exterior door.
(4) See Paragraph "Finish Schedule", below, for required finishes.
(5) Furnishings/Fixtures: Government furnished and Government installed furniture and equipment includes four commercial washers and seven commercial dryers in each laundry room and one clothes folding/hanging table 2 feet deep by 5 feet long.

e. Dayroom: Provide 1 dayroom per floor.
(1) Function: Provide for casual and recreational use.
(2) Adjacency requirements: See floor plans included in appendices. Female Day room is to be located on the first floor.
(3) Provide exterior access to each Dayroom room with one 3’-8” wide by 7’-0” high exterior door.
(4) Provide separate restroom with 1 floor-mounted water closet and lavatory per dayroom. See suggested floor plan included in appendices for location. Provide the following toilet accessories: one 24 inch wide by 36 inch long mirror above and centered on lavatory, 1 paper towel dispenser/waste receptacle; 1 soap dispenser and 1 toilet paper dispenser.
(5) See Paragraph "Finish Schedule", below, for required finishes.
(6) Furnishings/Fixtures: Government furnished and Government installed furniture includes two 4-person tables with chairs, four end tables, and eight lounge chairs in each dayroom.

f. Computer Learning Center: Provide one computer learning center per floor.
(1) Function: Provide for computer based learning.
(2) Adjacency requirements: See floor plans included in appendices. Female computer learning center is to be located on the first floor.
(3) Provide exterior access to each laundry room with one 3’-8” wide by 7’-0” high exterior door.
(4) See Paragraph "Finish Schedule", below, for required finishes.
(5) Furnishings/Fixtures: Government furnished and Government installed furniture includes five 24- inch deep by 48-inch wide computer desks with modesty panels and articulating keyboards, ten 30-inch deep by 36-inch wide computer work stations with divider panels, and fifteen task chairs.

g. Profile Recovery Room: Provide one profile recovery room on the first floor.
(1) Function: Provide space for injured trainees to maintain their aerobic conditioning and improve their recovery from minor physical injuries.
(2) Adjacency requirements: See floor plans included in appendices. Access to the Profile Recovery room shall be from the lobby and be controlled by the CQ.
(3) See Paragraph "Finish Schedule", below, for required finishes.
(4) Furnishings/Fixtures: Government furnished Government installed fitness equipment includes treadmills, stationary bicycles and other fitness equipment.

h. Storage Room: Provide two storage rooms per floor.
(1) Function: Provide secure storage space.
(2) Adjacency requirements: See floor plans included in appendices.
(3) See Paragraph "Finish Schedule", below, for required finishes.
(4) Furnishings/Fixtures: None.

i. Unisex Latrine: Provide one unisex latrine on the first floor.

(1) Function: Provide restroom facilities for CQ and visitors.
(2) Adjacency requirements: See floor plan included in appendices and requirements of paragraph 3.2.1 c (3).
(3) Furnishings/Fixtures: Provide one floor mounted water closet and lavatory. Provide the following toilet accessories: one 24 inch wide by 36 inch long mirror above and centered on lavatory, one paper towel dispenser/waste receptacle; one soap dispenser and one toilet paper dispenser.
(4) See finish schedule paragraph 3.2.6 for required finishes.

j. Janitor closet: Provide two per floor. Minimum net area shall be 65 net square feet. Room shall be accessed from balcony/corridor.
(1) Function: Provide space for service sink and storage of cleaning supplies, soap and paper products, buckets and a vacuum.
(2) Adjacency requirements: Locate directly adjacent to exterior stairwells adjacent to laundry rooms.
(3) Furnishings/Fixtures: Provide one floor mounted mop sink and mop rack for three mops. GFGI equipment includes one 20-inch deep 5 shelf steel shelving unit.

k. Entrance Vestibules: A vestibule or air lock shall be provided at the main entrance to the facility.

(1) Function: Provides intermediate space between exterior doors and corridors/lobby to reduce drafts and improve energy efficiency.
(2) Adjacency Requirements: Directly adjacent to lobby.
(3) Total net area as required by design. The net area is part of the overall building gross area.
(4) Other Requirements: Provide walk-off mat.

l. Lobby. Provide as required for circulation and access control.

(1) Function: Space serves as primary entrance/exit for trainees, instructors and visitors entering the facility.

(2) Adjacency requirements: Directly adjacent to main entrance vestibule, male and female living areas, unisex latrine and profile recovery room.

(3) Total net area as required by design. The net area is part of the overall building gross area.

(4) Provide a Charge of Quarters (CQ) station/ built in reception station located in the central portion of the lobby with a minimum area of 80 net square feet. Built in station shall provide modesty screening for occupant. Station provides visual control of building circulation, alarm activation/ deactivation and video monitoring of all cameras. The reception station shall have a minimum of six lockable file drawers. Securable compartments for the computer monitor, keyboard, and CPU shall be built in to the reception station.

(5) Provide cameras as required by paragraph 3.1.7.

3.2.5 Non-Assignable Spaces

The functional areas below account for additional net area within the facility that is not specifically listed in the functional areas identified above.

a. Mechanical Room. Provide dedicated interior spaces and exterior areas for plumbing, fire protection, and HVAC equipment. Ensure design of openings and equipment placement provides adequate clearances for maintenance and replacement of equipment without requiring demolition. Provide floor openings and vertical shaft spaces as necessary. Provide a minimum of 2 mechanical rooms on each floor.
(1) Function. Mechanical support spaces for the facility.
(2) Adjacency requirements: Locate mechanical room with door openings as shown in the appendix J-2 floor plan. Mechanical support spaces shall not be used for storage or other purposes; access to mechanical spaces shall be limited to authorized personnel.
(3) See Paragraph "Finish Schedule", below, for required finishes.

(4) Total net area as required by design. The net area is part of the overall building gross area.

b. Electrical Room. Provide dedicated interior spaces and exterior areas for electrical equipment. Ensure design of openings and equipment placement provides adequate clearances for maintenance and replacement of equipment without requiring demolition. Provide a minimum of one electrical room per floor.

(1) Function. Electrical support spaces for the facility.
(2) Adjacency requirements: See floor plan included in appendices. Electrical support spaces shall not be used for storage or other purposes; access to electrical spaces shall be limited to authorized personnel.
(3) See Paragraph "Finish Schedule", below, for required finishes.
(4) Total net area as required by design. The net area is part of the overall building gross area.

c. Communications Room. A communications room is required to manage building connection to telephone, fiber, optic, cable television, and other infrastructure. Communication rooms will not be used for storage or other purposes. Provide a minimum of two communication rooms per floor.

(1) Function: Communications service to the facility.
(2) Adjacency Requirements: Locate for economical cable distribution. See floor plan included in appendices.
(3) See Paragraph "Finish Schedule", below, for required finishes.
(4) Total net area as required by design. Minimum net areas of the rooms shall meet the I3A Technical Criteria. The net area is part of the overall building gross area.

d. Balconies (Corridors) and Breezeways. Provide as required for circulation; minimum width shall be as required by applicable codes.

(1) Function. Provides circulation and egress; movement of equipment for building occupants.
(2) Adjacency requirements: Adjacent to exterior entrances, and interior spaces. See floor plan included in appendices. Balconies/corridors shall be continuous as shown in floor plan included in the appendix J-2 floor plans.
(3) Doors to first floor mechanical corridor shall be alarmed to alert officers of unauthorized egress or access.
(4) See Paragraph "Finish Schedule", below, for required finishes.
(5) Total net area as required by design.
(6) Provide cameras as required by paragraph 3.1.7.

e. Stairwells, Provide as required for vertical circulation.

(1) Function. Provides circulation and egress; movement of equipment for building occupants.
(2) Adjacency requirements: Adjacent to exterior entrances, and interior spaces. See floor plan included in appendices and paragraph 3.1.7.
(3) See Paragraph "Finish Schedule", below, for required finishes.
(4) Total net area as required by design.
(5) For compliance with NFPA 101 paragraphs 3.3.72 and 7.7, exit access on the first floor within the perimeter of the exterior footprint of the facility and decorative security barrier shall be considered inside the facility.
(6) Width of stair treads shall be a minimum of 60 inches. Tread width is required to facilitate movement of supplies and equipment.
(7) Provide cameras as required by paragraph 3.1.7.

3.2.6 Finish Schedule

Legend

a. VCT - Vinyl Composition Tile
b. GB-P - Gypsum Board - Painted
c. CM-P - Concrete Masonry - Painted
d. SGB-P - Suspended Gypsum Board – Painted
e. ACT- Suspended Acoustical Ceiling tile

f. WM- Walk off mat

RENOVATED,RESTORED AND MODERNIZED BARRACKS BUILDINGS FINISH SCHEDULE				
ROOM NAME	FLOOR FINISH	BASE MATERIAL	WALL FINISH	CEILING MATERIAL
BEDROOMS	VCT	RUBBER	GB-P/CM-P	SGB-P
BATHROOMS, UNISEX LATRINE, JANITORS CLOSETS	CERAMIC TILE	CERAMIC TILE	CERAMIC TILE WAINSCOT /GB-P	SGB-P
LAUNDRY ROOMS	VCT	RUBBER	CM-P	SGB-P
DAYROOM	VCT	RUBBER	GB-P/CM-P	SGB-P
COMPUTER LEARNING CENTER	VCT	RUBBER	GB-P/CM-P	SGB-P
LOBBY	VCT	RUBBER	GB-P/CM-P	ACT
MAIN ENTRANCE VESTIBULE	WM	RUBBER	GB-P/CM-P	ACT
PROFILE RECOVERY ROOM	VCT	RUBBER	CM-P	SGB-P
COMMUNICATIONS	CONCRETE	NONE	CM-P	CONC. DECK - PAINTED
STORAGE ROOMS	VCT	RUBBER	CM-P	SGB-P
ELECTRICAL ROOMS	NONE	NONE	CM-P	NONE
STAIRS	CONCRETE	NONE	CM-P	CONC. DECK - PAINTED
BREEZEWAY,BALCONIES/ CORRIDORS	CONCRETE	NONE	CM-P	PRE-FINISHED METAL
MECHANICAL ROOMS AND MECHANICAL CORRIDORS	CONCRETE	NONE	CONC. MAS.	CONC. DECK

*2
3.2.7 ~~LAWN MAINTENANCE STORAGE BUILDING~~DELETED

3.2.7.1 ~~General~~Deleted
~~Provide one stand alone, single story lawn maintenance storage building. This project type is to provide facilities for the purpose of storing outdoor maintenance equipment and supplies. A maximum of 1,430 gross square feet is required. Building is a low occupancy facility and is not routinely occupied. See appendix J-3 for floor plan layout. The functional layout and adjacencies are mandatory. No petroleum, oils or lubricants (POL) will be stored in this facility.~~

~~3.2.7.1.1(A) Supply Storage rooms 1 and 2: Room length must be a minimum of 16 feet. Room width must be a minimum of 12 feet. A minimum net area of 192 square feet for each room is required.~~
~~(1) Provide a physical separation with drywall partitions constructed to the underside of the roof deck above between supply storage room 1 and lawn equipment area 1 and between supply storage room 2 and lawn equipment area 5.~~
~~(2) Supplies to be stored will be combustible and stored no higher than eight feet above the finished floor.~~

~~(3) Provide a pair of 4 foot by 7 foot high hollow metal doors with mortise locksets. Hollow metal doors shall be provided with ventilation louvers in the lower half of each door leaf.~~
~~(4) Furnishing/fixtures: Government will furnish and install three -four foot wide by 20 inch deep six shelf heavy duty shelving units in each room.~~

~~3.2.7.1.2(B) Lawn Equipment rooms 1,2,3,4 and 5: Room length must be a minimum of 12 feet. Room width must be a minimum of 10 feet. A minimum net area of 120 square feet for each room is required.~~
~~(1) Provide a physical separation with chain link partitions constructed to the underside of the roof deck above between each lawn equipment area.~~
~~(2) Provide a pair of 4 foot by 7 foot high hollow metal doors with mortise locksets. Hollow metal doors shall be provided with ventilation louvers in the lower half of each door leaf.~~
~~(3) Furnishing/fixtures: Government will furnish and install two -four foot wide by 20 inch deep six shelf heavy duty shelving units in each room.~~
~~(4) Provide a poured concrete apron at each lawn equipment area as shown in the appendix J floor plan. Concrete apron to abut adjacent poured concrete sidewalk.~~

3.3 TECHNICAL REQUIREMENTS

3.3.1 MECHANICAL REQUIREMENTS

3.3.1.1 Water Heating

Domestic water heating system shall be sized based on 23.75 gallons of 110 deg. F hot water consumption per occupant during morning peak period. Peak period duration shall be 29 minutes (9.5 minute duration for shower and lavatory use per occupant per dwelling unit plus a 10 minute transition period). Hot water storage capacity shall be based on 75% usable storage and a storage temperature of 140 deg F. For domestic hot water pipe sizing, peak hot water flow rate shall be based on all showers flowing simultaneously at a rate of 2.0 gpm per shower. Waste stacks, building waste drains, and lift stations (if required) shall be sized with consideration of increased flow rates as well. Shower heads and lavatory faucets shall be water conservation type with maximum flow rate not to exceed 2.0 gpm.

Maximum plumbing fixture flow rates shall be as follows:

Water closets: 1.28 gallons per flush
Showers: 2.0 gpm
Bathroom sinks: 1.0 gpm
Kitchen sinks: 1.5 gpm
Janitor sinks: 2.0 gpm

3.3.1.2 Laundry: Centralized (If Centralized)

Laundry facilities shall be considered commercial laundries with respect to the IPC and shall be provided with solids interceptor in accordance with the IPC. If dryer vents are manifolded to a common exhaust, provide an easily accessible means of cleanout. Dryer exhaust vent exterior terminations shall be located no closer than 15 feet from dwelling unit bedroom windows.

3.3.1.3 Heating, Ventilating and Air-Conditioning

a. If the Life Cycle Cost Analysis determines that a Multiple Zone Air Handler with VAV terminal boxes is a viable alternative and this system type will meet the energy conservation requirements of the RFP as well as having a construction cost within the government contract cost limitation(as determined by the Designer of Record), refer to paragraph 6.11.2. User Preferred System as a reference.

b. Room/dwelling unit: HVAC units shall be located in the corridor; however, if space is not available in corridor for installation of HVAC units then the units may be installed above the ceiling inside the room/dwelling unit. Ceiling HVAC access panels shall be sized for ease of service and maintenance of HVAC units.

c. Each dwelling unit shall be positively ventilated using dedicated outdoor air units. Dedicated outdoor air units shall continuously supply dehumidified, tempered air to each bedroom. Supply air conditions shall be between 70 and 75 degree F dry bulb and no greater than 48 degree F dew point. Supply quantity shall be 30 cfm per person per dwelling unit. Dwelling unit exhaust shall be 45 cfm continuous through a bathroom exhaust. Note: This exceeds ASHRAE 62.1 but provides compliance with IMC chapter 4 and maintains slight building positive pressurization with respect to dwelling unit exhaust rate of 45 cfm; dedicated outdoor air unit cooling/dehumidification shall be available 24/7/365. Refer to chapter 6 for site specific constraints. Exhaust and DOAU systems shall be provided with variable frequency drives (VFDs) and shall be provided with a control logic that provides reduced ventilation rates during periods of low interior humidity and still meet minimum ASHRAE 62.1 requirements.

d. Corridors shall be ventilated per ASHRAE 62.1 by supply from the dedicated outdoor air unit.

e. Dwelling unit room temperature control shall be through the direct digital control (DDC) system. Each dwelling unit shall have a heating/cooling unit with thermostat/temperature control sensor located in common area. Occupant control will include fan selection (on/off) and an occupant temperature setpoint adjustment mechanism that allows +/- 2 deg F of adjustment from the DDC programmed set points (70 deg F heating, 75 deg F cooling). Additionally, the DDC controls shall monitor each dwelling unit for sub-cooling. The DDC system shall record an alarm event if the space temperature drops below 71 degree F (adjustable) when the outside air is greater than 85 degree F (adjustable). Occupant control shall also include ability to select heating or cooling mode. HVAC system shall be able to provide for year round heating or cooling in individual dwelling units as selected by the occupants.

f. The new HVAC systems for building 29703 shall tie into the existing High Temperature Hot Water system and Chilled Water system distribution lines connected to the Central Energy Plant. A stand alone boiler shall be installed for heating requirements needed during the summer months, and shall use the heating hot water from the Central Energy Plant during the winter months. Refer to paragraph 6.5.2 for Central Energy Plant operational data.

3.3.2 ELECTRICAL REQUIREMENTS

The Contractor is responsible for all site electrical and communication work required to serve the renovated building, including relocation and replacement of the utility transformer serving buildings 29702 and 29703. The new transformer shall be located east of building 29703 in the vicinity of the dumpster, shall be no closer than 25 feet to any buildings, and shall comply with UFC 3-600-01 and utility requirements. Transformer location shall be coordinated with and approved by the Fort Gordon Directorate of Public Works (DPW) through the Contracting Officer. New service conductors and conduit shall be provided between buildings 29702 and 29703 and the new transformer. Temporary service shall be provided to building 29702; no outages shall be allowed to building 29702. The Contractor is also responsible for the relocation and/or replacement of all existing electrical lines that interfere with the renovation. The Contractor shall procure the services of Georgia Power Company to design, furnish and install all site power systems and to replace and/or relocate site power and lighting lines as necessary. No work shall be done by Georgia Power Company outside this contract.

The complete existing electrical system including power, lighting, communication and signal systems shall be demolished and replaced with new systems. Service entrance equipment, ducts and conductors shall be included in the electrical replacement. Site lighting and other site power loads beyond the building 5-foot line shall be excluded from the electrical replacement, except site circuits originating in the building shall be reconnected to new panelboards.

Electrical systems, including but not limited to interior power, interior lighting, interior and exterior communication systems, cable television (CATV) systems, fire alarm and detection system, mass notification system, lightning protection system, grounding system and cathodic protection system shall be complete and fully operational and shall be designed to comply with the documents listed in applicable criteria. Select electrical characteristics of the power system to provide a safe, efficient, and economical distribution of power based upon the size and types of loads to be served. Use distribution and utilization voltages of the highest level that are practical for the load to be served. The effect of nonlinear loads such as computers, other electronic equipment and electronic ballasts shall be considered and accommodated as necessary. Circuits serving such devices shall be equipped with a separate neutral conductor not shared with other circuits. Panelboards and dry-type transformers shall be rated accordingly. Voltage drop shall not exceed the maximum allowed per ASHRAE 90.1.

3.3.3 SEWER, WATER AND GAS UTILITIES

The Contractor is responsible for all site sewer, water and gas work required to serve the renovated building, including removal of existing utilities to the building. The Contractor is also responsible for the relocation and/or replacement of all existing sanitary sewer, domestic water, chilled water, hot water, and gas piping that interferes with the renovation. Refer to the paragraph 6.4 for privatized utility information and points of contact.

4.0 APPLICABLE CRITERIA

Unless a specific document version or date is indicated, use criteria from the most current references as of the date of issue of the contract or task order, including any applicable addenda, unless otherwise stated in the task order. In the event of conflict between References and/or Applicable Military Criteria, apply the most stringent requirement, unless otherwise specifically noted in the contract or task order.

4.1. INDUSTRY CRITERIA

Applicable design and construction criteria references are listed in Table 1 below. This list is not intended to include all criteria that may apply or to restrict design and construction to only those references listed. See also Paragraph 3 for additional facility-specific applicable criteria.

Table 1: Industry Criteria

Air Conditioning and Refrigeration Institute (ARI)	
ARI 310/380	Packaged Terminal Air-Conditioners and Heat Pumps
ARI 440	Room Fan-Coil and Unit Ventilator
ANSI/ARI 430-99	Central Station Air Handling Units
ARI 445	Room Air-Induction Units
ARI 880	Air Terminals
Air Movement and Control Association (AMCA)	
AMCA 210	Laboratory Methods of Testing Fans for Rating
American Architectural Manufacturers Association (AAMA)	
AAMA 605	Voluntary Specification Performance Requirements and Test Procedures for High Performance Organic Coatings on Aluminum Extrusions and Panels
AAMA 607.1	Voluntary Guide Specifications and Inspection Methods for Clear Anodic Finishes for Architectural Aluminum
AAMA 1503	Voluntary Test Method for Thermal Transmittance and Condensation Resistance of Windows, Doors, and Glazed Wall Sections
American Association of State Highway and Transportation Officials (AASHTO)	
	Roadside Design Guide [guardrails, roadside safety devices]
	Standard Specifications for Transportation Materials and Methods of Sampling and Testing [Road Construction Materials]

	Standard Specifications for Structural Supports for Highway Signs, Luminaires and Traffic Signals
	Guide for Design of Pavement Structures, Volumes 1 and 2 [pavement design guide]
	A Policy of Geometric Design of Highways and Streets
American Bearing Manufacturers Association (AFBMA)	
AFBMA Std. 9	Load Ratings and Fatigue Life for Ball Bearings
AFBMA Std. 11	Load Ratings and Fatigue Life for Roller Bearings
American Boiler Manufacturers Association (ABMA)	
ABMA ISEI	Industry Standards and Engineering Information
American Concrete Institute	
ACI 302.2R	Guide for Concrete Slabs that Receive Moisture-Sensitive Flooring Materials
ACI 318	Building Code Requirements for Structural Concrete
ACI SP-66	ACI Detailing Manual
ACI 530	Building Code Requirements for Masonry Structures
ADA Standards for Accessible Design	
See US Access Board	ADA and ABA Accessibility Guidelines for Buildings and Facilities, Chapters 3-10.
American Institute of Steel Construction (AISC)	
	Manual of Steel Construction – 13th Edition (or latest version)
American Iron and Steel Institute	
AISI S100	North American Specification for the Design of Cold-Formed Steel Structural Members
American National Standards Institute 11 (ANSI)	

ANSI Z21.10.1	Gas Water Heaters Vol. 1, Storage water Heaters with Input Ratings of 75,000 Btu per Hour or less
ANSI Z124.3	American National Standard for Plastic Lavatories
ANSI Z124.6	Plastic Sinks
ANSI Z21.45	Flexible Connectors of Other Than All-Metal Construction for Gas Appliances
ANSI/IEEE C2-2007	National Electrical Safety Code
ANSI/AF&PA NDS-2001	National Design Specification for Wood Construction
American Society of Civil Engineers (ASCE)	
ASCE 7	Minimum Design Loads for Buildings and Other Structures
ASCE 37	Design and Construction of Sanitary and Storm Sewers, Manuals and Reports on Engineering Practice [sanitary sewer and storm drain design criteria]
ASCE/SEI 31-03	Seismic Evaluation of Existing Buildings [Existing Building Alteration/Renovation]
ASCE/SEI 41-06	Seismic Rehabilitation of Existing Buildings [Existing Building Alteration/Renovation]
American Society of Heating, Refrigerating and Air Conditioning Engineers (ASHRAE)	
ASHRAE 90.1	ANSI/ASHRAE/IESNA 90.1, Energy Standard for Buildings Except Low-Rise Residential Buildings
ASHRAE Guideline 0	The Commissioning Process
ASHRAE Guideline 1.1	The HVAC Commissioning Process
ASHRAE Handbooks	Fundamentals, HVAC Applications, Systems and Equipment, Refrigeration (Applicable, except as otherwise specified)
ASHRAE Standard 15	Safety Standard for Refrigeration Systems
ASHRAE Standard 62.1	Ventilation for Acceptable Indoor Air Quality
ASHRAE Standard 55	Thermal Environmental Conditions for Human Occupancy (Design portion is applicable)

American Society of Mechanical Engineers International (ASME)	
ASME BPVC SEC VII	Boiler and Pressure Vessel Code: Section VII Recommended Guidelines for the Care of Power Boilers
ASME A17.1	Safety Code for Elevators and Escalators
ASME B 31 (Series)	Piping Codes
American Water Works Association (AWWA)	
	Standards [standards for water line materials and construction]
American Welding Society	
	Welding Handbook
	Welding Codes and Specifications (as applicable to application, see International Building Code for example)
Architectural Woodwork Institute (AWI)	
Version 1.2	AWI Quality Standards 7th Edition
Associated Air Balance Council (AABC)	
AABC MN-1	National Standards for Testing and Balancing Heating, Ventilating, and Air Conditioning Systems
	AABC Associated Air Balance Council Testing and Balance Procedures
ASTM International	
ASTM C1060-90(1997)	Standard Practice for Thermographic Inspection of Insulation Installations in Envelope Cavities of Frame Buildings
ASTM E 779 (2003)	Standard Test Method for Determining Air Leakage Rate by Fan Pressurization
ASTM E1827-96(2002)	Standard Test Methods for Determining Airtightness of Buildings Using an Orifice Blower Door
Builders Hardware Manufacturers Association (BHMA)	
ANSI/BHMA	American National Standards for Builders Hardware

Building Industry Consulting Service International	
	Telecommunications Distribution Methods Manual (TDMM)
	Customer-Owned Outside Plant Design Manual (CO-OSP)
Code of Federal Regulations (CFR)	
49 CFR 192	Transportation of Natural and Other Gas by Pipeline: Minimum Federal Safety Standards
10 CFR 430	Energy Conservation Program for Consumer Products
Consumer Electronics Association	
CEA 709.1B	Control Network Protocol Specification
CEA 709.3	Free-Topology Twisted-Pair Channel Specification
CEA 852	Tunneling Component Network Protocols Over Internet Protocol Channels
Electronic Industries Association (EIA)	
ANSI/EIA/TIA 568	Structured Cabling Series
ANSI/EIA/TIA 569	Commercial Building Standard for Telecommunications Pathways and Spaces (includes ADDENDA)
ANSI/TIA/EIA-606	Administrative Standard for the Telecommunications Infrastructure of Commercial Buildings
J-STD EIA/TIA 607	Commercial Building Grounding and Bonding Requirements for Telecommunications
Federal Highway Administration (FHWA)	
	Manual on Uniform Traffic Control Devices for Streets and Highways [signage and pavement markings for streets and highways]
FHWA-NHI-01-021	Hydraulic Engineering Circular No. 22, Second Edition, URBAN DRAINAGE DESIGN MANUAL
Illuminating Engineering Society of North America (IESNA)	
IESNA RP-1	Office Lighting

IESNA RP-8	Roadway Lighting
IESNA Lighting Handbook	Reference and Application
Institute of Electrical and Electronics Engineers Inc. (IEEE)	
	Standard for Use of the International System of Units (SI): the Modern Metric System
Standard 1100	Recommended Practice for Powering and Grounding Sensitive Electronic Equipment
International Code Council (ICC)	
IBC	International Building Code Note: All references in the International Building Code to the International Electrical Code shall be considered to be references to NFPA 70. All references in the International Building Code to the International Fuel Gas Code shall be considered to be references to NFPA 54 and NFPA 58. All references in the International Building Code to the International Fire Code and Chapter 9 shall be considered to be references to Unified Facilities Criteria (UFC) 3-600-01.
IMC	International Mechanical Code – Note: For all references to “HEATING AND COOLING LOAD CALCULATIONS”, follow ASHRAE 90.1 Note: For all references to “VENTILATION”, follow ASHRAE 62.1
IRC	International Residential Code
IPC	International Plumbing Code
IEC	Energy Conservation Code (IEC) –Applicable only to the extent specifically referenced herein. Refer to Paragraph 5, ENERGY CONSERVATION requirements.
IGC	International Gas Code - not applicable. Follow NFPA 54, National Fuel Gas Code and NFPA 58, Liquified Petroleum Gas Code.
International Organization for Standardization (ISO)	
ISO 6781:1983	Qualitative detection of thermal irregularities in building envelopes –

	infrared method
LonMark International (LonMark)	
LonMark Interoperability Guidelines	(available at www.lonmark.org), including: Application Layer Guidelines, Layer 1-6 Guidelines, and External Interface File (XIF) Reference Guide
LonMark Resource Files	(available at www.lonmark.org), including Standard Network Variable Type (SNVT) definitions
Metal Building Manufacturers Association (MBMA)	
	Metal Building Systems Manual
Midwest Insulation Contractors Association (MICA)	
	National Commercial and Industrial Insulation Standards Manual
National Association of Corrosion Engineers International (NACE)	
NACE RP0169	Control of External Corrosion on Underground or Submerged Metallic Piping Systems
NACE RP0185	Extruded, Polyolefin Resin Coating Systems with Adhesives for Underground or Submerged Pipe
NACE RP0285	Corrosion Control of Underground Storage Tank Systems by Cathodic Protection
NACE RP0286	Electrical Isolation of Cathodically Protected Pipelines
National Electrical Manufacturers Association (NEMA)	
National Environmental Balancing Bureau (NEBB)	
	Procedural Standards Procedural Standards for Testing Adjusting Balancing of Environmental Systems
National Fire Protection Association (NFPA)	
NFPA 10	Standard for Portable Fire Extinguishers
NFPA 13	Installation of Sprinkler Systems
NFPA 13R	Residential Occupancies up to and Including Four Stories in Height Sprinkler Systems

NFPA 14	Standard for the Installation of Standpipes and Hose Systems
NFPA 20	Installation of Centrifugal Fire Pumps
NFPA 24 NFPA 25	Standard for the Installation of Private Fire Service Mains and Their Appurtenances [underground fire protection system design] Inspection, Testing And Maintenance Of Water-Based Fire Protection Systems
NFPA 30	Flammable and Combustible Liquids Code
NFPA 30A	Motor Fuel Dispensing Facilities and Repair Garages
NFPA 31	Installation of Oil Burning Equipment
NFPA 54	National Fuel Gas Code
NFPA 58	Liquefied Petroleum Gas Code
NFPA 70	National Electrical Code
NFPA 72	National Fire Alarm Code
NFPA 76	Fire Protection of Telecommunications Facilities
NFPA 80	Standard for Fire Doors and Fire Windows
NFPA 90a	Installation of Air Conditioning and Ventilating Systems
NFPA 96	Standard for Ventilation Control and Fire Protection of Commercial Cooking Operations
NFPA 101	Life Safety Code
NFPA 780	Standard for the Installation of Lightning Protection Systems
National Roofing Contractor's Association (NRCA)	
	Roofing and Waterproofing Manual
National Sanitation Foundation, International	
NSF/ANSI Std. 2, 3, 4, 5, 6, 7, 8, 12, 13, 18, 20, 21, 25, 29, 35, 36, 37, 51, 52, 59,	Food Equipment Standards

169	
ANSI/UL Std. 73, 197, 471, 621, 763	Food Equipment Standards
CSA Std. C22.2 No. 109, 120, 195	Food Equipment Standards
Occupational Safety and Health Administration (OSHA)	
Title 29, Part 1926	OSHA Construction Industry Standards, Title 29, Code of Federal Regulations, Part 1926, Safety and Health Regulations for Construction
Plumbing and Drainage Institute (PDI)	
PDI G 101	Testing and Rating Procedure for Grease Interceptors with Appendix of Sizing and Installation Data
PDI WH201	Water Hammer Arrestors
Precast Concrete Institute	
PCI Design Handbook	Precast and Prestressed Concrete
Sheet Metal and Air Conditioning Contractor's National Association (SMACNA)	
SMACNA HVAC Duct Construction Standards	HVAC Duct Construction Standards - Metal and Flexible
SMACNA Architectural Manual	Architectural Sheet Metal Manual
SMACNA HVAC TAB	HVAC Systems - Testing, Adjusting and Balancing
State/Local Regulations	
	State Department of Transportation Standard Specifications for Highway and Bridge Construction
	Sedimentation and Erosion Control Design Requirements
	Environmental Control Requirements
	Storm Water Management Requirements
Steel Door Institute (SDI)	

ANSI A250.8/SDI 100	Standard Steel Doors and Frames
Steel Deck Institute	
	SDI Diaphragm Design Manual
Steel Joist Institute	
	Catalog of Standard Specifications and Load Tables for Steel Joists and Joist Girders
Underwriters Laboratories (UL)	
UL 96A	Installation Requirements for Lightning Protection Systems
UL 300	Standard for Safety for Fire Testing of Fire Extinguishing Systems for Protection of Restaurant Cooking Areas
UNITED STATES ACCESS BOARD: U.S. ARCHITECTURAL AND TRANSPORTATION BARRIERS COMPLIANCE BOARD	
ADA and ABA Accessibility Guidelines for Buildings and Facilities	ABA Accessibility Standard for DoD Facilities Derived from the ADA and ABA Accessibility Guidelines: Specifically includes: ABA Chapters 1 and 2 and Chapters 3 through 10. Use this reference in lieu of IBC Chapter 11. Excluded are: (a) Facilities, or portions of facilities, on a military installation that are designed and constructed for use exclusively by able-bodied military personnel (See Paragraph 3 for any reference to this exclusion). (b) Reserve and National Guard facilities, or portions of such facilities, owned by or under the control of the Department of Defense, that are designed and constructed for use exclusively by able-bodied military personnel. (See paragraph 3 for any reference to this exclusion).
U.S. DEPARTMENT OF HEALTH AND HUMAN SERVICES	
	FDA National Food Code
U.S. GREEN BUILDING COUNCIL (USGBC)	
LEED-NC	Green Building Rating System for New Construction & Major Renovations
	Application Guide for Multiple Buildings and On-Campus Building Projects

4.2. MILITARY CRITERIA

The project shall conform to the following criteria. Certain design impacts and features due to these criteria are noted for the benefit of the offeror. However, all requirements of the referenced criteria will be applicable, whether noted or not, unless otherwise specified herein.

4.2.1. Energy Policy Act of 2005 (Public Law 109-58) (applies only to the extent specifically implemented in the contract, which may or may not directly cite or reference EPACT)

4.2.2. Executive Order 12770: Metric Usage In Federal Government

(a) Metric design and construction is required except when it increases construction cost. Offeror to determine most cost efficient system of measurement to be used for the project.

4.2.3. TB MED 530: Occupational and Environmental Health Food Sanitation

4.2.4. Unified Facilities Criteria (UFC) 3-410-01FA: Heating, Ventilating, and Air Conditioning - applicable only to the extent specified in paragraph 5, herein.

4.2.5. Deleted.

4.2.6. UFC 3-600-01 Design: Fire Protection Engineering for Facilities. Use the latest edition of the IBC in coordination with this UFC. Use Chapters 3, 6, 7, 33 and UFC 3-600-01. If any conflict occurs between these Chapters and UFC 3-600-01, the requirements of UFC 3-600-01 take precedence. Use UFC 3-600-01 in lieu of IBC Chapters 4, 8,9,10.

4.2.7. UFC 4-010-01 DoD Minimum Antiterrorism Standards for Buildings

4.2.8. UFC 4-023-03 Design of Buildings to Resist Progressive Collapse (Use most recent version, regardless of references thereto in other publications)

(a) Note the option to use tie force method or alternate path design for Occupancy Category II.

4.2.9. UFC 4-021-01 Design and O&M: Mass Notification Systems

4.2.10. Technical Criteria for Installation Information Infrastructure Architecture (I3A)

(a) Email: DetrickISECI3Aguide@conus.army.mil

4.2.11. U.S. Army Information Systems Engineering Command (USAISEC) TG for the Integration of SECRET Internet Protocol (IP) Router Network (SIPRNET). See Paragraph 3 for applicability to specific facility type. May not apply to every facility. This is mandatory criteria for those facilities with SIPRNET.

5.0 GENERAL TECHNICAL REQUIREMENTS

This paragraph contains general technical requirements. See also Paragraph 3 for facility-specific technical requirements. Residential or similar grade finishes and materials are not acceptable for inclusion in these buildings, unless otherwise specifically allowed.

5.1. SITE PLANNING AND DESIGN

5.1.1. STANDARDS AND CODES: The site planning and design shall conform to APPLICABLE CRITERIA and to paragraph 6, PROJECT SPECIFIC REQUIREMENTS.

5.1.2. SITE PLANNING OBJECTIVES: Group buildings in configurations that create a sense of community and promote pedestrian use. See paragraph 3 for additional site planning requirements relating to building functions.

5.1.2.1. Provide enclosures and or visual screening devices for Outdoor Utility such as dumpsters, emergency generators, transformers, heating, ventilation, and air conditioning units from streetscape and courtyard views to limit visual impact. Enclosures shall be compatible with the building they serve and accessible by vehicle. The location of dumpsters can have a significant visual impact and should be addressed as part of an overall building design and incorporated in site planning.

5.1.2.2. Where included in the project, dumpster pads shall be concrete (minimum of 8 inches thick on 4 inch base course, unless site conditions dictate more conservative requirements) and directly accessible by way of a paved service drive or parking lot with adequate overhead clearance for collection vehicles. Provide space at dumpster areas for recycling receptacles. Coordinate with Installation on recycling receptacle types, sizes and access requirements and provide space at dumpster areas to accommodate them.

5.1.2.3. Vehicular Circulation. Apply design vehicle templates provided by the American Association of State Highway and Transportation Officials (AASHTO) to the site design. The passenger car class includes passenger cars and light trucks, such as vans and pick-ups. The passenger car template is equivalent to the non-organizational – privately owned vehicle (POV). The truck class template includes single-unit trucks, recreation vehicles, buses, truck tractor-semi-trailer combinations, and trucks or truck tractors with semi-trailers in combination with full trailers. Provide vehicle clearances required to meet traffic safety for emergency vehicles, service vehicles, and moving vans. Provide required traffic control signage Site entrances and site drive aisles shall maximize spacing between drives, incorporate right-angle turns, and limit points of conflict between traffic. Design Services Drives to restrict access to unauthorized vehicles by removable bollards, gates, or other barriers to meet Anti-Terrorism/Force Protection (ATFP) requirements. Orient service drives to building entrances other than the primary pedestrian entry at the front of the building.

5.1.2.4. Provide Emergency Vehicle Access around the facility and shall be in accordance with AT/FP requirements. Maintain a 33-foot clear zone buffer for emergency vehicles, designed to prevent other vehicles from entering the AT/FP standoff to the building.

5.1.2.5. Clear and grub all trees and vegetation necessary for construction; but, save as many trees as possible. Protect trees to be saved during the construction process from equipment.

5.1.2.6. Stormwater Management. Employ design and construction strategies (Best Management Practices) that reduce stormwater runoff, reduce discharges of polluted water offsite and maintain or restore predevelopment hydrology with respect to temperature, rate, volume and duration of flow to the maximum extent practicable. See paragraph 6, PROJECT SPECIFIC requirements for additional information.

5.1.3. EXTERIOR SIGNAGE: Provide exterior signage in accordance with Appendix H, Exterior Signage. Provide exterior NO SMOKING signage that conveys building and grounds smoking policy.

5.1.4. EXISTING UTILITIES: Base utilities maps and capacities for this site are included as part of this RFP. See paragraph 6 for more detailed information.

5.2. SITE ENGINEERING

5.2.1. STANDARDS AND CODES: The site engineering shall conform to APPLICABLE CRITERIA.

5.2.2. SOILS:

5.2.2.1. A report has been prepared to characterize the subsurface conditions at the project site and is **appended to these specifications.** The report provides a general overview of the soil and geologic conditions with detailed descriptions at discrete boring locations. The Contractor's team shall include a licensed geotechnical engineer to interpret the report and develop earthwork and foundation recommendations and design parameters in which to base the contractor's design. If any additional subsurface investigation or laboratory analysis is required to better characterize the site or develop the final design, the Contractor shall perform it under the direction of a licensed geotechnical engineer. There will be no separate payment for the cost of additional tests. If differences between the Contractor's additional subsurface investigation and the government provided soils report or the reasonably expected conditions require material revisions in the design, an equitable adjustment may be made, in accordance with the provisions of the Differing Site Conditions clause. The basis for the adjustment would be the design and construction appropriate for the conditions described in the Government furnished report or the reasonably expected conditions, in comparison with any changes required by material differences in the actual conditions encountered, in accordance with the terms of contract clause Differing Site Conditions.

5.2.2.2. The contractor's licensed geotechnical engineer shall prepare a final geotechnical evaluation report, to be submitted along with the first foundation design submittal, as described in Section 01 33 16, *Design After Award*.

5.2.3. VEHICLE PAVEMENTS: (as applicable to the project)

5.2.3.1. Design procedures and materials shall conform to one of the following: 1) the USACE Pavement Transportation Computer Assisted Structural Engineering (PCASE) program, 2) American Association of State Highway and Transportation Officials (AASHTO) or, 3) the applicable state Department of Transportation standards in which the project is located. See paragraph 5.2.2.2 and Section 01 33 16 for required information for the Contractor's geotechnical evaluation report. The minimum flexible pavement section shall consist of 2 inches of asphalt and 6 inches of base or as required by the pavement design, whichever is greater, unless specifically identified by the Government to be a gravel road. Design roads and parking areas for a life expectance of 25 years with normal maintenance. Parking area for tactical vehicles (as applicable to the project) shall be Portland Cement Concrete (PCC) rigid pavement design. For concrete pavements, submit joint layout plan for review and concurrence. Design pavements for military tracked vehicles (as applicable to the project) IAW USACE PCASE. Traffic estimates for each roadway area will be as shown on the drawings or listed in Section 01 10 00 Paragraph 6.4.4. Pavement markings and traffic signage shall comply with the Installation requirements and with the Manual on Uniform Traffic Control Devices.

5.2.3.2. Parking Requirements.

(a) All handicap POV parking lots (where applicable in the facility specific requirements) shall meet the ADA and ABA Accessibility Guidelines for accessible parking spaces.

(b) Design POV parking spaces for the type of vehicles anticipated, but shall be a minimum of 9 ft by 18 ft for POVs, except for two wheel vehicles.

5.2.3.3. Sidewalks. Design the network of walks throughout the complex (where applicable) to facilitate pedestrian traffic among facilities, and minimize the need to use vehicles. Incorporate sidewalks to enhance the appearance of the site development, while creating a sense of entry at the primary patron entrances to the buildings. Minimum sidewalk requirements are in Paragraph 3, where applicable.

5.2.4. CATHODIC PROTECTION: Provide cathodic protection systems for all underground metallic systems and metallic fittings/portions of non-metallic, underground systems, both inside and outside the building 5 foot line that are subject to corrosion. Coordinate final solutions with the installation to insure an approach that is consistent with installation cathodic protection programs.

5.2.5. UTILITIES: See paragraph 6.4.6 for specific information on ownership of utilities and utility requirements. Meter all utilities (gas, water, and electric, as applicable) to each facility. For Government owned utilities, install meters that are wireless data transmission capable as well as have a continuous manual reading option. All meters will be capable of at least hourly data logging and transmission and provide consumption data for gas, water, and electricity. Gas and electric meters will also provide demand readings based on consumption over a maximum of

any 15 minute period. Configure all meters to transmit at least daily even if no receiver for the data is currently available at the time of project acceptance. For privatized utilities, coordinate with the privatization utility(ies) for the proper meter base and meter installation.

5.2.6. PERMITS: The CONTRACTOR shall be responsible for obtaining all permits (local, state and federal) required for design and construction of all site features and utilities.

5.2.7. IRRIGATION. Landscape irrigation systems, if provided, shall comply with the following:

5.2.7.1. Irrigation Potable Water Use Reduction. Reduce irrigation potable water use by 100 percent using LEED credit WE1.1 baseline (no potable water used for irrigation), except where precluded by other project requirements.

5.2.8. EPA WaterSense Products and Contractors. Except where precluded by other project requirements, use EPA WaterSense labeled products and irrigation contractors that are certified through a WaterSense labeled program where available.

5.3. ARCHITECTURE AND INTERIOR DESIGN:

This element will be evaluated per APPLICABLE CRITERIA under the quality focus.

5.3.1. STANDARDS AND CODES: The architecture and interior design shall conform to APPLICABLE CRITERIA.

5.3.2. GENERAL: Overall architectural goal is to provide a functional, quality, visually appealing facility that is a source of pride for the installation and delivered within the available budget and schedule.

5.3.3. COMPUTATION OF AREAS: See APPENDIX Q for how to compute gross and net areas of the facility(ies).

5.3.4. BUILDING EXTERIOR: Design buildings to enhance or compliment the visual environment of the Installation. Where appropriate, reflect a human scale to the facility. Building entrance should be architecturally defined and easily seen. When practical, exterior materials, roof forms, and detailing shall be compatible with the surrounding development and adjacent buildings on the Installation and follow locally established architectural themes. Use durable materials that are easy to maintain. Exterior colors shall conform to the Installation requirements. See paragraph 6.

5.3.4.1. Building Numbers: Each building shall have exterior signage permanently attached on two faces of the building indicating the assigned building number or address. Building number signage details and locations shall conform to Appendix H, Exterior Signage.

5.3.5. BUILDING INTERIOR

5.3.5.1. Space Configuration: Arrange spaces in an efficient and functional manner in accordance with area adjacency matrices.

5.3.5.2. Surfaces: Appearance retention is the top priority for building and furniture related finishes. Provide low maintenance, easily cleaned room finishes that are commercially standard for the facility occupancy specified, unless noted otherwise.

5.3.5.3. Color: The color, texture and pattern selections for the finishes of the building shall provide an aesthetically pleasing, comfortable, easily maintainable and functional environment for the occupants. Coordination of the building colors and finishes is necessary for a cohesive design. Color selections shall be appropriate for the building type. The use of color, texture and pattern shall be used to path or way find through the building. Trendy colors that will become dated shall be limited to non-permanent finishes such as carpet and paint. Finishes should be selected with regards to aesthetics, maintenance, durability, life safety and image. Limit the number of similar colors for each material. Color of Ceramic and porcelain tile grout shall be medium range color to help hide soiling. Plastic laminate and solid surface materials shall have patterns that are mottled, flecked or speckled. Finish colors of fire extinguisher cabinets, receptacle bodies and plates, fire alarms / warning lights, emergency lighting, and other miscellaneous items shall be coordinated with the building interior. Color of equipment items on ceilings (speakers, smoke detectors, grills, etc.) shall match the ceiling color.

5.3.5.4. Circulation: Circulation schemes must support easy way finding within the building.

5.3.5.5. Signage: Provide interior signage for overall way finding and life safety requirements. A comprehensive interior plan shall be from one manufacturer. Include the following sign types: (1) Lobby Directory, (2) Directional Signs; (3) Room Identification Signs; (4) Building Service Signs; (5) Regulatory Signs; (6) Official and Unofficial Signs (7) Visual Communication Boards (8) NO SMOKING signage that conveys building smoking policy. Use of emblems or logos may also be incorporated into the signage plan.

5.3.5.6. Window Treatment: Interior window treatments with adjustable control shall be provided in all exterior window locations for control of day light coming in windows or privacy at night. Uniformity of treatment color and material shall be maintained to the maximum extent possible within a building.

5.3.6. COMPREHENSIVE INTERIOR DESIGN

5.3.6.1. Comprehensive Interior Design includes the integration of a Structural Interior Design (SID) and a Furniture, Fixtures and Equipment (FF&E) design and package. SID requires the design, selection and coordination of interior finish materials that are integral to or attached to the building structure. Completion of a SID involves the selection and specification of applied finishes for the building's interior features including, but not limited to, walls, floors, ceilings, trims, doors, windows, window treatments, built-in furnishings and installed equipment, lighting, and signage. The SID package includes finish schedules, finish samples and any supporting interior elevations, details or plans necessary to communicate the building finish design and build out. The SID also provides basic space planning for the anticipated FF&E requirements in conjunction with the functional layout of the building and design issues such as life safety, privacy, acoustics, lighting, ventilation, and accessibility. See Section 01 33 16 for SID design procedures.

The FF&E design and package includes the design, selection, color coordination and of the required furnishing items necessary to meet the functional, operational, sustainability, and aesthetic needs of the facility coordinated with the interior finish materials in the SID. The FF&E package includes the specification, procurement documentation, placement plans, ordering and finish information on all freestanding furnishings and accessories, and a cost estimate. Coordinate the selection of furniture style, function and configuration with the defined requirements. Examples of FF&E items include, but are not limited to workstations, seating, files, tables, beds, wardrobes, draperies and accessories as well as marker boards, tack boards, and presentation screens. Criteria for furniture selection include function and ergonomics, maintenance, durability, sustainability, comfort and cost. See Section 01 33 16 for FFE design procedures.

5.4. STRUCTURAL DESIGN

5.4.1. STANDARDS AND CODES: The structural design shall conform to APPLICABLE CRITERIA.

5.4.2. GENERAL: The structural system needs to be compatible with the intended functions and components that allows for future flexibility and reconfigurations of the interior space. Select an economical structural system based upon facility size, projected load requirements and local availability of materials and labor. Base the structural design on accurate, site specific geotechnical information and anticipated loads for the building types and geographical location. Consider climate conditions, high humidity, industrial atmosphere, saltwater exposure, or other adverse conditions when selecting the type of cement and admixtures used in concrete, the concrete cover on reinforcing steel, the coatings on structural members, expansion joints, the level of corrosion protection, and the structural systems. Analyze, design and detail each building as a complete structural system. Design structural elements to preclude damage to finishes, partitions and other frangible, non-structural elements to prevent impaired operability of moveable components; and to prevent cladding leakage and roof ponding. Limit deflections of structural members to the allowable of the applicable material standard, e.g., ACI, AISC, Brick Industry Association, etc. When modular units or other pre-fabricated construction is used or combined with stick-built construction, fully coordinate and integrate the overall structural design between the two different or interfacing construction types. If the state that the project is located in requires separate, specific licensing for structural engineers (for instance, such as in Florida, California and others), then the structural engineer designer of record must be registered in that state.

5.4.3. LOADS: See paragraph 3 for facility specific (if applicable) and paragraph 6 for site and project specific structural loading criteria. Unless otherwise specified in paragraph 6, use Exposure Category C for wind. If not specified, use Category C unless the Designer of Record can satisfactorily justify another Exposure Category in its

design analysis based on the facility Master Plan. Submit such exceptions for approval as early as possible and prior to the Interim Design Submittal in Section “Design After Award”. In addition to gravity, seismic and lateral loads, design the ancillary building items, e.g. doors, window jambs and connections, overhead architectural features, equipment bracing, for the requirements of UFC 4-010-01, DOD Minimum Antiterrorism Standards for Buildings. Ensure and document that the design of glazed items includes, but is not limited to, the following items under the design loads prescribed in UFC 4-010-01:

(a) Supporting members of glazed elements, e.g. window jamb, sill, header

(b) Connections of glazed element to supporting members, e.g. window to header

(c) Connections of supporting members to each other, e.g. header to jamb

(d) Connections of supporting members to structural system, e.g. jamb to foundation.

5.4.4. TERMITE TREATMENT: (Except Alaska) Provide termite prevention treatment in accordance with Installation and local building code requirements, using licensed chemicals and licensed applicator firm.

5.5. THERMAL PERFORMANCE

5.5.1. STANDARDS AND CODES: Building construction and thermal insulation for mechanical systems shall conform to APPLICABLE CRITERIA.

5.5.2. BUILDING ENVELOPE SEALING PERFORMANCE REQUIREMENT. Design and construct the building envelope for office buildings, office portions of mixed office and open space (e.g., company operations facilities), dining, barracks and instructional/training facilities with a continuous air barrier to control air leakage into, or out of, the conditioned space. Clearly identify all air barrier components of each envelope assembly on construction documents and detail the joints, interconnections and penetrations of the air barrier components. Clearly identify the boundary limits of the building air barriers, and of the zone or zones to be tested for building air tightness on the drawings.

5.5.2.1. Trace a continuous plane of air-tightness throughout the building envelope and make flexible and seal all moving joints.

5.5.2.2. The air barrier material(s) must have an air permeance not to exceed 0.004 cfm / sf at 0.3” wg (0.02 L/s.m2 @ 75 Pa) when tested in accordance with ASTM E 2178

5.5.2.3. Join and seal the air barrier material of each assembly in a flexible manner to the air barrier material of adjacent assemblies, allowing for the relative movement of these assemblies and components.

5.5.2.4. Support the air barrier so as to withstand the maximum positive and negative air pressure to be placed on the building without displacement, or damage, and transfer the load to the structure.

5.5.2.5. Seal all penetrations of the air barrier. If any unavoidable penetrations of the air barrier by electrical boxes, plumbing fixture boxes, and other assemblies are not airtight, make them airtight by sealing the assembly and the interface between the assembly and the air barrier or by extending the air barrier over the assembly.

5.5.2.6. The air barrier must be durable to last the anticipated service life of the assembly.

5.5.2.7. Do not install lighting fixtures with ventilation holes through the air barrier

5.5.2.8. Provide a motorized damper in the closed position and connected to the fire alarm system to open on call and fail in the open position for any fixed open louvers such as at elevator shafts.

5.5.2.9. Damper and control to close all ventilation or make-up air intakes and exhausts, atrium smoke exhausts and intakes, etc when leakage can occur during inactive periods.

5.5.2.10. Compartmentalize garages under buildings by providing air-tight vestibules at building access points.

5.5.2.11. Compartmentalize spaces under negative pressure such as boiler rooms and provide make-up air for combustion.

5.5.2.12. Performance Criteria and Substantiation: Submit the qualifications and experience of the testing entity for approval. Demonstrate performance of the continuous air barrier for the opaque building envelope by the following tests:

(a) Test the completed building and demonstrate that the air leakage rate of the building envelope does not exceed 0.25cfm/ft2 at a pressure differential of 0.3" w.g.(75 Pa) in accordance with ASTM's E 779 (2003) or E-1827-96 (2002). Accomplish tests using either pressurization or depressurization or both. Divide the volume of air leakage in cfm @ 0.3" w.g. (L/s @ 75 Pa) by the area of the pressure boundary of the building, including roof or ceiling, walls and floor to produce the air leakage rate in cfm/ft2 @ 0.3" w.g. (L/s.m2 @ 75 Pa). Do not test the building until verifying that the continuous air barrier is in place and installed without failures in accordance with installation instructions so that repairs to the continuous air barrier, if needed to comply with the required air leakage rate, can be done in a timely manner.

(b) Test the completed building using Infrared Thermography testing. Use infrared cameras with a resolution of 0.1deg C or better. Perform testing on the building envelope in accordance with ISO 6781:1983 and ASTM C1060-90(1997). Determine air leakage pathways using ASTM E 1186-03 Standard Practices for Air Leakage Site Detection in Building Envelopes and Air Barrier Systems, and perform corrective work as necessary to achieve the whole building air leakage rate specified in (a) above.

(c) Notify the Government at least three working days prior to the tests to provide the Government the opportunity to witness the tests. Provide the Government written test results confirming the results of all tests.

5.6. PLUMBING

5.6.1. STANDARDS AND CODES: The plumbing system shall conform to APPLICABLE CRITERIA.

5.6.2. PRECAUTIONS FOR EXPANSIVE SOILS: Where expansive soils are present, the design for underslab piping systems and underground piping serving chillers, cooling towers, etc, shall include features to control forces resulting from soil heave. Some possible solutions include, but are not necessarily limited to, features such as flexible expansion joints, slip joints, horizontal offsets with ball joints, or multiple bell and spigot gasketed fittings. For structurally supported slabs, piping should be suspended from the structure with adequate space provided below the pipe for the anticipated soil movement.

5.6.3. HOT WATER SYSTEMS: For Hot Water heating and supply, provide a minimum temp of 140 Deg F in the storage tank and a maximum of 110 Deg F at the fixture, unless specific appliances or equipment specifically require higher temperature water supply.

5.6.4. SIZING HOT WATER SYSTEMS: Unless otherwise specified or directed in paragraph 3, design in accordance with ASHRAE Handbook Series (appropriate Chapters), ASHRAE Standard 90.1, and the energy conservation requirements of the contract. Size and place equipment so that it is easily accessible and removable for repair or replacement.

5.6.5. JANITOR CLOSETS: In janitor spaces/room/closets, provide at minimum, a service sink with heavy duty shelf and wall hung mop and broom rack(s).

5.6.6. FLOOR DRAINS: As a minimum, provide floor drains in mechanical rooms and areas, janitor spaces/rooms/closets and any other area that requires drainage from fixtures or equipment, drain downs, condensate, as necessary.

5.6.7. URINALS: Urinals shall be vitreous china, wall-mounted, wall outlet, non-water using, with integral drain line connection, and with sealed replaceable cartridge or integral liquid seal trap. Either type shall use a biodegradable liquid to provide the seal and maintain a sanitary and odor-free environment. Install, test and maintain in accordance with manufacturer's recommendations. Slope the sanitary sewer branch line for non-water use urinals a minimum of 1/4 inch per foot. Do not use copper tube or pipe for drain lines that connect to the urinal. Manufacturer shall provide an operating manual and on-site training to installation operations personnel for the proper care and maintenance of the urinal. For complexes, non-water using urinals are not required for barracks type spaces.

5.6.8. BUILDING WATER USE REDUCTION. Reduce building potable water use in each building 30 percent using IPC fixture performance requirements baseline.

5.6.9. Do not use engineered vent or Sovent® type drainage systems.

5.6.10. Where the seasonal design temperature of the cold water entering a building is below the seasonal design dew point of the indoor ambient air, and where condensate drip will cause damage or create a hazard, insulate plumbing piping with a vapor barrier type of insulation to prevent condensation. Do not locate water or drainage piping over electrical wiring or equipment unless adequate protection against water (including condensation) damage is provided. Insulation alone is not adequate protection against condensation. Follow ASHRAE Fundamentals Chapter 23, Insulation for Mechanical Systems, IMC paragraph 1107 and International Energy Conservation Code for pipe insulation requirements.

5.7. ELECTRICAL AND TELECOMMUNICATIONS SYSTEMS

5.7.1. STANDARDS AND CODES: The electrical systems for all facilities shall conform to APPLICABLE CRITERIA.

5.7.2. MATERIALS AND EQUIPMENT: Materials, equipment and devices shall, as a minimum, meet the requirements of Underwriters Laboratories (UL) where UL standards are established for those items. Wiring for branch circuits shall be copper. Motors larger than one-half horsepower shall be three phase. All electrical systems shall be pre-wired and fully operational unless otherwise indicated. Wall mounted electrical devices (power receptacles, communication outlets and CATV outlets) shall have matching colors, mounting heights and faceplates.

5.7.3. POWER SERVICE: Primary service from the base electrical distribution system to the pad-mounted transformer and secondary service from the transformer to the building service electrical equipment room shall be underground. See paragraph 6 for additional site electrical requirements.

5.7.3.1. Spare Capacity: Provide 10% space for future circuit breakers in all panelboards serving residential areas of buildings and 15% spaces in all other panelboards.

5.7.4. TELECOMMUNICATION SERVICE: The project's facilities must connect to the Installation telecommunications (voice and data) system through the outside plant (OSP) telecommunications underground infrastructure cabling system per the I3A Criteria. Connect to the OSP cabling system from each facility main cross connect located in the telecommunications room.

5.7.5. LIGHTING: Comply with the recommendations of the Illumination Engineering Society of North America (IESNA), the National Energy Policy Act and Energy Star requirements for lighting products..

5.7.5.1. Interior Lighting:

(a) Reflective Surfaces: Coordinate interior architectural space surfaces and colors with the lighting systems to provide the most energy-efficient workable combinations.

(b) High Efficiency Fluorescent Lighting: Utilize NEMA premium electronic ballasts and energy efficient fluorescent lamps with a Correlated Color Temperature (CCT) of 4100K. Linear fluorescent and compact fluorescent fixtures shall have a Color Rendering Index of (CRI) of 87 or higher. Fluorescent lamps shall be the low mercury type qualifying as non-hazardous waste upon disposal. Do not use surface mounted fixtures on acoustical tile ceilings. Provide an un-switched fixture with emergency ballast shall be provided at each entrance to the building.

(c) Solid State Lighting: Fixtures shall provide lighting with a minimum Correlated Color Temperature (CCT) of 4100K and shall have a Color Rendering Index of (CRI) of 75 or higher. Verify performance of the light producing solid state components by a test report in compliance with the requirements of IESNA LM 80. Verify performance of the solid state light fixtures by a test report in compliance with the requirements of IESNA LM 79. Provide lab results by a NVLAP certified laboratory. The light producing solid state components and drivers shall have a life expectancy of 50,000 operating hours while maintaining at least 70% of original illumination level. Provide a complete five year warranty for fixtures.

(d) Metal Halide Lighting (where applicable): Metal Halide lamp fixtures in the range of 150-500 Watts shall be pulse start type and have a minimum efficiency rating of 88%.

(e) Lighting Controls: ANSI/ASHRAE/IESNA 90.1 has specific lighting controls requirements. Provide a high level of lighting system control by individual occupants or by specific groups in multi-occupant spaces (classrooms, conference rooms) to promote the productivity, comfort and well being of the building occupants. In office spaces, the preferred lighting should be a 30 FC ambient lighting level with occupancy sensor controlled task lighting in the work spaces to provide a composite lighting level of 50 FC on the working surfaces. Consider incorporating daylighting techniques for the benefit of reducing lighting energy requirements while improving the quality of the indoor spaces. If daylight strategies are used, additional coordination is required with the architect and mechanical engineer. Additionally, incorporate electric lighting controls to take advantage of the potential energy savings.

(f) Exterior Lighting: See paragraph 6.9 for site specific information, if any, on exterior lighting systems. Minimize light pollution and light trespass by not over lighting and use cutoff type exterior luminaries.

5.7.6. TELECOMMUNICATION SYSTEM: All building telecommunications cabling systems (BCS) and OSP telecommunications cabling system shall conform to APPLICABLE CRITERIA to include I3A Technical Criteria. An acceptable BCS encompasses, but is not limited to, copper and fiber optic (FO) entrance cable, termination equipment, copper and fiber backbone cable, copper and fiber horizontal distribution cable, workstation outlets, racks, cable management, patch panels, cable tray, cable ladder, conduits, grounding, and labeling.. Items included under OSP infrastructure encompass, but are not limited to, manhole and duct infrastructure, copper cable, fiber optic cable, cross connects, terminations, cable vaults, and copper and FO entrance cable.

5.7.6.1. Design, install, label and test all telecommunications systems in accordance with the I3A Criteria and ANSI/TIA/EIA 568, 569, and 606 standards. A Building Industry Consulting Services International (BICSI) Registered Communications Distribution Designer (RCDD) with at least 2 yrs related experience shall develop and stamp telecommunications design, and prepare the test plan. See paragraph 5.8.2.5 for design of environmental systems for Telecommunications Rooms.

5.7.6.2. The installers assigned to the installation of the telecommunications system or any of its components shall be regularly and professionally engaged in the business of the application, installation and testing of the specified telecommunications systems and equipment. Key personnel; i.e., supervisors and lead installers assigned to the installation of this system or any of its components shall be BICSI Registered Cabling Installers, Technician Level. Submit documentation of current BICSI certification for each of the key personnel. In lieu of BICSI certification, supervisors and installers shall have a minimum of 5 years experience in the installation of the specified copper and fiber optic cable and components. They shall have factory or factory approved certification from each equipment manufacturer indicating that they are qualified to install and test the provided products.

5.7.6.3. Perform a comprehensive end to end test of all circuits to include all copper and fiber optic cables upon completion of the BCS and prior to acceptance of the facility. The BCS circuits include but are not limited to all copper and fiber optic(FO) entrance cables, termination equipment, copper and fiber backbone cable, copper and fiber horizontal distribution cable, and workstation outlets. Test in accordance with ANSI/EIA/TIA 568 standards. Use test instrumentation that meets or exceeds the standard. Submit the official test report to include test procedures, parameters tested, values, discrepancies and corrective actions in electronic format. Test and accomplish all necessary corrective actions to ensure that the government receives a fully operational, standards based, code compliant telecommunications system.

5.7.7. LIGHTNING PROTECTION SYSTEM: Provide a lightning protection system where recommended by the Lightning Risk Assessment of NFPA 780, Annex L.

5.8. HEATING, VENTILATING, AND AIR CONDITIONING

5.8.1. STANDARDS AND CODES: The HVAC system shall conform to APPLICABLE CRITERIA.

5.8.2. DESIGN CONDITIONS.

5.8.2.1. Outdoor and indoor design conditions shall be in accordance with UFC 3-410-01FA. Outdoor air and exhaust ventilation requirements for indoor air quality shall be in accordance with ASHRAE 62.1. All Buildings with minimum LEED Silver requirement (or better) will earn LEED Credit EQ 7.1, Thermal Comfort-Design.

5.8.2.2. Design systems in geographical areas that meet the definition for high humidity in UFC 3-410-01FA in accordance with the special criteria for humid areas therein.

5.8.2.3. Cooling equipment may be oversized by up to 15 percent to account for recovery from night setforward. Heating equipment may be oversized by up to 30 percent to account for recovery from night setback. Design single zone systems and multi-zone systems to maintain an indoor design condition of 50% relative humidity for cooling only. For heating only where the indoor relative humidity is expected to fall below 20% for extended periods, add humidification to increase the indoor relative humidity to 30%. Provide ventilation air from a separate dedicated air handling unit (DOAU) for facilities using multiple single zone fan-coil type HVAC systems. Do not condition outside air through fan coil units. Avoid the use of direct expansion cooling coils in air handling units with constant running fans that handle outside air.

5.8.2.4. Locate all equipment so that service, adjustment and replacement of controls or internal components are readily accessible for easy maintenance.

5.8.2.5. Environmental Requirements for Telecommunications Rooms,(including SIPRNET ROOMS, where applicable for specific facility type). Comply with ANSI/EIA/TIA 569 and the I3A.

5.8.2.6. Fire dampers: dynamic type with a dynamic rating suitable for the maximum air velocity and pressure differential to which the damper is subjected. Test each fire damper with the air handling and distribution system running.

5.8.3. BUILDING AUTOMATION SYSTEM. The Building Automation System (BAS) shall be a single complete non-proprietary Direct Digital Control (DDC) system for control of the heating, ventilating and air conditioning (HVAC) and other building systems. The BAS shall be based on an Open implementation of BACnet using ASHRAE 135-2004 exclusively as the communications protocol for communication between DDC Hardware devices to allow multi-vendor interoperability. The building BAS shall include integration to a basewide supervisory monitoring and control (M&C) system.

5.8.3.1. The system shall be Open in that it is designed and installed such that the Government or its agents are able to perform repair, replacement, upgrades, and expansions of the system without further dependence on the original hardware vendor or their agents. This includes, but is not limited to the following:

- Hardware shall be installed such that individual control equipment can be replaced by similar control equipment from other equipment manufacturers with no loss of system functionality.
- Necessary documentation (including rights to documentation and data), configuration information, configuration tools, application programs (with comments explaining program logic), application source code for programmable controllers, drivers, and other software shall be licensed to and remain with the Government such that the Government or its agents are able to perform repair, replacement, upgrades, and expansions of the system without subsequent or future dependence on the Contractor.

5.8.3.2. All DDC Hardware shall:

- Be connected to a ASHRAE 135 MS/TP control network.
- Implement all required functionality of the application network interface via BACnet objects, properties, and services
- Shall conform to basewide addressing schemes, particularly with regard to Device ID.
- Minimize the use of proprietary BACnet objects and properties
- Not use any of the following BACnet services for application control functionality or communication:
  - AtomicFile or AtomicFileWrite
  - ConfirmedTextMessage or UnconfirmedTextMessage
  - ConfirmedPrivateTransfer or UnconfirmedPrivateTransfer
- Communicate over the control network via ASHRAE 135 exclusively.
- Conform to the BACnet Testing Lab's Device Implementation Guidelines.
- Be capable of responding to Who-Is/I-Am and Who-Has/I-Have service requests.
- All settings and parameters used by the application shall be fully configurable:
  - to the greatest extent possible, via properties of BACnet objects that can be written to via BACnet services.
  - via properties of BACnet objects that can be written to via BACnet services for the following

- Setpoint
- Alarm limit
- Schedule modification
- Trend modification
    - All other settings and parameters that can not be written to via BACnet services shall be fully configurable via either:
- Properties of BACnet objects that can be written to with a configuration tool, or
- Hardware settings on the controller itself to support the application.
- Provide BACnet objects, properties, and services required to support the application and supervisory monitoring and control functionality including:
    - System start/stop and overrides.
    - Scheduling
    - Alarming
    - Trending
- To the greatest extent practical, not rely on the control network to perform the application
- Be BTL Listed

5.8.3.3. Include any device capable of communicating over IEEE 802.3 (Ethernet) in a DIACAP and Certificate of Networthiness (CoN) for this installation, regardless of whether the Ethernet connection is active at time of installation. Do not use devices with Ethernet connection capability not included in a DIACAP or without a DIACAP or without a CoN shall not be used.

5.8.3.4. Gateways may be used provided that each gateway communicates with and performs protocol translation for control hardware controlling one and only one package unit.

5.8.3.5. Not Used

5.8.3.6. Perform all necessary actions needed to fully integrate the ASHRAE 135-based building control system to the UMCS. These actions include but are not limited to:

- Install BACnet MS/TP-to-IP routers and/or BACnet/IP Broadcast Management Devices (BBMD) in accordance with ASHRAE 135 Annex J as needed to connect the building control network to the UMCS IP network. Devices shall be capable of configuration via DHCP and Write-Broadcast-Distribution-Table messages but shall not rely on these services for configuration. All communication between the UMCS and building networks shall be via BACnet/IP and in accordance with ASHRAE 135. Any IP network work including access to existing networks shall be coordinated with the installation Network Enterprise Center (NEC).
- Configure M&C Software functionality including: graphical pages for System Graphic Displays including overrides, alarm handling, scheduling, trends for critical values needing long-term or permanent monitoring via trends, and demand limiting.
- Configure M&C software to provide hierarchically arranged screens to allow operator to configure (via BACnet services to the appropriate objects) all devices on the installation BACnet internetwork. The following adjustments shall be supported:
    - Setpoints
    - Alarm limits
    - Schedules
    - Trends

This requirement is separate from and in addition to the requirement to provide all necessary programming and configuration software.

5.8.3.7. Perform all necessary actions needed to integrate legacy systems to the UMCS. Configure M&C Software functionality including: graphical pages for System Graphic Displays including overrides, alarm handling, scheduling, trends for critical values needing long-term or permanent monitoring via trends, and demand limiting. Integration may be via drivers in the M&C Software or hardware gateways may be provided. Where hardware gateways are provided, include all hardware, software, software licenses, and configuration tools required for gateway operation, modification, and maintenance. Configure software driver or a hardware gateway to support M&C software functionality as listed above.

5.8.3.8. Provide the following to the Government for review prior to acceptance of the system:

- The latest version of all software including source code for application software (for programmable controllers), software licenses, and user manuals required to program, configure and operate the system.
- Points Schedule drawing that shows every DDC Hardware device. The Points Schedule shall contain the following information as a minimum for each device:
  - Device ID and network address (MS/TP network and MAC address, or IP address).
  - Input and Output Objects including Name, Type, Description, and relevant supported or required Properties.
  - Hardware I/O, including Type (AI, AO, BI, BO) and Description.
  - Alarm information including alarm limits and BACnet device IDs, object IDs, and property information.
  - Supervisory control information including BACnet device IDs, object IDs, and properties for trending and overrides.
  - Objects and Properties needed for device configuration.
  - Device IDs and objects (where applicable) of remote devices and objects that communicate with the given Device (e.g. clients and servers for BACnet services used by the given device).
  - Example Points Schedules are available at: https://eko.usace.army.mil/fa/besc/
- Riser diagram of the network showing all network cabling and hardware. Label hardware with BACnet Device IDs, BACnet network addresses, network names, and locations.
- A consolidated list of all Device IDs.
- Control System Schematic diagram and Sequence of Operation for each controlled system.
- Operation and Maintenance Instructions including procedures for system start-up, operation and shut-down, a routine maintenance checklist, and a qualified service organization list.
- Quality Control (QC) checklist (below) completed by the Contractor's Chief Quality Control (QC) Representative

Table 5-1: QC Checklist

Instructions: Initial each item, sign and date verifying that the requirements have been met.

#	Description	Initials
1	All DDC Hardware is installed on a MS/TP or IP local control bus IAW ASHRAE135 section 9 or Annex J.	
2	Communication between DDC Hardware is only via ASHRAE 135. PrivateTransfer, TextMessage, or AtomicFile services have not been used.	
3	All sequences are performed using DDC Hardware.	
4	All software has been licensed to the Government	
5	Final As-built Drawings accurately represent the final installed system.	
6	O&M Instructions have been completed and submitted.	
7	All DDC hardware connected or intended to be connected to the IP network is covered under a DIACAP and has a certificate of Networthiness	
8	M&C software monitoring displays have been created for all building systems, including all override and display points indicated on Points Schedule drawings	
9	Connections between the UMCS IP network and ASHRAE 135 building networks is in accordance with ASHRAE 135 Annex J, including BACnet Broadcast Management Devices (BBMDs) as needed.	

By signing below I verify that all requirements of the contract, including but not limited to the above, been met.

Signature:_____ Date:_____

5.8.3.9. Perform a Performance Verification Test (PVT) under Government supervision prior to system acceptance. During the PVT, demonstrate that the system performs as specified, including but not limited to demonstrating that the system is Open and correctly performs the Sequences of Operation.

5.8.3.10. Provide a 1 year unconditional warranty on the installed system and on all service call work. The warranty shall include labor and material necessary to restore the equipment involved in the initial service call to a fully operable condition.

5.8.3.11. Provide training at the project site on the installed building system . Upon completion of this training each student, using appropriate documentation, should be able to start the system, operate the system, recover the system after a failure, perform routine maintenance and describe the specific hardware, architecture and operation of the system.

5.8.4. TESTING, ADJUSTING AND BALANCING. Test and balance air and hydronic systems, using a firm certified for testing and balancing by the Associated Air Balance Council (AABC), National Environmental Balancing Bureau (NEBB), or the Testing Adjusting, and Balancing Bureau (TABB). The prime contractor shall hire the TAB firm directly, not through a subcontractor. Perform TAB in accordance with the requirements of the standard under which the TAB Firm's qualifications are approved, i.e., AABC MN-1, NEBB TABES, or SMACNA HVACTAB unless otherwise specified herein. All recommendations and suggested practices contained in the TAB Standard shall be considered mandatory. Use the provisions of the TAB Standard, including checklists, report forms, etc., as nearly as practicable to satisfy the Contract requirements. Use the TAB Standard for all aspects of TAB, including qualifications for the TAB Firm and Specialist and calibration of TAB instruments. Where the instrument manufacturer calibration recommendations are more stringent than those listed in the TAB Standard, adhere to the manufacturer's recommendations. All quality assurance provisions of the TAB Standard such as performance guarantees shall be part of this contract. For systems or system components not covered in the TAB Standard, the TAB Specialist shall develop TAB procedures. Where new procedures, requirements, etc., applicable to the Contract requirements have been published or adopted by the body responsible for the TAB Standard used (AABC, NEBB, or TABB), the requirements and recommendations contained in these procedures and requirements are mandatory.

5.8.5. COMMISSIONING: Commission all HVAC systems and equipment, including controls, and all systems requiring commissioning for LEED Enhanced commissioning, in accordance with ASHRAE Guideline 1.1, ASHRAE Guideline 0 and LEED. Do not use the sampling techniques discussed in ASHRAE Guideline 1.1 and in ASHRAE Guideline 0. Commission 100% of the HVAC controls and equipment. Hire the Commissioning Authority (CA), certified as a CA by AABC, NEBB, or TABB, as described in Guideline 1.1. The CA will be an independent subcontractor and not an employee of the Contractor nor an employee or subcontractor of any other subcontractor on this project, including the design professionals (i.e., the DOR or their firm(s)). The CA will communicate and report directly to the Government in execution of commissioning activities. The Contracting Officer’s Representative will act as the Owner’s representative in performance of duties spelled out under OWNER in Annex F of ASHRAE Guideline 0. All buildings with Minimum LEED Silver (or better) requirement will earn LEED Credit EA3 Enhanced Commissioning.

5.9. ENERGY CONSERVATION

5.9.1. The building including the building envelope, HVAC systems, service water heating, power, and lighting systems shall meet the Mandatory Provisions and the Prescriptive Path requirements of ASHRAE 90.1. Substantiation requirements are defined in Section 01 33 16, Design After Award.

5.9.2. Design all building systems and elements to meet the minimum requirements of ANSI/ASHRAE/IESNA 90.1. Design the buildings, including the building envelope, HVAC systems, service water heating, power, and lighting systems to achieve an energy consumption that is at least 40% below the consumption of a baseline building meeting the minimum requirements of ANSI/ASHRAE/IESNA Standard 90.1. Energy calculation methodologies and substantiation requirements are defined in Section 01 33 16, Design After Award.

5.9.3. Purchase Energy Star products, except use FEMP designated products where FEMP is applicable to the type product. The term “Energy Star product” means a product that is rated for energy efficiency under an Energy Star program. The term “FEMP designated product” means a product that is designated under the Federal Energy Management Program of the Department of Energy as being among the highest 25 percent of equivalent products for energy efficiency. When selecting integral sized electric motors, choose NEMA PREMIUM type motors that conform to NEMA MG 1, minimum Class F insulation system. Motors with efficiencies lower than the NEMA PREMIUM standard may only be used in unique applications that require a high constant torque speed ratio (e.g., inverter duty or vector duty type motors that conform to NEMA MG 1, Part 30 or Part 31).

5.9.4. Solar Hot Water Heating. Provide at least 30% of the domestic hot water requirements through solar heating methodologies, unless the results of a Life Cycle Cost Analysis (LCCA) developed utilizing the Building Life Cycle Cost Program (BLCC) which demonstrates that the solar hot water system is not life cycle cost effective in comparison with other hot water heating systems. The type of system will be established during the contract or task order competition and award phase, including submission of an LCCA for government evaluation to justify non-selection of solar hot water heating. The LCCA uses a study period of 25 years and the Appendix K utility cost information. The LCCA shall include life cycle cost comparisons to a baseline system to provide domestic hot water without solar components, analyzing at least three different methodologies for providing solar hot water to compare against the baseline system.

5.9.5. Process Water Conservation. When potable water is used to improve a building's energy efficiency, employ lifecycle cost effective water conservation measures, except where precluded by other project requirements.

5.9.6. Renewable Energy Features. The Government's goal is to implement on-site renewable energy generation for Government use when lifecycle cost effective. See Paragraph 6, PROJECT SPECIFIC REQUIREMENTS for renewable energy requirements for this project.

5.10. FIRE PROTECTION

5.10.1. STANDARDS AND CODES Provide the fire protection system conforming to APPLICABLE CRITERIA.

5.10.2. Inspect and test all fire suppression equipment and systems, fire pumps, fire alarm and detection systems and mass notification systems in accordance with the applicable NFPA standards. The fire protection engineer of record shall witness final tests. The fire protection engineer of record shall certify that the equipment and systems are fully operational and meet the contract requirements. Two weeks prior to each final test, the contractor shall notify, in writing, the installation fire department and the installation public work representative of the test and invite them to witness the test.

5.10.3. Fire Extinguisher Cabinets: Provide fire extinguisher cabinets and locations for hanging portable fire extinguishers in accordance with NFPA 10 Standard for Portable Fire Extinguishers.

5.10.4. Fire alarm and detection system: Required fire alarm and detection systems shall be the addressable type. Fire alarm initiating devices, such as smoke detectors, heat detectors and manual pull stations shall be addressable. When the system is in alarm condition, the system shall annunciate the type and location of each alarm initiating device. Sprinkler water flow alarms shall be zoned by building and by floor. Supervisory alarm initiating devices, such as valve supervisory switches, fire pump running alarm, low-air pressure on dry sprinkler system, etc. shall be zoned by type and by room location.

5.10.5. Fire Protection Engineer Qualifications: In accordance with UFC 3-600-01, FIRE PROTECTION ENGINEERING FOR FACILITIES**,** the fire protection engineer of record shall be a registered professional engineer (P.E.) who has passed the fire protection engineering written examination administered by the National Council of Examiners for Engineering and Surveys (NCEES), or a registered P.E. in a related engineering discipline with a minimum of 5 years experience, dedicated to fire protection engineering that can be verified with documentation.

5.11. SUSTAINABLE DESIGN

5.11.1. STANDARDS AND CODES: Sustainable design shall conform to APPLICABLE CRITERIA. See paragraph 6, PROJECT-SPECIFIC REQUIREMENTS for which version of LEED applies to this project. The LEED-NC Application Guide for Multiple Buildings and On-Campus Building Projects (AGMBC) applies to all projects. Averaging may be used for LEED compliance as permitted by the AGMBC but is restricted to only those buildings included in this project. Each building must individually comply with the requirements of paragraphs ENERGY CONSERVATION and BUILDING WATER USE REDUCTION.

5.11.2. LEED RATING, REGISTRATION, VALIDATION AND CERTIFICATION: See Paragraph PROJECT-SPECIFIC REQUIREMENTS for project minimum LEED rating/achievement level, for facilities that are exempt from the minimum LEED rating, for LEED registration and LEED certification requirements and for other project-specific information and requirements.

5.11.2.1. Innovation and Design Credits. LEED Innovation and Design (ID) credits are acceptable only if they are supported by formal written approval by GBCI (either published in USGBC Innovation and Design Credit Catalog or accompanied by a formal ruling from GBCI). LEED ID credits that require any Owner actions or commitments are acceptable only when Owner commitment is indicated in paragraph PROJECT-SPECIFIC REQUIREMENTS or Appendix LEED Project Credit Guidance

5.11.3. OPTIMIZE ENERGY PERFORMANCE. : Project must earn, as a minimum, the points associated with compliance with paragraph ENERGY CONSERVATION. LEED documentation differs from documentation requirements for paragraph ENERGY CONSERVATION and both must be provided. For LEED-NC v2.2 projects you may substitute ASHRAE 90.1 2007 Appendix G in its entirety for ASHRAE 90.1 2004 in accordance with USGBC Credit Interpretation Ruling dated 4/23/2008.

5.11.4. COMMISSIONING. See paragraph 5.8.5 COMMISSIONING for commissioning requirements. USACE templates for the required Basis of Design document and Commissioning Plan documents are available at http://en.sas.usace.army.mil (click on Engineering Criteria) and may be used at Contractor's option.

5.11.5. DAYLIGHTING. Except where precluded by other project requirements, do the following in at least 75 percent of all spaces occupied for critical visual tasks: achieve a 2 percent glazing factor (calculated in accordance with LEED credit EQ8.1) OR earn LEED Daylighting credit, provide appropriate glare control and provide either automatic dimming controls or occupant-accessible manual lighting controls.

5.11.6. LOW-EMITTING MATERIALS. Except where precluded by other project requirements, use materials with low pollutant emissions, including but not limited to composite wood products, adhesives, sealants, interior paints and finishes, carpet systems and furnishings,

5.11.7. CONSTRUCTION INDOOR AIR QUALITY MANAGEMENT. Except where precluded by other project requirements, earn LEED credit EQ 3.1 Construction IAQ Management Plan, During Construction and credit EQ 3.2 Construction IAQ Management Plan, Before Occupancy.

5.11.8. RECYCLED CONTENT. In addition to complying with section RECYCLED/RECOVERED MATERIALS, earn LEED credit MR4.1, Recycled Content, 10 percent except where precluded by other project requirements.

5.11.9. BIOBASED AND ENVIRONMENTALLY PREFERABLE PRODUCTS. Except where precluded by other project requirements, use materials with biobased content, materials with rapidly renewable content, FSC certified wood products and products that have a lesser or reduced effect on human health and the environment over their lifecycle to the maximum extent practicable.

5.11.10. FEDERAL BIOBASED PRODUCTS PREFERRED PROCUREMENT PROGRAM (FB4P). The Farm Security and Rural Investment Act (FSRIA) of 2002 required the U.S. Department of Agriculture (USDA) to create procurement preferences for biobased products that are applicable to all federal procurement (to designate products for biobased content). For all designated products that are used in this project, meet USDA biobased content rules for them except use of a designated product with USDA biobased content is not required if the biobased product (a) is not available within a reasonable time, (b) fails to meet performance standard or (c) is available only at an unreasonable price. For biobased content product designations, see http://www.biopreferred.gov/ProposedAndFinalItemDesignations.aspx.

5.12. CONSTRUCTION AND DEMOLITION (C&D) WASTE MANAGEMENT: Achievement of 50% diversion, by weight, of all non-hazardous C&D waste debris is required. Reuse of excess soils, recycling of vegetation, alternative daily cover, and wood to energy are not considered diversion in this context, however the Contractor must tracked and report it. A waste management plan and waste diversion reports are required, as detailed in Section 01 57 20.00 10, ENVIRONMENTAL PROTECTION.

5.13. SECURITY (ANTI-TERRORISM STANDARDS): Unless otherwise specified in Project Specific Requirements, only the minimum protective measures as specified by the current Department of Defense Minimum Antiterrorism Standards for Buildings, UFC 4-010-01, are required for this project. The element of those standards that has the most significant impact on project planning is providing protection against explosives effects. That protection can either be achieved using conventional construction (including specific window requirements) in conjunction with establishing relatively large standoff distances to parking, roadways, and installation perimeters or through building hardening, which will allow lesser standoff distances. Even with the latter, the minimum standoff

distances cannot be encroached upon. These setbacks will establish the maximum buildable area. All standards in Appendix B of UFC 4-010-01 must be followed and as many of the recommendations in Appendix C that can reasonably be accommodated should be included. The facility requirements listed in these specifications assume that the minimum standoff distances can be met, permitting conventional construction. Lesser standoff distances (with specific minimums) are not desired, however can be provided, but will require structural hardening for the building. See Project Specific Requirements for project specific siting constraints. The following list highlights the major points but the detailed requirements as presented in Appendix B of UFC 4-010-01 must be followed.

(a) Standoff distance from roads, parking and installation perimeter; and/or structural blast mitigation

(b) Blast resistant windows and skylights, including glazing, frames, anchors, and supports

(c) Progressive collapse resistance for all facilities 3 stories or higher

(d) Mass notification system (shall also conform to UFC 4-021-01, Mass Notification Systems)

(e) For facilities with mailrooms (see paragraph 3 for applicability) – mailrooms have separate HVAC systems and are sealed from rest of building

6.0 PROJECT SPECIFIC REQUIREMENTS

6.1. GENERAL

The requirements of this paragraph augment the requirements indicated in Paragraphs 3 through 5.

6.2. APPROVED DEVIATIONS

The following are approved deviations from the requirements stated in Paragraphs 3 through 5 that only apply to this project.

None.

6.3. SITE PLANNING AND DESIGN

6.3.1. General:

The Contractor shall be responsible for the site planning, design, and construction of all functional and technical supporting facilities requirements including: handicap accessible sidewalks, sidewalks, grassing, erosion control measures, mechanical equipment, electrical equipment, equipment pads, storm drainage, pavement, underground conduit, piping, utility service lines, etc.

*2

The site features included in this project includes a building balcony/walkway system and associated sidewalks, traffic-rated sidewalks, dumpster pad, and dumpster access pavement. ~~As part of Bid Option 1, a common dumpster area shall be constructed behind the Lawn Maintenance Building. Associated work shall include a road, curb and gutter, sidewalk, bollards, and drainage. Omit single dumpster near barracks if Option 1 is awarded~~.

Re-grade site around Barracks to ensure positive drainage away from the facility. This will include removal of the existing trees.

Concrete or asphalt removed shall be saw cut.

6.3.2. Site Structures and Amenities

Dumpster Screening shall match or compliment the surrounding facilities and current dumpster systems in the area. Locate dumpster pad is as shown on the site plan. Locate dumpster pads and screening in accordance with setbacks in UFC 4-010-01. Provide one dumpster capacity pad with screening.

6.3.3. Site Functional Requirements:

6.3.3.1. Stormwater Management (SWM) Systems.

A storm water Pollution Prevention Plan (Best Management Plan) shall be designed and included in the design submittals. The approved plan shall be onsite at all times for inspection by EPA, Georgia Department Natural Resources (Georgia DNR), and Fort Gordon environmental personnel.

6.3.3.2. Erosion and Sediment Control

The Contractor shall provide an Erosion Control Package, approved by the Georgia Soil and Water Conservation Commission prior to construction. Any violation to such permits will result in the immediate shutdown of work until corrective measures have been taken at the Contractor's expense. The Contractor shall implement any additional erosion and sediment control measures necessary to retain sediment within the boundaries of the project sites

during all phases of construction. The Contactor shall ensure at least one GSWCC certified individual is available on-site during land disturbing activities (LDA). In the event that the GSWCC certified individual leaves the site and is the only individual on-site that is certified, then all LDA should stop until the certified individual returns.

6.3.3.2.1 Notice of Intent (NOI) Document

The Contractor shall prepare, sign, and submit the Notice of Intent (NOI). The Contractor

shall pay all land disturbance fees associated with this project at no additional expense to the

Government.

6.3.3.2.2 Notice of Termination (NOT) Document

The Contractor shall prepare, sign, and submit the Notice of Termination (NOT).

6.3.3.2.3 Waters of the U.S. and State Waters

Waters of the U.S. and state waters will not be encountered for this project.

6.3.3.3. Vehicular Circulation.

No additional requirements.

6.4. SITE ENGINEERING

6.4.1. Existing Topographical Conditions

The Contractor shall provide a topographical survey of the Site. The survey shall comply with:

Horizontal datum NAD 83

Vertical datum NAVD 88

The survey area shall be of sufficient area to include the construction utilities.

6.4.2. Existing Geotechnical conditions: See Appendix A for a preliminary geotechnical report.

No additional requirements.

6.4.3. Fire Flow Tests See Appendix D for results of fire flow tests to use for basis of design for fire flow and domestic water supply requirements.

No additional requirements.

6.4.4. Pavement Engineering and Traffic Estimates:

Sidewalk shall be composed of 3000 PSI concrete and be a minimum of 4 inches thick. Sidewalk joint spacing shall equal the width of walk except for sidewalks exceeding 8 foot in width, where a longitudinal joint in the center is required.

The traffic rated sidewalk, dumpster pad, and pavement leading to the dumpster pad shall be composed of 5000 PSI concrete and be a minimum of 8 inches thick with 6 inches of aggregate base. The pavement joint spacing shall not exceed 15 foot in width. The length to width ratio shall not exceed 1.25%.

6.4.5. Traffic Signage and Pavement Markings

All traffic signs shall be in accordance with the Manual on Uniform Traffic Control Devices.

6.4.6. Base Utility Information

Based on the Contractor's design and the location of the existing utilities as determined by the topographical survey, the Contractor may have to modify, upgrade, replace, or relocate existing utilities to provide for a complete and usable facility. All utilities shall be relocated out from the footings of the proposed canopy and stairwells. The Contractor shall coordinate with and procure the services of the various Privatized Utility Companies. The Contractor shall be responsible for the costs and fees associated with modifications, upgrades, replacement/additions, or relocations of utility system components as required by the Privatized Utility Companies to provide a complete and usable facility.

6.4.6.1 Central Energy Plant (CEP)

The Contractor is responsible for coordinating CEP information and design features (i.e. location, orientation, etc.) with the base. Per base DPW, the CEP has sufficient capacity for this project. Coordinate with base for all utility shutdowns. The CEP point of contact for the base is Glenn Stubblefield glenn.stubblefield@us.army.mil. The hot water is only available in the winter months. For design purposes the hot water is between 250-300 degrees F at 100-200 psig supply and return water is at 60 psig and 230 degrees F. For design purposes, the chilled water supply from the central energy plant is 42 deg F and 121 psi, and the chilled water return to the central energy plant is 54 deg F and 45 psi. The chilled water and hot water distribution drawings issued with this RFP are For Information Only and do not show exact locations of the existing chilled water and hot water distribution. The Contractor shall field verify the chilled water and hot water distribution locations.

6.4.6.2 Electric Power Service

Primary power and site lighting is owned by Georgia Power Company. The Contractor shall procure the services of Georgia Power Company to design, furnish and install all site power systems and to replace and/or relocate site power and lighting lines as necessary. No work shall be done by Georgia Power Company outside this contract. The point of contact at Georgia Power Company is Mr. Mark Mills, (706) 667-5633, Mobile (706) 564-5553.

6.4.6.3 Water And Sewer Services

The water and sewer services on this installation are privatized. The Contractor shall design, construct on site water and sewer systems, and tie-in to the off-site water and sewer systems. The new on-site systems shall be in accordance the Augusta Utilities Department, Water and Sewer Systems-Guidelines (see Appendix CC). Tie-in to the off-site systems shall be coordinated with

Augusta Utility System Company
POC: Mr. Horace Luke
Mobile: (706) 691-6484
E-mail: HLuke@augustaga.gov

6.4.6.5 Natural Gas Service

The Contractor is responsible for coordinating gas utility information and design features (i.e. location, size, orientation, etc.) with private utility contractor Atlanta Gas and Light. Natural Gas is available at this building and the gas main is located on the west side of the building across 29th Street. Atlanta Gas and Light, point of contact is Mr. Carl Corley Mobile (706) 214-0858, Email icorley@aglresources.com.

The Contractor shall procure the services of Atlanta Gas and Light to furnish and install all site gas piping systems and to replace and/or relocate site gas pipes or gas meters as required to complete this project. No work shall be done by Atlanta Gas and Light outside this contract.

The contractor shall be responsible for the installation of Natural Gas piping from all equipment within Building 29703 to the gas meter on the exterior of the building.

6.4.6.6 Storm Drainage System
*2
All storm drainage structures and pipe leading from the site shall be cleaned of sediment and debris and shall be flushed. Roof drains are to be provided from the building down spouts to the existing storm drain system for the Barracks building.

6.4.6.7 Utility Coordination

Prior to the start of construction, the Contractor shall perform a utility coordination meeting with the Contracting Officer and the privatized utility companies. The Contractor shall use the coordination meeting to identify all utility lines impacted by project construction and verify working status of the existing lines. Utility impacts to be coordinated shall include, but not be limited to, connections, removals, temporary service then removal, and permanent relocations.

6.4.7. Cut and Fill

All earth cut and fill slopes shall not be steeper than 4 horizontal to 1 vertical.

6.4.8. Borrow Material

Contractor shall obtain all borrow material from an off-base source and dispose of all waste material and debris off-base.

6.4.9. Haul Routes and Staging Areas

See location plan for haul routes.

6.4.10. Clearing and Grubbing:

6.4.11. Landscaping:

Landscaping (except for grassing) will be part of a future project and is not included in this contract.

6.4.12. Turf:

Common Bermuda Sod shall be provided on all finished disturbed earth area. Temporary seeding shall be provided as necessary to meet the erosion and sediment requirements.

6.5. ARCHITECTURE

6.5.1. General: To the maximum extent possible within the contract cost limitation, the buildings shall conform to the look and feel of the architectural style and shall use the same colors as adjacent facilities as expressed herein . The Government will evaluate the extent to which the proposal is compatible with the architectural theme

expressed in the RFP during the contract or task order competition. The first priority in order of importance is that the design provides comparable building mass, size, height, and configuration compared to the architectural theme expressed herein. The second priority is that design is providing compatible exterior skin appearance based upon façade, architectural character (period or style), exterior detailing, matching nearby and installation material/color pallets, as described herein.

6.5.2. **Design**

6.5.2.1. Appendix F is provided "For Information Only", to establish the desired site and architectural themes for the area. Appendix F identifies the desired project look and feel based on Fort Gordon**'s** Installation Architectural Theme from existing and proposed adjacent building forms; i.e. building exterior skin, roof lines, delineation of entrances, proportions of fenestration in relation to elevations, shade and shadow effects, materials, textures, exterior color schemes, and organizational layout.

6.5.2.2. The design should address Fort Gordon's identified preferences. Implement these preferences considering the following:

(a) Achievable within the Construction Contract Cost Limitation (CCL)

(b) Meets Milestones within Maximum Performance Duration.

(c) Achieves Full Scope indentified in this Solicitation

(d) Best Life-Cycle Cost Design

(e) Meets the Specified Sustainable Design and LEED requirements

(f) Complies with Energy Conservation Requirements Specified in this RFP.

6.5.2.3. Priority #1. Visual Compatibility: Facility Massing (Size, Height, Spacing, Architectural Theme, etc.) Exterior Aesthetic Considerations: The buildings massing, exterior functional aesthetics, and character shall create a comprehensive and harmonious blend of design features that are sympathetic to the style and context of the Installation. The Installation's intent for this area is:

for Bldg 29703 to be visually compatible with the surrounding renovated "rolling pin" barracks.

6.5.2.4. Priority #2. Architectural Compatibility: Exterior Design Elements (Materials, Style, Construction Details, etc.) Roofs, Exterior Skin, and Windows & Door Fenestrations should promote a visually appealing compatibility with the desired character while not sacrificing the integrity and technical competency of building systems.

6.5.2.5. See Appendix F for exterior colors that apply to Architectural character at Fort Gordon. The manufacturers and materials referenced are intended to establish color only, and are not intended to limit manufacturers and material selections.

6.5.2.6. Additional architectural requirements:

(a) Install fall protection anchor points on all roofs with a slope greater than 2:12

(b) Exterior walls

Exterior exit stairs are to be cast in place concrete. Exterior supporting walls for the stairs are to be brick masonry. Stairs are to be covered with a roof assembly which matches the building's roof.

(c) Interior Walls

*2

Interior walls dividing bedrooms are to be 8" concrete masonry or impact resistant gypsum board on metal stud framing with sound attenuation batt insulation. Fire ratings shall be as required by applicable criteria. Walls around the perimeter of laundry rooms, mechanical rooms, stairs, electrical rooms, and mechanical corridors are to be minimum 8" concrete masonry. Existing masonry/brick walls at the perimeter of these rooms will satisfy the requriements of this paragraph when all other provisions of this RFP are met.

(d) Ceilings

Suspended 5/8” gypsum board

(e) Roof

Provide a new structural standing seam metal roof system with concealed clips, with a minimum 6/12 slope in the base standard red color in compliance with the Installation Design Guide. Steel panels are to be aluminum-zinc alloy coated steel conforming to ASTM A 792 / A 792 M, AZ 55. Roof shall have a minimum 24” fascia and a minimum 24” overhang. Color finishes shall be standard 70 percent polyvinyldene floride (Kynar 500) color finish. Wind loading design shall be in accordance with ASCE 7 latest edition.

Roof system shall include complete roof drainage system. Gutters and downspouts shall match the structural standing seam roof. The soffit covering the exterior walkways shall be the same material as the roofing (vented).

***3**

A ~~Contractor’s~~ manufacturer's Weathertightness Warranty shall be provided. The SSSMR system shall be warranted by the ~~Contractor~~ manufacturer on a no penal sum basis for a period of 25 (twenty-five) years against material and workmanship deficiencies; system deterioration caused by exposure to the elements and/or inadequate resistance to specified service design loads, water leaks, and wind uplift damage. The SSSMR system covered under this warranty shall include the entire roofing system including, but not limited to, the standing seam metal roof panels, fasteners, connectors, roof components, and assemblies tested and approved in accordance with ASTM E 1592. In addition, the system shall consist of panel finishes, slip sheet, insulation, vapor retarder, all accessories, components, and trim and all connections with roof panels. This includes roof penetration items such as vents, curbs, and skylights; interior or exterior gutters and items such as downspouts; eaves, ridge, hip, valley, rake, gable, wall, or other roof system flashings installed and any other components specified within this contract to provide a weather tight roof system; and items specified in other sections of these specifications that are part of the SSSMR system. All material and workmanship deficiencies, system deterioration caused by exposure to the elements and /or inadequate resistance to specified design loads, water leaks and wind uplift damage shall be repaired as approved by the Contracting Officer. This warranty shall warrant and cover the entire cost of repair or replacement, including all material, labor, and related markups. ~~The Contractor shall supplement this warranty with written warranties from the installer and system manufacturer, which shall be submitted along with Contractor’s warranty; however, the Contractor shall be ultimately responsible for this warranty.~~

Manufacturer’s Material Warranties shall be provided. The Contractor shall furnish, in writing, the following manufacturer’s material warranties which cover all SSSMR system components such as roof panels, anchor clips and fasteners, flashing, accessories, and trim, fabricated from coil material:

***3**

a. A manufacturer’s ~~20 year~~ 25-year material warranty warranting that the aluminum-zinc alloy coated steel as specified herein will not rupture, structurally fail, fracture, deteriorate, or become perforated under normal design atmospheric conditions and service design loads. Liability under this warranty shall be limited exclusively to the cost of either repairing or replacing nonconforming, ruptured, perforated, or structurally failed coil material.

***3**

b. A manufacturer’s ~~20 year~~ 25-year exterior material finish warranty on the factory colored finish warranting that the finish, under normal atmospheric conditions at the site, will not crack, peel, or delaminate; chalk in excess of a numerical rating of eight, as determined by ASTM D 2214 test procedures; or change color in excess of five CIE or Hunter Lab color difference (delta E) units in accordance with ASTM D 2244. Liability under this warranty is exclusively limited to refinishing with an air-drying version of the specified finish or replacing the defective coated material.

***3**

~~c. A roofing system manufacturer’s 20 year, non-prorated, system weather tightness warranty.~~

(f) Doors

Exterior steel doors shall be Extra Heavy Duty, Level 3 physical performance, Level A, Model 2 (seamless), insulated, galvanized metal with factory prime and field painted finish. Frames are to be steel, welded construction, Level 3. Entrance doors at Laundry, Dayroom and Computer Learning Center shall have vision panels. Utility doors shall be flush and louvered as necessary. Exterior and interior door hardware shall be Grade 1 with interchangeable lock cores. Door locks and keying shall be compatible with the base standard system. Bedroom doors are to have combination locksets or card reading devices.

(g) Windows

Provide new energy efficient and ATFP compliant exterior aluminum sliding windows. Frames are to be thermally broken and are to be mounted in steel frames adjacent to the door. At some locations, aluminum windows will stand alone. Insulated panels should be used to fill-in frames below windows and above doors. Glazing shall be one-inch insulated composed of 1/4" tempered and 1/4" laminated glazing. Color of glazing and frames shall comply with the Installation Design Guide.

Glazing shall be provided with low E coating. Glazing shall maximize light transmission and minimize solar heat gain. Glazing shall comply with ASHRAE 90.1 as modified by EPACT 2005. Frames shall be anodized aluminum.

(h) Exterior Finishes

Provide exterior finishes in compliance with the Fort Gordon Installation Design Guide (IDG). The intent of this project is to improve the exterior appearance of this facility and bring it into compliance with the IDG. Acceptable materials include brick, metal panels, EIFS, split-faced block and cast stone. The IDG includes desired color scheme. Exposed structural elements are not an acceptable design solution. Galvanized steel is not an acceptable exposed finish.

(i) Exterior Miscellaneous Metals

The exterior guardrails and handrails are to be powder-coated steel. Guardrail sections shall be removable at each end of the building on each floor. Ground level security grilles shall be powder coated steel and match the design of those on Building 29715.

6.5.3. Programmable Electronic Key Card Access Systems:

Not required.

6.5.4. INTERIOR DESIGN

MOCK-UP BARRACKS ROOM

Provide a consolidated display board, (instead of individual and loose submittals) and a scale model mock-up of a typical barracks room and bathroom to illustrate sample wall and floor coating systems. The mock-up shall utilize specified finishes in the proposers design patterns and colors as indicated in BUILDING COLOR AND FINISH SCHEDULE. Color samples from the manufacturer's standard line (or custom color samples if specified) to be used in selecting or approving colors for the project. The mock-up shall show physical examples of materials, equipment or workmanship that illustrate functional and aesthetic characteristics of a material and establish standards by which the work can be judged.

The Contractor has the option to create on on-site renovated room as the mock-up showing example finish materials. Rejected units shall be removed from the jobsite. Approved mock-up may remain as part of the finished work.

Interior building signage requirements:

No additional requirements.

6.6. STRUCTURAL DESIGN

6.6.1 General.

a) An initial site inspection by the Contractor is required in-order to identify whether the existing structural system contains defects, or shows signs of deterioration. The contractor shall be responsible for locating and repairing any deficiencies.

b) The standoff distance required by Force Protection criteria from the edge of the building shall be checked. Currently, certain site constraints may prevent these distances from being met.

c) Any new penetrations into the existing barracks walls, floors, roofs, or foundation is not allowed, unless accompanied by an analysis that has proven each new penetration does not degrade the structural integrity of the building. Whenever possible existing penetrations should be used to route new utilities.

6.6.2 Seismic

Incorporate seismic upgrades into the existing building so that it meets current seismic code. In the seismic analysis check and correct the following parameters which are elaborated on in chanpter 2 of FEMA 547.

.

a) Global stiffness

b) Configuration

c) Load path

d) Component detailing

e) Diaphragms

f) Foundations

6.6.3 Progressive Collapse

Existing framing and its new features shall be adapted to meet progressive collapse requirements.

6.6.4 Roof

The existing built-up roof shall be replaced with a new standing seam roof. The new standing seam roof shall be supported by light gage metal framing.

6.6.5 Balconies

Provide new balconies along the exterior periphery of the 2nd and 3rd floors. These balcony structures shall not receive vertical or lateral support from the existing buildings. The balcony slab shall be sloped to drain water away from the sides of the building. Provide adequate dummy joints in the lateral direction of the balcony slabs to prevent shrinkage cracks. The structural design for the balcony slab shall be coordinated with architectural, mechanical, and electrical features when they are embedded or mounted in the underside of the slab.

6.6.6 Design Loads

Dead Loads: Actual weights of materials used in construction.

Live Loads: For new renovated areas, refer current IBC.

Balconies: 100 psf

Wind Load: Refer UFC 3-301-01

Seismic Load: Refer UFC 3-301-01

6.7. THERMAL PERFORMANCE

Building construction will be per criteria listed under section 4.0 “Applicable Criteria”. The facility envelope is to comply with the requirements of ASHRAE 90.1 1 as modified by EPACT 2005.

6.8. PLUMBING

a. All sanitary waste piping, vent piping, gas piping, domestic water piping, storage tanks and fixtures with-in the building shall be demolished.

b. New waste piping, vent piping, and domestic hot and cold water piping systems shall be provided to facilitate new plumbing fixture lay-out.

c. New plumbing fixtures shall be installed in restrooms and common areas.

d. A new gas water heater and tank system shall be provided for the building with a water recirculation pump and loop.

e. Where backflow prevention assemblies are required to be installed on the domestic water and fire water piping, installation shall conform to Augusta Utility Department guidelines and specifications (Appendix CC).

6.9. SITE ELECTRICAL AND TELECOMMUNICATIONS SYSTEMS

The complete existing electrical system including building power, lighting, communication and signal systems shall be demolished and replaced with new systems. Service entrance equipment, ducts and conductors shall be included in the electrical replacement. Site lighting and other site loads beyond the building 5-foot line shall be excluded from the electrical replacement, except site circuits originating in the building shall be reconnected to new panelboards. See Appendix C: UTILITY CONNECTIONS for additional requirements.

6.9.1 Service Requirements

The Contractor is responsible for all site electrical and communication work required to serve the renovated building, including relocation and replacement of the utility transformer serving buildings 29702 and 29703. The new transformer shall be located east of building 29703 in the vicinity of the dumpster, shall be no closer than 25 feet to any buildings, and shall comply with UFC 3-600-01 and the privatized +utility requirements. Transformer location shall be coordinated with and approved by the Fort Gordon Directorate of Public Works (DPW) through the Contracting Officer. New service conductors and conduit shall be provided between buildings 29702 and 29703 and the new transformer. Temporary service shall be provided to building 29702; no outages shall be allowed to building 29702. The Contractor is also responsible for the relocation and/or replacement of all existing electrical lines that interfere with the renovation. The Contractor shall procure the services of Georgia Power Company to design, furnish and install all site power systems and to replace and/or relocate site power and lighting lines as necessary. No work shall be done by Georgia Power Company outside this contract.

6.9.2 Meters

Provide a new electrical meter at facility service entrance on exterior of facility. Electric meters shall provide demand readings based on consumption over a maximum of any 15 minute period. Configure all meters to transmit at least daily even if no receiver for the data is currently available at the time of project acceptance. The privatization utility shall furnish two CT cabinets and meter base for installation by the Contractor on a CFCI rack. The Contractor shall also provide three 3-inch PVC conduits 30-inches below grade, extending from the base of the CT cabinet. The Contractor shall coordinate with and pay the privatization utility for the utility-furnished equipment and the meter installation and connections.

6.9.3 Site Communications Systems

The design of the communication systems shall be coordinated with the Fort Gordon Network Enterprise Center (NEC).

Provide new 2-way, 4-inch concrete-encased ductbank from the main communication room to existing maintenance hole MH-5D, with one quad innerduct (Maxcell Fiber Flow innerduct, or approved equal) in each duct. Provide 100 pair copper cable and 12 strand single mode fiber from the main communication room to the existing NEC Communication Facility via maintenance hole MH-5D. Coordinate cable assignments, splices and patching with Fort Gordon NEC.

The building entrance outside plant cable shall include a cable between the entrance and 110 block, mounted on the backboard. Terminate the 100 pair copper in the main communications room and the NEC Communication Facility with building entrance protected terminals with solid state modules.

Terminate the 12 strand single mode fiber with SC connectors in a rack mounted patch panel in the main communications room and the NEC Communication Facility.

See Plates CS-101 and VF-105 for the NEC Communication Facility and maintenance hole MH-5D locations.

Provide new 1-way, 4-inch empty conduit from the CATV backboard in the mechanical room to a location 5-feet beyond the building foundation. Coordinate outside termination point with CATV provider.

Empty conduit and ducts shall include pull wire and shall be sealed, capped, tagged and marked at each end.

6.10. FACILITY ELECTRICAL AND TELECOMMUNICATIONS SYSTEMS

The complete existing electrical system including building power, lighting, communication and signal systems shall be demolished and replaced with new systems. Service entrance equipment, ducts and conductors shall be included in the electrical replacement. Site lighting and other site loads beyond the building 5-foot line shall be excluded from the electrical replacement, except site circuits originating in the building shall be reconnected to new panelboards.

6.10.1 Interior Wiring

All existing wiring shall be removed and all new wiring shall be installed in conduit. All existing exposed conduit including conduit above ceilings shall be removed. Existing conduit concealed in walls or floors may be abandoned in place. Raceways in walls and above suspended ceilings will be conventional wiring in EMT. Conduit may be exposed in unfinished spaces such as mechanical rooms and electrical rooms. All other conduit shall be concealed. Minimum size conductor shall be 12 AWG.

6.10.2 Grounding

Ground resistance for existing ground system shall be measured and a report provided to the Contracting Officer. Contractor shall provide additional ground rods if resistance is greater than 5 ohms. Green grounding conductor shall be provided with each feeder, and branch circuits, size as per NEC.

A ground bar shall be provided in each electrical and each voice/data communications backboard (each backboard wall). Ground bars shall be a ¼ inch x4-inch x 18-inch copper bus bar with 4 inch standoff insulators. Bars shall be provided with pre-drilled holes in accordance with NEMA standards for attachment of bolted compression fittings.

6.10.3 Power Requirements

Provide new power, lighting, communication and signaling systems as required. Obtain fault current availability from the privatized utility, Georgia Power Company. Provide a minimum of 20% spare capacity throughout the interior electrical distribution system and a minimum of four spare breakers in each panelboard. Breaker panels shall be lockable and all breaker panels in each building shall be keyed to one master key for maintenance personnel access only. All receptacles and light switches to be 20 ampere minimum. Surface raceway shall be used only in unfinished spaces. Power poles shall not be used.

Provide a minimum of two receptacle branch circuits per living quarters. In bedrooms provide a minimum of one outlet on each side of beds, and two at desk side of room. Provide minimal lighting and receptacles in attic space. Provide receptacles in corridors for floor maintenance. Provide quadraplex receptacles for at least 14 computer workstations in each Learning Center. Provide a minimum of one duplex receptacle per wall and one quadraplex receptacle at each desk in all offices. Provide a receptacle adjacent to each CATV outlet and each communications jack. A minimum of one duplex receptacle shall be provided on each wall in each mechanical room, electrical room, communications room and laundry room. In addition, one dedicated circuit NEMA 5-20R duplex receptacle, one dedicated circuit NEMA 5-20R quadraplex receptacle and one dedicated circuit L5-30P receptacle shall be provided in each communications room. Interior power shall be provided for all installed equipment requiring power including washers, dryers, vending machines and government furnished government installed equipment.

Transient voltage surge suppression equipment shall be provided for the new service entrance and downstream panelboards serving electronic equipment.

6.10.4 Lighting

Lighting will comply with the recommendations of the Illumination Engineering Society of North America (IESNA).

6.10.4.1 Interior Lighting

Demolish all existing lighting branch circuits, lighting fixtures, boxes and switches. Install new energy efficient solid-state and/or fluorescent fixtures throughout. All common area and living quarters (bath and bedroom) light fixtures shall be vandal-resistant and tamper-proof and shall be recessed (where practical). Provide energy efficient fluorescent strip fixtures in attic and storage spaces and mechanical rooms. Lighting level in mechanical and electrical rooms shall be 30 foot-candles average maintained. Provide night light circuits in corridors and common areas as necessary.

6.10.4.2 Emergency Lighting

Emergency egress lighting and exit signs shall be provided as required. Emergency battery ballasts shall be provided in light fixtures where emergency lighting is required. Emergency battery ballasts and exit signs shall be self-diagnostic type.

6.10.5 Lightning Protection

Remove existing lightning protection system from roof and provide new lightning protection system on new roof. Down conductors shall be installed in conduit concealed in walls. Design shall be in accordance with NFPA 780 and other referenced criteria. Provide transient voltage surge protection.

6.10.6 Communications Systems

The communication system shall be pre-wired. The design of the communication systems shall be coordinated with the Fort Gordon Network Enterprise Center (NEC).

6.10.6.1 Communications Rooms

Communications rooms shall be provided on each floor, shall be stacked from floor to floor, and shall include two (2) 4-inch sleeves (or equivalent slot) between vertically stacked rooms. Provide one twelve (12) strand single mode fiber and one 100 pair copper cable with terminals between east and west communication rooms on the first floor. Provide one six (6) strand single mode fiber and one 100 pair copper cable with terminals between stacked communication rooms on adjoining floors. The number, size and features of communication rooms shall comply with I3A Technical Criteria

Each telecommunications room shall have an air conditioning duct and register. Doors shall be equipped with a 2M1 lock and shall have a ventilation grate.

Cable tray shall be installed around the entire perimeter of all communications room.

Provide 2 (two) 7’X19” racks mounted to the floor and wall supported with ladder tray. Equipment racks shall be 84 inches in height. Provide distribution to allow for capacity of one pathway from NIPRNET (telecommunications) room to each work space.

Voice and data cabling shall be installed in rack mounted patch panels in communications rooms. Copper cable shall be terminated on 110 blocks, and single mode fiber shall be rack mounted and terminated with SC connectors.

Service riser conduits in the main communications room shall be located behind the equipment room.

Each telecommunications room shall include 1 (one) NEMA 5-20R receptacle, 1 (one) NEMA L5-30P receptacle, and 3 (three) 110/120 VAC quad receptacle.

6.10.6.2 Cable Tray

Cable trays shall be provided in all communication rooms and shall be provided for use as a centralized cable distribution system where space permits. Cable trays shall be solid bottom, except within the communications room, where ladder type trays that drop below the ceiling panels shall be used. Cable trays shall be no higher than 6 inches above finished ceilings. Sufficient working space (approximately 12 inches) shall be provided above the trays.

Cable trays shall be sized to provide no less than one square inch of cross-sectional area per duplex outlet served. Size shall be increased as necessary to accommodate all cables installed. The cable tray fill ration shall be 75 percent where practical.

Voice/Data communications cable tray shall only be used for voice/data communications wiring. Homerun conduit from outlets shall be physically strapped to the cable tray and attached with an anti-chaffing grommet.

6.10.6.3 Voice/Data Communication Outlets

Provide communications drops for each fax, copier, printer, and computer workstation and elsewhere as required by user. Provide connectivity for ceiling mounted projectors in each Learning Center. Equipment shall be GFGI.

Provide 3 (three) voice NIPRNET outlets and 3 (three) data NIPRNET outlets in each bedroom in the barracks core such that each desk has voice and data connectivity.

Provide 5 (five) voice NIPRNET outlets and 5 (five) data NIPRNET outlets in each bedroom in the barracks ends (across the breezeway from the barracks core) such that each desk has voice and data connectivity.

Provide 2 (two) voice NIPRNET and 2 (two) data NIPRNET outlets in each office.

Provide 2 (two) voice NIPRNET outlets in each Learning Center, and provide a minimum of 14 (fourteen) data NIPRNET outlets for computer workstations in each Learning Center.

Provide data connection for interactive white board (i.e., smart board) in each Learning Center. Equipment shall be GFGI.

Provide 1 (one) combination voice/data NIPRNET wall outlet in each mechanical room, electrical room and communications room.

Provide 1 (one) combination voice/data NIPRNET outlet at the front of each partitioned area in each multipurpose space.

Coordinate communication outlets with power receptacle locations and with furniture and equipment layouts.

All voice and data homeruns shall terminate in a communications room.

All copper homeruns shall be Cat 6 or Cat 6E plenum rated cable installed in cable trays or conduits (in non-accessible areas). The total cable length between instrument and backboard terminations shall not exceed 295 feet.

6.10.6.4 Communication Grounding

A ¼ inch x4-inch x 18-inch copper bus ground bar with 4-inch standoff insulators shall be provided in each communications room. Bars shall be provided with pre-drilled holes in accordance with NEMA standards for attachment of bolted compression fittings. Ground bars shall be connected with a #6 AWG green grounding insulated conductor to the building grounding system at the main service panel. Additional ground rods shall be provided as necessary if the ground resistance is greater than 5 ohms.

6.10.6.5 Communication Testing

For single mode optical fiber, optical fiber end to end attenuation tests shall be performed in accordance with EIA TIA/EIA-568-B.3 and EIA TIA/EIA-526-7 using Method A, Optical Power Meter Source. Cable inspection, verification, and performance tests shall be done in accordance with EIA TIA/EIA-568-B-1. Cabling terminations in telecommunications rooms and at workstations shall be inspected to confirm color code for 568B pin assignment, and cabling connections shall be inspected to confirm compliance with EIA TIA/EIA-568B.1. Ground resistance shall be measured to confirm resistance does not exceed 5 ohms. The contractor shall provide copies of the resistivity readings, fiber optics dB loss and copper cable test results for all splicing/terminations errors to the Contracting Officer and the NEC.

6.10.7 Community Antennae Television (CATV)

Provide 2 CATV outlets in each Day Room, each outlet centered on the two widest uninterrupted walls.

Provide 1 CATV outlet in each office.

Provide 2 CATV outlets in each Learning Center.

Coordinate exact CATV outlet locations with the design architect.

6.10.8 Fire Alarm and Detection and Mass Notification Systems

Each building shall be provided with addressable Class A fire alarm and detection and mass notification systems. The systems shall communicate with and be fully compatible with both the basewide Honeywell/Notifier EBI system (located in the DPWL Server Room of Building 14600) and the basewide Monaco D21 system (located in the Law Enforcement Center). See APPENDIX: Fort Gordon FADS & MNS Requirements for additional requirements.

6.10.9 Closed Circuit Television (CCTV)

Provide a complete CCTV system to monitor hallway, exterior doorways and entryways, stairwells, and laundry facilities as indicated in paragraphs 3.1.7 and 3.2.1. Cameras shall be installed in protective enclosures recommended by the camaera manufacturer to minimize vandalism.

6.10.10 Intrusion Detection System (IDS)

Provide a complete IDS as indicated in paragraphs 3.1.7 and 3.2.1..

6.10.11 Attic Space

Provide lighting and receptacles in attic space.

*2

6.10.12 ~~Lawn Maintenance Building~~

~~Provide lighting and receptacles in the lawn maintenance building. Provide exterior wall mounted lighting as necessary for security.~~

6.10.13 Salvageable Materials

The existing fire alarm control panel and transmitter shall be removed by the Contractor and delivered to the base location directed by the Contracting Officer.

6.11. HEATING, VENTILATING, AND AIR CONDITIONING

6.11.1 HVAC Design Criteria

HVAC Design Criteria shall be based upon UFC 3-400-02 “Design: Engineering Weather Data for Augusta, GA.

Ventilation rates for each space shall be in accordance with ASHRAE 62.1 “Ventilation for Acceptable Air Quality”.

Demolish all existing HVAC systems including air handlers, fans, ductwork, chilled water piping, heating hot water piping, pumps, grilles, controls, boilers, air compressors and fan coil units. Existing Dorsett fiber control cabling shall not be demolished until written approval from the Contracting Officer has been obtained.

6.11.2 User Preferred HVAC System

This section is not an all inclusive list, but a general system type that the user prefers to be utilized. All conditions set forth in paragraphs 3, 4, and 5 of this RFP are required to be met if this “user preferred system” is to be designed and installed.

6.11.2.1 Air Handling Equipment

No Fan Coil units are to be utilized in the building.

Dedicated Outside Air Systems shall be provided to pre-treat the outdoor air prior to being introduced into individual rooms/dwelling units. The DOAS shall consist of chilled water coils, re-heat coils, energy recovery wheels, etc. in order to provide dehumidification and temperature control of the ventilation outside air.

Individual Air Handlers shall provide cooling and heating for rooms/dwelling units with-in the building by utilization of VAV terminal units. Air Handlers shall have VFDs in order to vary the airflow of the Air Handlers during reduced demand loads.

Each room/dwelling unit shall be provided with a VAV terminal unit. The VAV terminal unit will have a heating hot water coil to provide individual temperature control of each room/dwelling unit. Thermostats for each VAV terminal unit shall be provided for each room.

Common areas will be conditioned with air handling units with chilled water and heating hot water coils.

6.11.2.2 Water Piping

A four pipe system (chilled water supply/return, heating water supply/return) shall serve the cooling and heating needs of the facility.

Provide new chilled water and heating hot water piping in mechanical room and to all air handling units. Provide heating water to all VAV's. for the integral hot water re-heat coil. All piping will be removed back to the existing building entrance location. New pumps shall be installed to provide necessary pressure in the piping systems. Provide two heating hot water pumps and two chilled water pumps sized at 100% of the load for redundancy in the system. Use base chilled water and heating hot water. The chilled water from the central plant shall be utilized in this system. A boiler shall be installed in a mechanical room to provide heating hot water for the building load during the summer months when the Central Plant Boilers are not operational.

New chilled water or heating water outside distribution required (as determined by the Designer Of Record) shall be installed in a shallow trench.

6.11.3 Ductwork

New sheet-metal ductwork will be installed for the supply and return systems on each air handling unit. Ductwork shall supply air evenly throughout the facility via aluminum supply diffusers and perforated return grilles.

6.11.4 Communications Room

A dedicated heating and cooling unit will be provide for the communications room. This unit will be provided with chilled water and hot water coils.

6.11.5 Restrooms and Closets

Exhaust fans and ductwork shall be provided for each restroom and the janitor's closet.

6.11.6 Laundry

Exhaust duct shall be provided for dryer exhaust.

6.11.7 HVAC

A Direct Digital Control system will be provided for the HVAC equipment. The control system shall be tied into the base Energy Management System.

An emergency HVAC shutdown switch will be provided as required by UFC 4-010-01 DoD Minimum Antiterrorism Standards for Buildings. The switch will de-energize all air handling equipment and close all outside air dampers.

6.11.8 UMCS

Fort Gordon currently maintains a Dorsett Utility Monitoring & Control Systems (UMCS), which is a web-based system. The UMCS is located in building 14600. The Point-of-Contact for UMCS is Controls Engineer Mr. Tim Lynch COM(706-791-4148), DSN (780-4148), david.t.lynch@us.army.mil The buildings shall be integrated into the UMCS. The HVAC Control System in Building 29703 shall be a Direct Digital Control system that is 100% compatible with the Ft. Gordon Utility Monitoring and Control System. The integration shall include the requirements in the RFP. The installation and integration of the building control system shall be by a Contractor authorized by Dorsett. The contractor shall submit authorization documentation for the control system he is proposing. Before starting the design the Contractor shall meet with the operating staff to discuss the Installations requirements for graphics and programming. Existing Dorsett fiber control cabling shall not be demolished until written approval from the Contracting Officer has been obtained.

Integrate the control system to the installation's existing UMCS. The existing UMCS is Dorsett UMCS

6.12. ENERGY CONSERVATION

6.12.1. General

The contractor will purchase Energy Star or FEMP designated products. The term" Energy Star product" means a product that is rated for energy efficiency under an Energy Star program. The term "FEMP designated product" means a product that is designated under the Federal Energy Management Program of the Department of Energy as being among the highest 25 percent of equivalent products for energy efficiency. In the case of an electrical motor of 1 to 500 horsepower the Contractor will select only the premium efficient motor.

Energy calculation methodologies and substantiation requirements are defined in Section 01012, design after Award. Base the selection of solutions and technologies to achieve the above energy performance requirements on life cycle cost analysis. Life Cycle Cost Analyses will follow the requirements set forth in NIST Handbook 135 Life-Cycle Costing Manual using an automated calculation tool such as BLCC or LCCID. Cyclical and annual maintenance costs used will come from ASHRAE recommendations or other similar industry Standard source.

6.12.2. Inclusion of Renewable Energy Features. The following renewable energy features have been determined lifecycle cost effective, are included in the project budget and shall be provided:

None.

6.13. FIRE PROTECTION

Fire protection and life safety features shall be in accordance with UFC 3-600-01 and the criteria referenced therein. Barracks Buildings shall be provided with complete sprinkler protection.

6.13.1 Fire Protection and Life Safety Analysis

A fire protection and life safety design analysis shall be provided for all buildings in the project. The analysis shall be submitted with the interim design submittal. The analysis shall include classification of occupancy (both per the IBC and NFPA 101); type of construction; height and area limitations (include calculations for allowable area increases); life safety provisions (exit travel distances, common path distances, dead end distances, exit unit width required and provided); building separation or exposure protection; specific compliance with NFPA codes and the IBC; requirements for fire-rated walls, doors, fire dampers, etc.; analysis of automatic suppression systems and protected areas; water supplies; smoke control systems; fire alarm system, including connection to the base-wide system; fire detection system; standpipe systems; fire extinguishers; interior finish ratings; and other pertinent fire protection data. The submittal shall include a life safety floor plan for all buildings in the project showing occupant loading, occupancy classifications and construction type, egress travel distances, exit capacities, areas with sprinkler protection, fire extinguisher locations, ratings of fire-resistive assemblies, and other data necessary to exhibit compliance with life safety code requirements.

6.13.2 Sprinkler System

The Barracks Buildings shall be fully protected with automatic sprinkler systems. All floors and all areas of the facilities shall be protected. The sprinkler system design shall be in accordance with UFC 3-600-01, NFPA 13, and, where applicable, NFPA 13R. The sprinkler hazard classifications shall be in accordance with UFC 3-600-01, NFPA 13, and other applicable criteria. Design densities, design areas and exterior hose streams shall be in accordance with UFC 3-600-01. The sprinkler systems shall be designed and all piping sized with computer generated hydraulic calculations. The exterior hose stream demand shall be included in the hydraulic calculations. A complete sprinkler system design, including sprinklers, branch lines, floor mains and risers, shall be shown on the drawings. The sprinkler system plans shall include node and pipe identification used in the hydraulic calculations. All sprinkler system drains, including main drains, test drains, and auxiliary drains, shall be routed to a 2-foot by 2-foot splash block at exterior grade.

6.13.2.1 Sprinkler Service Main and Riser

The sprinkler service main shall be a dedicated line from the distribution main. Sprinkler service and domestic service shall not be combined. The sprinkler service main shall be provided with an exterior post indicator valve with tamper switch reporting to the fire alarm control panel (FACP) The ground floor entry penetration shall be sleeved per NFPA 13 requirements for seismic protection. The sprinkler entry riser shall include a double check backflow preventer, a fire department connection, and a wall hydrant for testing of backflow preventer. The sprinkler system shall include an indicating control valve for each sprinkler system riser, a flow switch reporting to the FACP, and an exterior alarm bell. All control valves shall be OS&Y gate type and shall be provided with tamper switches connected to the FACP. Facilities with multiple floors shall be provided with floor control valves for each floor. The floor control valve assembly shall be in accordance with UFC 3-600-01, Figure 4-1.

6.13.2.2 Exterior Hose Stream

Exterior hose stream demand shall be in accordance with UFC 3-600-01. Exterior hose stream demand for systems designed in accordance with NFPA 13R shall be 250 gpm. Exterior hose stream demand shall be included in the sprinkler system hydraulic calculations.

6.13.2.3 Backflow Preventer

An assembly consisting of a double check backflow preventer and associated piping and fittings located outside the building shall be designed and installed by the contractor per the requirements of Appendix CC, Augusta Utility Department Water and Sanitary Sewer Systems - Guidelines and Backflow Preventer. (All utility costs due to construction shall be included in the contractor's base bid.) An exterior wall hydrant with dual hose connections with OS&Y valve shall be provided in the mechanical room to allow testing of backflow preventer at design flow as required by NFPA 13.

6.13.2.4 Fire Department Connection

A fire department connection shall be provided for each building with sprinkler protection. These shall be located to be directly accessible to the fire department.

6.13.3 Elevators

The fire protection features of elevators, hoist ways, machine rooms and lobbies shall be in accordance with UFC 3-600-01, ASME A17.1, NFPA 13 and NFPA 72.

6.13.4 System Components and Hardware

Materials for the sprinkler system, fire pump system, and hose standpipe system shall be in accordance with NFPA 13 and NFPA 20.

6.13.5 Protection of Piping Against Earthquake Damage

The Contractor shall confirm the seismic requirements for the project based on the requirements of the relevant codes and results of the geotechnical investigation. If required, sprinkler and fire pump piping systems shall be protected against damage from earthquakes. Seismic protection shall include flexible and rigid couplings, sway

bracing, seismic separation assemblies where piping crosses building seismic separation joints, and other features as required by NFPA 13 for protection of piping against damage from earthquakes.

6.13.6 Fire Water Supply

Fire flow test data is provided in Appendix D.

6.13.7 Fire Pump

The requirement for a fire pump installation shall be determined by the Contractor based on fire flow test data from the project site and fire protection system design requirements for the project. If required a complete fire pump installation shall be provided for the facility. It shall comply with the requirements of UFC 3-600-01, NFPA 13 and NFPA 20. The Contractor shall submit fire pump design analysis and drawings in the design requirements.

6.13.8 Fire alarm and Detection

Refer to Paragraph “Fire Alarm and Detection System” in PARTS 5 and 6 for design requirements.

6.13.9 Building Construction

Construction shall comply with requirements of UFC 3-600-01, the International Building Code and NFPA 101.

6.13.9.1 Fire Extinguisher Cabinets and Brackets

Fire Extinguisher cabinets and brackets shall be provided when fire extinguishers are required by UFC 3-600-01 and NFPA 101. Placement of cabinets and brackets shall be in accordance with NFPA 10. Semi-recessed cabinets shall be provided in finished areas and brackets shall be provided in non-finished areas (such as utility rooms, storage rooms, shops, and vehicle bays). Fire extinguishers shall not be provided in this contract.

6.13.9.2 Interior Wall and Ceiling Finishes

Interior wall and ceiling finishes and movable partitions shall conform to the requirements of UFC 3-600-01 and NFPA 101.

6.14. SUSTAINABLE DESIGN

6.14.1. LEED Rating Tool Version. This project shall be executed using LEED-NC Version 3.

6.14.2. The minimum requirement for this project is to achieve LEED Silver level. Each non-exempt facility (building plus sitework) must achieve this level. In addition to any facilities indicated as exempt in paragraph 3, the following facilities are exempt from the minimum LEED achievement requirement: *2 None.

6.14.3. Credit Validation: LEED registration, compiling of documentation at LEED OnLine and use of the LEED Letter Templates is required. Registration and payment of registration fees will be by the Government. Administration/team management of the online project will be by the Contractor. Validation of credits will be accomplished by the Government. LEED certification of the project by the Contractor is not required. The Government may choose to seek LEED certification of the project, in which case the Government will pay certification fees and coordinate with the GBCI and the Contractor will furnish audit data as requested at no additional cost.

6.14.4. Commissioning: See Appendix M for Owner's Project Requirements document(s).

6.14.5. LEED Credits Coordination. The following information is provided relative to Sustainable Sites and other credits.

SS Credit 1 Site Selection:

Project site IS NOT considered prime farmland.

Project site is five feet or more above 100-year flood elevation.

Project site contains no habitat for threatened or endangered species.

No portion of project site lies within 100 feet of any water, wetlands or areas of special concern.

Project site WAS NOT previously used as public parkland.

SS Credit 2 Development Density & Community Connectivity.

Project site DOES NOT meets the criteria for this credit.

SS Credit 3 Brownfield Redevelopment.

Project site DOES NOT meets the criteria for this credit.

SS Credit 4.1 Public Transportation Access.

Project site DOES NOT meets the criteria for this credit.

EA Credit 6 Green Power.

35% of the project's electricity WILL NOT will be provided through an Installation renewable energy contract. Do not purchase Renewable Energy Credits (REC's) to earn this credit.

MR Credit 2 Construction Waste Management.

The Installation does not have an on-post recycling facility available for Contractor's use.

Regional Priority Credits (Version 3 only)

The project zip code is 30905.

6.14.6. LEED Credit Preferences, Guidance and Resources. See Appendix L LEED Project Credit Guidance for supplemental information relating to individual credits.

6.14.7. Not Used

6.14.8. Additional Information

The Government will register the project and transfer administration of the registered project to the Contractor after award.

6.15. ENVIRONMENTAL

The lead and asbestos report is located in Appendix AA.

6.16. PERMITS

The Contractor shall be responsible for obtaining all permits (local, state and federal) required for design and construction of all site features and utilities, this shall include but not be limited to Erosion and Sediment Control Permit from the State of GEORGIA.

6.16.1 Air Permit Information

a. Pursuant to satisfying requirements under the Clean Air Act, at or before the 60 percent design stage, the designer of record shall submit the following to the installation's environmental office: (1) a listing of boilers and domestic hot water heaters that will be fired by natural gas, propane, and/or fuel oil, (2) the fuel or fuels (primary and backup, if applicable) that will be utilized for each piece of equipment, (3) the quantity of each particular size, (4) the respective input firing rate. The document shall also provide a point of contact and an alternate point of contact, should the environmental office require additional information from the designer of record during the permitting process. Furthermore, two copies of the document shall also be sent to the Savannah District, one to the Project Manager for placement in Central Files, and another to the Mechanical Section.

b. This document shall not be sent prematurely, since any increase in boiler sizing subsequent to submission of the document will require revision to the permitting process. In any event, if there is a change in equipment sizing during refinement of the design process, an updated copy of said document shall be submitted per the guidance above.

c. Additionally, the designer of record is responsible for incorporating into the design the equipment accessories required for compliance with the governing environmental laws. This includes, but is not limited to, determining the need for individual metering and the level of emissions monitoring required. In the first design submittal the design narrative shall specifically address those features that will be incorporated into the boiler system design to assure compliance with the applicable environmental laws of the State.

d. In addition, the designer of record shall submit to the installation’s environmental office the final Boiler(s) BTU’s a minimum of 120 days prior to anticipated construction start date.

e. Normally, for fast track design-build contracts, the construction permit will not have been obtained prior to award of the design-build contract. No construction associated with the building(s) housing the boiler(s) or other source(s) of contaminant can be done prior to obtaining the required permit.

6.17. DEMOLITION

See specific discipline sections for demolition.

6.18. ADDITIONAL FACILITIES

6.18 Additional Facilities

6.18.1 Government Field Office (Temporary Facility)

6.18.1.1 Existing Government Field Office

TTEC-TESORO, currently on an adjacent site for the FY 2008 TBUP Renovations, has provided a leased trailer-type mobile office (with fixtures and furnishings) for the Government Field Office. The lease on this trailer may be available for transfer to a new contractor. The Contractor may, at its option, coordinate with TTEC-TESORO to determine availability and to transfer the lease of the existing trailer. If this option is chosen, the Contractor shall be responsible for all coordination with TTEC-TESORO and shall ensure that facilities meet the requirements of 6.18.1.2: Field Office Specifications.

6.18.1.2 Field Office Specifications

The Contractor shall provide the Government Field Engineer with a mobile trailer-type office to include the size and functional relationships and spaces, as indicated hereafter. Full utilities and services shall be provided including heating, ventilation, and air conditioning (HVAC); plumbing water and sewer; electric light and power; safety/security, and communications telephone and data. The Contractor shall provide high-speed internet service for all workstations as part of the Government's office. All charges for the high speed internet service for the government office shall be borne by the Contractor. Construction of the office, including fire alarm system, shall meet the latest versions of building codes including IBC, NFPA 101, NEC, and IPC. Additional requirements shall be as follows:

HVAC - Office shall be divided into a minimum of three separate thermostatically controlled zones; Field Engineer Private Office area, COE Administrative and Technical Support area, and Conference Room/Break Room area. Air conditioning shall be capable of maintaining the office at 50 percent relative humidity and a room temperature 30 degrees F below the outside air temperature when the outside air temperature is 95 degrees F.

Plumbing - Provide hot water heater for hot water service to the Conference Room/Break Room area and Latrines. Plumbing fixture requirements by room include: Conference Room/Break Room area - one stainless steel, double compartment sink; Latrines - one lavatory each (one meeting ADA), one toilet each (one meeting ADA)

Electric Lighting and Power - Offices shall be adequately lighted for general work throughout with illumination levels of 200 to 500 luminars at desktop throughout the facility. Provide minimum duplex power receptacle adjacent to each LAN connection indicated in Communications paragraph. Additional power requirements are as follows:

1) Conference Room/Break Room area - provide minimum 2 GFI duplex receptacles on two separate dedicated circuits along counter, and duplex receptacle at refrigerator

2) Latrines - provide minimum one GFI duplex receptacle in each latrine

3) Field Engineer Private Office area and Conference Room/Break Room area - provide minimum one duplex receptacle each wall in private office and conference room.

4) COE Administrative and Technical Support area - provide a minimum of two duplex receptacles for each workstation.

5) Communications Closet - provide two duplex receptacles minimum

Communications - The Contractor shall provide high-speed internet service for all workstations as part of the Government's office. All charges for the high speed internet service for the government office shall be borne by the Contractor. Provide minimum 16 CAT 6 LAN connections and 12 telephone connections. LAN connections shall be provided at each modular workstation, on each main wall in the Conference Room/Break Room area. All telephone and data connections shall terminate in a common Communication Closet. Telephone connections shall be provided at each modular workstation. Breakdown of LAN and telephone connections by zone:

1) Field Engineer Private Office area - 2 LAN, 1 telephone

2) COE Administrative and Technical Support area - 11 LAN, 9 telephones

3) Conference Room/Break Room area- 3 LAN, 2 telephones Telephones shall be provided as follows: one at each workstation, one at the plan layout table, and two in the Conference Room/Break Room area as described in Fixtures and Furnishings paragraph. A multi-sheet feed, plain-paper fax machine shall be provided in the COE Administrative and Technical Support area.

Finishes and Appearance: Flooring shall be VCT with resilient base, unless otherwise approved by the Contracting Officer. Carpeting will not be approved. Walls shall be vinyl covered or painted gypsum wallboard, unless otherwise approved by the Contracting Officer. Ceiling finish shall be acoustical tile ceiling throughout, unless otherwise approved by the Contracting Officer. Office shall present a clean and neat exterior appearance and shall be in a state of good repair. Vented skirting shall be provided for the facility to hide the support structures. Offices which, in the opinion of the Contracting Officer, require excessive painting or maintenance will not be allowed on the military property.

Setup – All setup work shall be in accordance with the manufacturer’s setup instructions, and all applicable Federal, State and local codes and regulations. All units must meet the Federal wind load rating of 110 miles per hour. The provisions of these specifications and typical details shall not be construed as lowering standards established by local laws, ordinance or regulations set forth herein. The Contractor shall obtain and pay for all required permits for hauling, installation and local inspections as required by local authority having jurisdiction.

Fixtures and Furnishings

1) Provide modular workstations in total quantities by zone as follows: Two (2) Field Engineer Private Office areas - 1 modular workstation each, COE Administrative and Technical Support area - 7 total modular work stations (approx. 42” partition height). Modular workstations shall be sized to accommodate a computer workstation, storage space and bookshelf (min. 12 feet of work surface), desk chair and office chair.

2) Additional fixture and furnishing requirements by room are as follows:

i. The Field Engineer Private Office areas shall have and a 30-inch by 6 feet long layout table with drawer(s), a total of two office chairs and two tall bookcases (total for area), one printer stand.

ii. The COE Administrative and Technical Support area shall have three tall bookcases, four 5-drawer letter-sized locking file cabinets, two vertical plan racks for approx. 12 full-size plan sets, one 4 by 12 foot (min) plan table with storage for plans underneath, one color copier/scanner/printer (multi-sheet feed, able to collate, letter thru 11 x 17 paper, LAN accessible), one storage/supply cabinet.

iii. Conference Room/Break Room area shall have conference room table to accommodate 12 people, twelve conference room chairs, large whiteboard at one end of the room suitable for use as projector screen or for use in presentations, one full size refrigerator, one full size microwave, one water cooler.

iv. Latrines: Toilet accessories shall be as follows: one double roll toilet tissue dispenser, one 36 inch and one 42 inch grab bar (in ADA compliant latrine only), one glass mirror per lavatory (ADA type in ADA latrine), one heavy duty metal shelf per lavatory, and one combination paper towel dispenser/waste receptacle.

Space Requirements:

1) The Field Engineer Private Office areas shall have 150 sf net (min)

2) COE Administrative and Technical Support area:

i. Each workstation area shall have 100 sf (net)

ii. All other equipment and circulation areas shall meet AR 405-70 and ADA space requirements

iii. Contractor shall provide space for two future workstations in this area. Space for each workstation shall be as noted above.

3) Conference Room/Break Room area shall meet AR 405-70 and ADA space requirements

4) Latrines shall meet AR 405-70 space requirements (one shall meet ADA requirements)

5) Communications Closet shall be 24 sf (min) (4’x6’) Exterior Doors and Windows - Provide a sufficient number of operable windows with insect screens for adequate light and ventilation.

At minimum the Field Engineer Private Office areas shall have one large window and the COE Administrative and Technical Support and Conference Room/Break Room areas shall have at least one window per 12 feet of linear wall space. The windows shall be arranged to open and to be securely fastened from the inside. Glass panels in windows shall be protected by bars or heavy mesh screens to prevent easy access to the building through these panels. Window treatments shall be blinds (curtains will not be acceptable). The unit shall have two ADA compliant metal entrance doors with dead bolt hardware, opening onto the deck. Exterior doors shall have non-removable hinge pins and dead bolts manually operated from the inside and keyed from the outside. Communications Closet door shall have lock keyed from the outside.

Site Requirements – The office site will be designated by the Contracting Officer prior to award. A gravel parking lot (4 inches gravel depth and suitable for parking a minimum of 15 vehicles) sufficiently graded to allow easy access and egress. This could include one concrete entranceway made through existing curb and gutter. The entire facility and parking area will be secured with a 6 foot high chain link fence with brown, UV light resistant, plastic fabric mesh netting (similar to tennis court or other screening), topped with 3-strand barbed wire. In addition to the vehicle gate, 2 pedestrian gates will be installed. Final site plan and facility locations will approved by the Contracting Officer.

The complex will be provided and installed onsite within 45 days of NTP.

Security and Safety Provisions: Smoke detectors/alarms shall be provided to meet all national and local fire code requirements. A 10-pound multi-purpose dry chemical fire extinguisher shall be wall provided and mounted at each building exit and kitchen area. Each entrance door shall be provided with a keyed lock, and provide one weatherproof porch light at each door with switches. Adequate outside security lighting shall be provided in parking lot areas and building perimeter and entrances. “Best Lock” locks with interchangeable cores shall be provided at each personnel gate, entrance gate, and exterior door, and Communications Closet door locks. All gate locks shall be keyed alike and all door locks shall be keyed alike. The lock supplier shall directly provide the Government all lock cores sets, 15 keys and one core key for each core set. The contractor shall provide to the Government a new lock box suitable for storing 12 sets of vehicle keys. The lockbox shall be in its original packaging and have its original keysets. The lockbox shall be mounted at a location to be designated by local Government personnel once the building is completed.

Temporary Office Steps, Canopies, Decks and Ramp – Wood, Steel, or Aluminum - The Contractor shall provide two sets of steps that are at least 36” wide and one approximately 15’ wide deck (full width of office trailer) to connect front entrance doors, with a handicap ramp that meets ADA requirements, installed along the building. A canopy shall be constructed over the entire deck and attached to the structure. All other entrances shall have covered landings of approximately 8 feet by 10 feet. Office utility steps shall meet the Occupational Safety and Health Act Standard (OSHA). All handrails shall be constructed with 2-inch by 4-inch safety edge lumber or steel and shall be provided for all steps. Steps shall have a stable foundation and be level in both directions. All wood handrails shall be well sanded to eliminate splinters and attached with screws. All wood members shall be pressure treated. The front deck shall be assembled with deck screws.

Strap Specifications - All tie-down straps shall conform to ASTM D 3953. All tie-down straps, etc., shall be Type 1, Finish B, Grade 1, steel strapping 1-1/4 inches by 0.037 inch thick minimum steel and shall have a weather resistance to deterioration at least equivalent to that provided by a coating of zinc on steel of not less than 0.40 ounce per square foot of surface coated or equivalent, and capable of resisting a working load equal to 4,725 pounds. Tie-down straps, etc., shall be marked at least every l5 inches, identifying the model number and strap producer’s name and that the material complies with ASTM D 3953.

Maintenance/Operational Support

a. Custodial: Custodial service shall be provided by the Contractor a minimum of one time per week.

b. Building Maintenance: The Contractor shall keep the building in a state of good repair for the duration of the contract. All maintenance repairs shall be made promptly and to the satisfaction of the Contracting Officer.

c. Grounds Maintenance: Fencing shall be kept in a state of good repair and proper alignment. Grass located within the boundaries of the site shall be mowed for the duration of the project. Grass and vegetation along fences, buildings, under trailers, and in areas not accessible to mowers shall be edged or trimmed neatly.

d. Bottled Water Service: The Contractor shall provide bottled potable drinking water service and water cooler. All charges for bottled water service for the temporary field office shall be borne by the Contractor.

e. Access to Buildings and Fenced Area: All work requiring access to building interiors excluding, crawl spaces, etc., and all other work shall be performed between 7:30 a.m.

and 4 p.m. (normal working hours for base where project is located) excluding official holidays, unless otherwise indicated or approved by the Contracting Officer. Requests to work during other than these normal hours shall be made in writing at least 36 hours in advance. For example, a request to work on a Saturday shall be submitted no later than Thursday at noon. Government office facilities will not be available to the Contractor's personnel.

Termiticide Application Report

A Termiticide Application Report (no form number) shall be completed for each structure receiving termiticide treatment. The Contractor shall obtain the form from the Fort Gordon DPWL pest management coordinator through the Contracting Officer. All requested information shall be provided in detail. The location of application shall be clearly designated, e.g., building number, name, or address. If necessary, provide a map showing location of structure with the report.

End of Section 01 10 00.W912HN-07-X-0710

SECTION 01 32 01.00 10
PROJECT SCHEDULE

1.0 GENERAL

1.1. REFERENCES

1.2. QUALIFICATION

2.0 PRODUCTS (NOT APPLICABLE)

3.0 EXECUTION

3.1. GENERAL REQUIREMENTS

3.2. BASIS FOR PAYMENT AND COST LOADING

3.3. PROJECT SCHEDULE DETAILED REQUIREMENTS

3.4. PROJECT SCHEDULE SUBMISSIONS

3.5. SUBMISSION REQUIREMENTS

3.6. PERIODIC SCHEDULE UPDATE MEETINGS

3.7. REQUESTS FOR TIME EXTENSIONS

3.8. DIRECTED CHANGES

3.9. WEEKLY PROGRESS MEETINGS

3.10. OWNERSHIP OF FLOAT

3.11. TRANSFER OF SCHEDULE DATA INTO RMS/QCS

1.0 GENERAL

1.1. REFERENCES

The publications listed below form a part of this specification to the extent referenced. The publications are referred to within the text by the basic designation only.

- U.S. ARMY CORPS OF ENGINEERS (USACE) ER 1-1-11 (1995) Progress, Schedules, and Network Analysis Systems http://www.usace.army.mil/publications/eng-regs/er1-1-11/entire.pdf
- Army Corps of Engineers ECB No. 2005-10, (31 August 2005) Scheduling Requirements for Testing of Mechanical Systems in Construction http://www.wbdg.org/ccb/ARMYCOE/COEECB/ecb_2005_10.pdf

1.2. QUALIFICATIONS

The Contractor shall designate an authorized representative who shall be responsible for the preparation of the schedule and all required updating (statusing) and preparation of reports. The authorized representative shall be experienced in scheduling projects similar in nature to this project and shall be experienced in the use of the scheduling software that meets the requirements of this specification.

2.0 PRODUCTS (Not Applicable)

3.0 EXECUTION

3.1. GENERAL REQUIREMENTS

3.1.1. Submit a project schedule as specified herein for approval showing the sequence in which the Contractor proposes to perform the work and dates on which the Contractor contemplates starting and completing all schedule activities. The scheduling of the entire project, including the design and construction sequences is required. Contractor management personnel shall actively participate in its development. Designers, subcontractors and suppliers working on the project shall also contribute in developing an accurate project schedule. The schedule must be a forward planning as well as a project monitoring tool. The approved project schedule shall be used to measure the progress of the work and to aid in evaluating requests for excusable time extensions. The schedule shall be cost loaded and activity coded as specified herein. The schedule will provide the basis for all progress payments. If the Contractor fails to submit any schedule within the time prescribed, the Contracting Officer may withhold approval of progress payments until the Contractor submits the required schedule

3.1.2. Status the schedule on at least a monthly basis, as specified herein. If in the opinion of the Contracting Officer, the Contractor falls behind the approved schedule, the Contractor shall take steps necessary to improve its progress including those that may be required by the Contracting Officer, without additional cost to the Government. In this circumstance, the Contracting Officer may require the Contractor to increase the number of shifts, overtime operations, days of work, and/or the amount of construction plant, and to submit for approval any supplementary schedule or schedules as the Contracting Officer deems necessary to demonstrate how the approved rate of progress will be regained. See paragraph 3.7.4.

3.1.3. Failure of the Contractor to comply with the requirements of the Contracting Officer shall be grounds for a determination by the Contracting Officer that the Contractor is not prosecuting the work with sufficient diligence to ensure completion within the time specified in the contract. Upon making this determination, the Contracting Officer may terminate the Contractor's right to proceed with the work, or any separable part of it, in accordance with the default terms of the contract.

3.2. BASIS FOR PAYMENT AND COST LOADING

The schedule shall be the basis for determining contract earnings during each update period and therefore the amount of each progress payment. Lack of an approved schedule update or qualified scheduling personnel will result in an inability of the Contracting Officer to evaluate contract earned value for the purposes of payment. Failure of the Contractor to provide all information, as specified herein will result in the disapproval of the preliminary, initial and subsequent schedule updates. In the event schedule revisions are directed by the Contracting Officer and those revisions have not been included in subsequent revisions or updates, the Contracting Officer may hold retainage up to the maximum allowed by contract, each payment period, until such revisions to the

project schedule have been made. Activity cost loading shall be reasonable as determined by the Contracting Officer. The aggregate value of all activities coded to a contract CLIN as specified herein shall equal the value of the CLIN on the Schedule.

3.3. PROJECT SCHEDULE DETAILED REQUIREMENTS

The computer software system utilized to produce and update the project schedule shall be capable of meeting all requirements of this specification. Failure of the Contractor to meet the requirements of this specification will result in the disapproval of the schedule. Scheduling software that meets the activity coding structure defined in the Standard Data Exchange Format (SDEF) in ER-1-1-11(1995) referenced herein are Primavera Project Planner (P3) by Primavera, and Open Plan by Deltek.

3.3.1. Use of the Critical Path Method

Use the Critical Path Method (CPM) of network calculation to generate the project schedule. Prepare the project schedule using the Precedence Diagram Method (PDM).

3.3.2. Level of Detail Required

Develop the project schedule to an appropriate level of detail. Failure to develop the project schedule to an appropriate level of detail, as determined by the Contracting Officer, will result in its disapproval. The Contracting Officer will consider, but is not limited to, the following characteristics and requirements to determine appropriate level of detail:

3.3.2.1. Activity Durations

Reasonable activity durations are those that allow the progress of ongoing activities to be accurately determined between update periods. Less than 2 percent of all non-procurement activities shall have Original Durations (OD) greater than 20 work days or 30 calendar days. Procurement activities are defined herein.

3.3.2.2. Design and Permit Activities

Design and permit activities, including necessary conferences and follow-up actions and design package submission activities shall be included. The Contractor shall include the design schedule in the project schedule, showing the sequence of events involved in carrying out the project design tasks within the specific contract period. This shall be at a detailed level of scheduling sufficient to identify all major design tasks, including those that control the flow of work. The schedule shall include review and correction periods associated with each item.

3.3.2.3. Procurement Activities

The schedule must include activities associated with the submittal, approval, procurement, fabrication and delivery of long lead materials, equipment, fabricated assemblies and supplies. Long lead procurement activities are those with an anticipated procurement sequence of over 90 calendar days. A typical procurement sequence includes the string of activities: submit, approve, procure, fabricate, and deliver.

3.3.2.4. Mandatory Tasks

The following tasks must be included and properly scheduled:

3.3.2.4.1. Submission, review and acceptance of design packages

3.3.2.4.2. Submission of mechanical/electrical/information systems layout drawings

3.3.2.4.3. Submission and approval of O & M manuals

3.3.2.4.4. Submission and approval of as-built drawings

3.3.2.4.5. Submission and approval of 1354 data and installed equipment lists

3.3.2.4.6. Submission and approval of testing and air balance (TAB)

3.3.2.4.7. Submission of TAB specialist design review report

3.3.2.4.8. Submission and approval of fire protection specialist

3.3.2.4.9. Submission and approval of testing and balancing of HVAC plus commissioning plans and data. Develop the schedule logic associated with testing and commissioning of mechanical systems to a level of detail consistent with Engineering and Construction Bulletin (ECB) No. 2005-10 dated 31 August 2005.

3.3.2.4.10. Air and water balancing

3.3.2.4.11. HVAC commissioning

3.3.2.4.12. Controls testing plan submission

3.3.2.4.13. Controls testing

3.3.2.4.14. Performance Verification testing

3.3.2.4.15. Other systems testing, if required

3.3.2.4.16. Contractor's pre-final inspection

3.3.2.4.17. Correction of punch list from Contractor's pre-final inspection

3.3.2.4.18. Government's pre-final inspection

3.3.2.4.19. Correction of punch list from Government's pre-final inspection

3.3.2.4.20. Final Inspection

3.3.2.5. Activity Responsibility Coding (RESP)

Assign Responsibility Code for all activities to the Prime Contractor, Subcontractor or Government agency responsible for performing the activity. Activities coded with a Government Responsibility code include, but are not limited to: Government approvals, Government design reviews, environmental permit approvals by State regulators, Government Furnished Equipment (GFE) and Notice to Proceed (NTP) for phasing requirements. Code all activities not coded with a Government Responsibility Code to the Prime Contractor or Subcontractor responsible to perform the work. Activities shall not have more than one Responsibility Code. Examples of acceptable activity code values are: DOR (for the designer of record); ELEC (for the electrical subcontractor); MECH (for the mechanical subcontractor); and GOVT (for USACE). Unacceptable code values are abbreviations of the names of subcontractors.

3.3.2.6. Activity Work Area Coding (AREA)

Assign Work Area code to activities based upon the work area in which the activity occurs. Define work areas based on resource constraints or space constraints that would preclude a resource, such as a particular trade or craft work crew from working in more than one work area at a time due to restraints on resources or space. Examples of Work Area Coding include different areas within a floor of a building, different floors within a building, and different buildings within a complex of buildings. Activities shall not have more than one Work Area Code. Not all activities are required to be Work Area coded. A lack of Work Area coding will indicate the activity is not resource or space constrained.

3.3.2.7. Contract Changes/Requests for Equitable Adjustment (REA) Coding (MODF)

Assign Activity code to any activity or sequence of activities added to the schedule as a result of a Contract Modification, when approved by Contracting Officer, with a Contract Changes/REA Code. Key all Code values to the Government's modification numbering system.

Any activity or sequence of activities added to the schedule as a result of alleged constructive changes made by the Government may be added to a copy of the current schedule, subject to the approval of the Contracting Officer. Assign Activity codes for these activities with a Contract Changes/REA Code. Key the code values to the Contractor's numbering system. Approval to add these activities does not necessarily mean the Government accepts responsibility and therefore liability for such activities and any associated impacts to the schedule, but rather the Government recognizes such activities are appropriately added to the schedule for the purposes of maintaining a realistic and meaningful schedule. Such activities shall not be Responsibility Coded to the Government unless approved. An activity shall not have more than one Contract Changes/REA Code

3.3.2.8. Contract Line Item (CLIN) Coding (BIDI)

Code all activities to the CLIN on the Contract Line Item Schedule to which the activity belongs. An activity shall not contain more than one CLIN Item Code. CLIN Item code all activities, even when an activity is not cost loaded.

3.3.2.9. Phase of Work Coding (PHAS)

Assign Phase of Work Code to all activities, based upon the phase of work in which the activity occurs. Code activities to either a Design Phase or a Construction Phase. Code fast track design and construction phases proposed by the Contractor to allow filtering and organizing the schedule by fast track design and construction packages. If the contract specifies construction phasing with separately defined performance periods, identify a Construction Phase Code to allow filtering and organizing the schedule accordingly. Each activity shall have only one Phase of Work code.

3.3.2.10. Category of Work Coding (CATW)

Assign Category of Work code to all Activities based upon the category of work which the activity belongs. Category of Work Code must include, but is not limited to: Design, Design Submittal, Construction Submittal, Approval, Acceptance, Procurement, Fabrication, Delivery, Weather Sensitive Installation, Non-Weather Sensitive Installation, Start Up, Test, and Turnover. Assign a Category of Work code to each activity. Each activity shall have only one Category of Work Code.

3.3.2.11. Definable Features of Work Coding (FOW1, FOW2, FOW3)

Assign a Definable Feature of Work Code to appropriate activities based on the definable feature of work to which the activity belongs. Definable Feature of Work is defined in Specification Section 01 45 04.00 10, Contractor Quality Control. An activity shall not have more than one Definable Feature of Work Code. Not all activities are required to be Definable Feature of Work Coded.

3.3.3. Scheduled Project Completion and Activity Calendars

The schedule interval shall extend from NTP date to the required contract completion date. The contract completion activity (End Project) shall finish based on the required contract duration in the accepted contract proposal, as adjusted for any approved contract time extensions. The first scheduled work period shall be the day after NTP is acknowledged by the Contractor. Schedule activities on a calendar to which the activity logically belongs. Activities may be assigned to a 7 day calendar when the contract assigns calendar day durations for the activity such as a Government Acceptance activity. If the Contractor intends to perform physical work less than seven days per week, schedule the associated activities on a calendar with non-work periods identified including weekends and holidays. Assign the Category of Work Code - Weather Sensitive Installation to those activities that are weather sensitive. Original durations must account for anticipated normal adverse weather. The Government will interpret all work periods not identified as non-work periods on each calendar as meaning the Contractor intends to perform work during those periods.

3.3.3.1. Project Start Date

The schedule shall start no earlier than the date on which the NTP was acknowledged. Include as the first activity in the project schedule an activity called "Start Project" or "NTP". The "Start Project" activity shall have an "ES" constraint date equal to the date that the NTP was acknowledged, with a zero day duration.

3.3.3.2. Schedule Constraints and Open Ended Logic

Constrain completion of the last activity in the schedule by the contract completion date. Schedule calculations shall result in negative float when the calculated early finish date of the last activity is later than the contract completion date. Include as the last activity in the project schedule an activity called "End Project". The "End Project" activity shall have an "LF" constraint date equal to the contract completion date for the project, and with a zero day duration or by using the “project must finish by” date in the scheduling software. The schedule shall have no constrained dates other than those specified in the contract. The use of artificial float constraints such as “zero fee float” or “zero total float” are typically prohibited. There shall only be 2 open ended activities: Start Project (or NTP) with no predecessor logic and End Project with no successor logic.

3.3.3.3. Early Project Completion

In the event the Preliminary or Initial project schedule calculates an early completion date of the last activity prior to the contract completion date, the Contractor shall identify those activities that it intends to accelerate and/or those activities that are scheduled in parallel to support the Contractor's "early" completion. The last activity shall have a late finish constraint equal to the contract completion date and the schedule will calculate positive float. The Government will not approve an early completion schedule with zero float on the longest path. The Government is under no obligation to accelerate activities for which it is responsible to support a proposed early contract completion.

3.3.4. Interim Completion Dates

Constrain contractually specified interim completion dates to show negative float when the calculated early finish date of the last activity in that phase is later than the specified interim completion date.

3.3.4.1. Start Phase

Include as the first activity for a project phase an activity called "Start Phase X" where "X" refers to the phase of work. The “Start Phase X" activity shall have an "ES" constraint date equal to the date on which the NTP was acknowledged, and a zero day duration.

3.3.4.2. End Phase

Include as the last activity for a project phase an activity called "End Phase X" where "X" refers to the phase of work. The "End Phase X" activity shall have an "LF" constraint date equal to the specified completion date for that phase and a zero day duration.

3.3.4.3. Phase “X” Hammock

Include a hammock type activity for each project phase called "Phase X" where "X" refers to the phase of work. The "Phase X" hammock activity shall be logically tied to the earliest and latest activities in the phase.

3.3.5. Default Progress Data Disallowed

Do not automatically update Actual Start and Finish dates with default mechanisms that may be included in the scheduling software. Activity Actual Start (AS) and Actual Finish (AF) dates assigned during the updating process shall match those dates provided from Contractor Quality Control Reports. Failure of the Contractor to document the AS and AF dates on the Daily Quality Control report for every in-progress or completed activity, and failure to ensure that the data contained on the Daily Quality Control reports is the sole basis for schedule updating shall result in the disapproval of the Contractor's updated schedule and the inability of the Contracting Officer to evaluate Contractor progress for payment purposes. Updating of the percent complete and the remaining duration of any activity shall be independent functions. Disable program features which calculate one of these parameters from the other.

3.3.6. Out-of-Sequence Progress

Activities that have progressed before all preceding logic has been satisfied (Out-of-Sequence Progress) will be allowed only on a case-by-case basis subject to approval by the Contracting Officer. Propose logic corrections to eliminate all out of sequence progress or justify not changing the sequencing for approval prior to submitting an updated project schedule. Correct out of sequence progress that continues for more than two update cycles by logic revision, as approved by the Contracting Officer.

3.3.7. Negative Lags and Start to Finish Relationships

Lag durations contained in the project schedule shall not have a negative value. Do not use Start to Finish relationships (SF).

3.3.8. Calculation Mode

Schedule calculations shall retain the logic between predecessors and successors even when the successor activity starts and the predecessor activity has not finished. Software features that in effect sever the tie between predecessor and successor activities when the successor has started and the predecessor logic is not satisfied ("progress override") will not be allowed.

3.3.9. Milestones

The schedule must include milestone activities for each significant project event including but not limited to: milestone activities for each fast track design package released for construction; design complete; foundation/substructure construction complete; superstructure construction complete; building dry-in or enclosure complete to allow the initiation of finish activities; permanent power complete; and building systems commissioning complete.

3.4. PROJECT SCHEDULE SUBMISSIONS

Provide the submissions as described below. The data CD, reports, and network diagrams required for each submission are contained in paragraph SUBMISSION REQUIREMENTS.

3.4.1. Preliminary Project Schedule Submission

Submit the Preliminary Project Schedule, defining the Contractor's planned operations for the first 90 calendar days for approval within 15 calendar days after the NTP is acknowledged. The approved Preliminary Project Schedule will be used for payment purposes not to exceed 90 calendar days after NTP. Completely cost load the Preliminary Project Schedule to balance the contract award CLINS shown on the Price Schedule. Detail it for the first 90 calendar days. It may be summary in nature for the remaining performance period. It must be early start and late finish constrained and logically tied as previously specified. The Preliminary Project Schedule forms the basis for the Initial Project Schedule specified herein and must include all of the required Plan and Program preparations, submissions and approvals identified in the contract (for example, Quality Control Plan, Safety Plan, and Environmental Protection Plan) as well as design activities, the planned submissions of all early design packages, permitting activities, design review conference activities and other non-construction activities intended to occur within the first 90 calendar days. Schedule any construction activities planned for the first 90 calendar days after NTP. Constrain planned construction activities by Government acceptance of the associated design package(s) and all other specified Program and Plan approvals. Activity code any activities that are summary in nature after the first 90 calendar days with Responsibility Code (RESP) and Feature of Work code (FOW1, FOW2, FOW3)

3.4.2. Initial Project Schedule Submission

Submit the Initial Project Schedule for approval within 42 calendar days after NTP. The schedule shall demonstrate a reasonable and realistic sequence of activities which represent all work through the entire contract performance period. The Initial Schedule shall be at a reasonable level of detail as determined by the Contracting Officer. The schedule shall include detailed design and permitting activities, including but not limited to identification of individual design packages, design submission, reviews and conferences; permit submissions and any required Government actions; and long lead procurement activities required prior to design completion. The Initial Project Schedule shall include the entire construction sequence and all fast track construction activities, with as much detail as is known at the time but, as a minimum, shall include all construction start and completion milestone activities, and detailed construction activities through the dry-in milestone, including all activity coding and cost loading. Include the remaining construction, including cost loading, but it may be scheduled summary in nature. As the design proceeds and design packages are developed, fully detail the remaining construction activities concurrent with the monthly schedule updating process. Constrain construction activities by Government acceptance of associated designs. When the design is complete, incorporate into the then approved schedule update all remaining detailed construction activities that are planned to occur after the dry-in milestone.

3.4.3. Design Package Schedule Submission:

With each design package submitted to the Government, submit a frag-net schedule extracted from the then current Preliminary, Initial or Updated schedule which covers the activities associated with that Design Package including construction, procurement and permitting activities.

3.4.4. Periodic Schedule Updates

Based on the result of the meeting specified in PERIODIC SCHEDULE UPDATE MEETINGS, submit periodic schedule updates. These submissions shall enable the Contracting Officer to assess Contractor's progress. If the Contractor fails or refuses to furnish the information and project schedule data, which in the judgment of the Contracting Officer or authorized representative is necessary for verifying the Contractor's progress, the Contractor shall be deemed not to have provided an estimate upon which progress payment may be made. Update the schedule to include detailed procurement and construction activities as the design progresses, but not later than the submission of the final, un-reviewed design submission for each separate design package. The Contracting Officer may require submission of detailed schedule activities for any distinct construction that is started prior to submission of a final design submission, if such activity is authorized.

3.4.5. Standard Activity Coding Dictionary

Use the activity coding structure defined in the Standard Data Exchange Format (SDEF) in ER 1-1-11, Appendix A. This exact structure is mandatory, even if some fields are not used. A template SDEF compatible schedule backup file (sdef.prx) is available on the QCS website: www.rmssupport.com. The SDEF format is as follows:

Field	Activity Code	Length	Description
1	WRKP	3	Workers per Day
2	RESP	4	Responsible Party (e.g. GC, subcontractor, USACE)
3	AREA	4	Area of Work
4	MODF	6	Modification or REA number
5	BIDI	6	Bid Item (CLIN)
6	PHAS	2	Phase of Work
7	CATW	1	Category of Work
8	FOW1	10	Feature of Work (used up to 10 characters in length)
9	FOW2	10	Feature of Work (used up to 20 characters in length)
10	FOW3	10	Feature of Work (used up to 30 characters in length)

3.5. SUBMISSION REQUIREMENTS

Submit the following items for the Preliminary Schedule, Initial Schedule, and every Periodic Schedule Update throughout the life of the project:

3.5.1. Data CD’s

Provide two sets of data CD's containing the project schedule in the backup format. Each CD shall also contain all previous update backup files. File medium shall be CD. Label each CD, indicating the type of schedule (Preliminary, Initial, Update), full contract number, Data Date and file names. Each schedule shall have a unique file name as determined by the Contractor.

3.5.2. Narrative Report

Provide a Narrative Report with the Preliminary, Initial, and each Periodic Update of the project schedule, as the basis of the progress payment request. The Narrative Report shall include: a description of activities along the 2 most critical paths where the total float is less than or equal to 20 work days, a description of current and anticipated problem areas or delaying factors and their impact, and an explanation of corrective actions taken or required to be taken. The narrative report is expected to communicate to the Government, the Contractor's thorough analysis of the schedule output and its plans to compensate for any problems, either current or potential, which are revealed through its analysis. Identify and explain why any activities that, based their calculated late dates, should have either started or finished during the update period but did not.

3.5.3. Approved Changes Verification

Include only those project schedule changes in the schedule submission that have been previously approved by the Contracting Officer. The Narrative Report shall specifically reference, on an activity by activity basis, all changes made since the previous period and relate each change to documented, approved schedule changes.

3.5.4. Schedule Reports

The format, filtering, organizing and sorting for each schedule report shall be as directed by the Contracting Officer. Typically reports shall contain: Activity Numbers, Activity Description, Original Duration, Remaining Duration, Early Start Date, Early Finish Date, Late Start Date, Late Finish Date Total Float, Actual Start Date, Actual Finish Date, and Percent Complete. The following lists typical reports that will be requested. One or all of these reports may be requested for each schedule submission.

3.5.4.1. Activity Report

A list of all activities sorted according to activity number.

3.5.4.2. Logic Report

A list of detailed predecessor and successor activities for every activity in ascending order sorted by activity number.

3.5.4.3. Total Float Report

A list of all incomplete activities sorted in ascending order of total float. List activities which have the same amount of total float in ascending order of Early Start Dates. Do not show completed activities on this report.

3.5.4.4. Earnings Report by CLIN

A compilation of the Contractor's Total Earnings on the project from the NTP to the data date. This report shall reflect the earnings of specific activities based on the agreements made in the schedule update meeting defined herein. Provided that the Contractor has provided a complete schedule update, this report shall serve as the basis of determining progress payments. Group activities by CLIN Item number and sort by activity number. This report shall: sum all activities coded to a particular CLIN and provide a CLIN Item percent earned value; and complete and sum CLIN items to provide a total project percent complete. The printed report shall contain, for each activity: the Activity Number, Activity Description, Original Budgeted Amount, Quantity to Date, Percent Complete (based on cost), and Earnings to Date.

3.5.5. Network Diagram

The network diagram is required for the Preliminary, Initial and Periodic Updates. The network diagram shall depict and display the order and interdependence of activities and the sequence in which the work is to be accomplished.

The Contracting Officer will use, but is not limited to, the following conditions to review compliance with this paragraph:

3.5.5.1. Continuous Flow

Diagrams shall show a continuous flow from left to right with no arrows from right to left. Show the activity number, description, duration, and estimated earned value on the diagram.

3.5.5.2. Project Milestone Dates

Show dates on the diagram for start of project, any contract required interim completion dates, and contract completion dates.

3.5.5.3. Critical Path

Clearly show the critical path.

3.5.5.4. Banding

Organize activities as directed to assist in the understanding of the activity sequence. Typically, this flow will group activities by category of work, work area and/or responsibility.

3.5.5.5. S-Curves

Earnings curves showing projected early and late earnings and earnings to date.

3.6. PERIODIC SCHEDULE UPDATE MEETINGS

Conduct periodic schedule update meetings for the purposes of reviewing the Contractor's proposed out of sequence corrections, determining causes for delay, correcting logic, maintaining schedule accuracy and determining earned value. Meetings shall occur at least monthly within five days of the proposed schedule data date and after the Contractor has updated the schedule with Government concurrence respecting actual start dates, actual finish dates, remaining durations and percent complete for each activity it intend to status. Match the acutal start and finish dates with the dates exported, as described in paragraph 3.3.5. Provide a computer with the scheduling software loaded and a projector during the meeting which allows all meeting participants to view the proposed schedule update during the meeting. The meeting and resultant approvable schedule update shall be a condition precedent to a formal submission of the update as described in SUBMISSION REQUIREMENTS and to the submission of an invoice for payment. The meeting will be a working interactive exchange which will allow the Government and the Contractor the opportunity review the updated schedule on a real time and interactive basis. The Contractor's authorized scheduling representative will organize, sort, filter and schedule the update as requested by the Government. The meeting will last no longer than 8 hours. A rough draft of the proposed activity logic corrections and narrative report shall be provided to the Government 48 hours in advance of the meeting. The Contractor's Project Manager and Authorized Scheduler shall attend the meeting with the Authorized Representative of the Contracting Officer.

3.6.1. Update Submission Following Progress Meeting

Submit a complete update of the project schedule containing all approved progress, revisions, and adjustments, pursuant to paragraph SUBMISSION REQUIREMENTS not later than 4 working days after the periodic schedule update meeting, reflecting only those changes made during the previous update meeting.

3.6.2. Activity Statusing

Statusing information, including Actual Start Dates (AS), Actual Finish Dates (AF), Remaining Durations (RD) and Percent Complete shall be subject to the approval of the Government prior to the meeting. As a minimum, address the following items on an activity by activity basis during each progress meeting:

3.6.2.1. Actual Start and Finish Dates

Accurately status the AS and/or AF dates for each activity currently in-progress or completed since the last update The Government may allow an AF date to be assigned with the percent complete less than 100% to account for the value of work remaining but not restraining successor activities. Only assign AS dates when actual progress occurs on an activity.

3.6.2.2. Remaining Duration

Update the estimated RD for all incomplete activities independent of Percent Complete. Remaining durations may exceed the activity OD or may exceed the activity's prior update RD if the Government considers the current OD or RD to be understated based on current progress, insufficient work crews actually manning the job, unrealistic OD or deficiencies that must be corrected that restrain successor activities.

3.6.2.3. Percent Complete

Update the percent complete for each activity started, based on the realistic assessment of earned value. Activities which are complete but for remaining minor punch list work and which do not restrain the initiation of successor activities may be statused 100 percent complete. To allow for proper schedule management, cost load the correction of punch list from Government pre-final inspection activity(ies) not less than 1% of the total contract value, which activity(ies) may be statused 100 percent complete upon completion and correction of all punch list work identified during Government pre-final inspection(s).

3.6.2.4. Logic Changes

Specifically identify and discuss all logic changes pertaining to NTP on change orders, change orders to be incorporated into the schedule, contractor proposed changes in work sequence, corrections to schedule logic for out-of-sequence progress, and other changes that have been made pursuant to contract provisions. The Government will only approve logic revisions for the purpose of keeping the schedule valid in terms of its usefulness in calculating a realistic completion date, correcting erroneous logic ties, and accurately sequencing the work.

3.6.2.5. Other Changes

Other changes required due to delays in completion of any activity or group of activities include: 1) delays beyond the Contractor's control, such as strikes and unusual weather. 2) delays encountered due to submittals, Government Activities, deliveries or work stoppages which make re-planning the work necessary. 3) Changes required to correct a schedule that does not represent the actual or planned prosecution and progress of the work.

3.7. REQUESTS FOR TIME EXTENSIONS

In the event the Contractor believes it is entitled to an extension of the contract performance period, completion date, or any interim milestone date, furnish the following for a determination by the Contracting Officer: justification, project schedule data, and supporting evidence as the Contracting Officer may deem necessary. Submission of proof of excusable delay, based on revised activity logic, duration, and costs (updated to the specific date that the delay occurred) is a condition precedent to any approvals by the Government. In response to each Request For Proposal issued by the Government, the Contractor shall submit a schedule impact analysis demonstrating whether or not the change contemplated by the Government impacts the critical path.

3.7.1. Justification of Delay

The project schedule shall clearly display that the Contractor has used, in full, all the float time available for the work involved with its request. The Contracting Officer's determination as to the number of allowable days of contract extension shall be based upon the project schedule updates in effect for the time period in question, and other factual information.

Actual delays that are found to be caused by the Contractor's own actions, which result in a calculated schedule delay, will not be a cause for an extension to the performance period, completion date, or any interim milestone date.

3.7.2. Submission Requirements

Submit a justification for each request for a change in the contract completion date of less than 2 weeks based upon the most recent schedule update at the time of the NTP or constructive direction issued for the change. Such a request shall be in accordance with the requirements of other appropriate Contract Clauses and shall include, as a minimum:

3.7.2.1. A list of affected activities, with their associated project schedule activity number.

3.7.2.2. A brief explanation of the causes of the change

3.7.2.3. An analysis of the overall impact of the changes proposed.

3.7.2.4. A sub-network of the affected area

Identify activities impacted in each justification for change by a unique activity code contained in the required data file.

3.7.3. Additional Submission Requirements

The Contracting Officer may request an interim update with revised activities for any requested time extension of over 2 weeks. Provide this disk within 4 days of the Contracting Officer's request.

3.7.4. If Progress Falls Behind the Approved Project Schedule

3.7.4.1. Should progress fall behind the approved schedule (more than 20 work days of negative float) due to Contractor generated problems, promptly provide a supplemental recovery or completion schedule that illustrates its efforts to regain time to assure a completion by the required contract completion date.

3.7.4.2. The supplemental recovery or completion schedule will not replace the original, approved schedule as the official contract schedule. Continue to update the original, approved schedule on at least a monthly basis. In addition, the Contractor and the Contracting Officer will monitor the supplemental recovery or completion schedule on at least a bi-weekly basis to determine its effect on regaining the rate of progress to assure project completion by the contractually required completion date.

3.7.4.3. Do not artificially improve progress by simply revising the schedule logic, modifying or adding constraints, or shortening future work activity durations. Resource and manpower load the supplemental recovery schedule or completion schedule with crew size and productivity for each remaining activity, indicating overtime, weekend work, and/or double shifts needed to regain the schedule, in accordance with FAR 52.236.15, without additional cost to the Government. Indicate assumptions made and the basis for any logic, constraint, or duration changes used in the creation of the supplemental recovery or completion schedule in a narrative submitted for the Contracting Officer’s approval. Any additional resources or manpower must be evident at the work site. Do not modify the official contract schedule to include these assumptions.

3.7.4.4. Failure to perform work and maintain progress in accordance with the supplemental recovery or completion schedule may result in an interim and final unsatisfactory performance rating and/or may result in corrective action by the Contracting Officer in accordance with FAR 52.236-15.

3.8. DIRECTED CHANGES

If the NTP is issued for changes prior to settlement of price and/or time, submit proposed schedule revisions to the Contracting Officer within 2 weeks of the NTP being issued. The Contracting Officer will approve proposed revisions to the schedule prior to inclusion of those changes within the project schedule. If the Contractor fails to submit the proposed revisions, the Contracting Officer may furnish the Contractor with suggested revisions to the project schedule. The Contractor shall include these revisions in the project schedule until revisions are submitted and final changes and impacts have been negotiated. If the Contractor has any objections to the revisions furnished by the Contracting Officer, advise the Contracting Officer within 2 weeks of receipt of the revisions. Regardless of the objections, the Contractor shall continue to update the schedule with the Contracting Officer's revisions until a mutual agreement in the revisions is reached. If the Contractor fails to submit alternative revisions within 2 weeks of receipt of the Contracting Officer's proposed revisions, the Contractor will be deemed to have concurred with the

Contracting Officer's proposed revisions. The proposed revisions will then be the basis for an equitable adjustment for performance of the work.

3.9. WEEKLY PROGRESS MEETINGS

3.9.1. The Government and the Contractor shall meet weekly (or as otherwise mutually agreed to) between the meetings described in paragraph PERIODIC SCHEDULE UPDATE MEETINGS for the purpose of jointly reviewing the actual progress of the project as compared to the as planned progress and to review planned activities for the upcoming two weeks. The then current and approved schedule update shall be used for the purposes of this meeting and for the production and review of reports. The Contractor’s Project Manager and the Authorized Representative of the Contracting Officer shall attend. The weekly progress meeting will address the status of RFI’s, RFP’s and Submittals.

3.9.2. Provide a bar chart produced by the scheduling software, organized by Total Float and Sorted by Early Start Date, and a two week “look-ahead” schedule by filtering all schedule activities to show only current ongoing activities and activities schedule to start during the upcoming two weeks, organized by Work Area Code (AREA) and sorted by Early Start Date.

3.9.3. The Government and the Contractor shall jointly review the reports. If it appears that activities on the longest path(s) which are currently driving the calculated completion date (driving activities), are not progressing satisfactorily and therefore could jeopardize timely project completion, corrective action must be taken immediately. Corrective action includes but is not limited to: increasing the number of work crews; increasing the number of work shifts; increasing the number of hours worked per shift; and determining if Government responsibility coded activities require Government corrective action.

3.10. OWNERSHIP OF FLOAT

Float available in the schedule, at any time, shall not be considered for the exclusive use of either the Government or the Contractor.

3.11. TRANSFER OF SCHEDULE DATA INTO RMS/QCS

The Contractor shall download and upload the schedule data into the Resident Management System (RMS) prior to RMS databases being transferred to the Government and is considered to be additional supporting data in a form and detail required by the Contracting Officer pursuant to FAR 52.232-5 - Payments under Fixed-Price Construction Contracts. The receipt of a proper payment request pursuant to FAR 52.232-27 - Prompt Payment for Construction Contracts is contingent upon the Government receiving both acceptable and approvable hard copies and electronic export from QCS of the application for progress payment.

End of Section 01 32 01.00 10

SECTION 01 33 00
SUBMITTAL PROCEDURES

1.0 GENERAL

1.1. DEFINITIONS

1.2. NOT USED

1.3. SUBMITTAL CLASSIFICATION

1.4. APPROVED OR CONCURRED WITH SUBMITTALS

1.5. DISAPPROVED SUBMITTALS

1.6. WITHHOLDING OF PAYMENT

1.7. GENERAL

1.8. SUBMITTAL REGISTER

1.9. SCHEDULING

1.10. TRANSMITTAL FORM (ENG FORM 4025)

1.11. SUBMITTAL PROCEDURES

1.12. CONTROL OF SUBMITTALS

1.13. GOVERNMENT APPROVED SUBMITTALS

1.14. INFORMATION ONLY SUBMITTALS

1.15. STAMPS

1.0 GENERAL

1.1. DEFINITIONS

1.1.1. Submittal

Contract Clauses "FAR 52.236-5, Material and Workmanship," paragraph (b) and "FAR 52.236-21, Specifications and Drawings for Construction," paragraphs (d), (e), and (f) apply to all "submittals."

1.1.2. Submittal Descriptions (SD)

Submittals requirements are specified in the technical sections. Submittals are identified by SD numbers and titles as follows.

SD-01 Preconstruction Submittals

- Certificates of insurance.
- Surety bonds.
- List of proposed subcontractors.
- List of proposed products.
- Construction Progress Schedule.
- Submittal register.
- Schedule of prices.
- Accident Prevention Plan.
- Work plan.
- Quality control plan.
- Environmental protection plan.

SD-02 Shop Drawings

- Drawings, diagrams and schedules specifically prepared to illustrate some portion of the work.
- Diagrams and instructions from a manufacturer or fabricator for use in producing the product and as aids to the Contractor for integrating the product or system into the project.
- Drawings prepared by or for the Contractor to show how multiple systems and interdisciplinary work will be coordinated.

SD-03 Product Data

- Catalog cuts, illustrations, schedules, diagrams, performance charts, instructions and brochures illustrating size, physical appearance and other characteristics of materials or equipment for some portion of the work.
- Samples of warranty language when the contract requires extended product warranties.

SD-04 Samples

- Physical examples of materials, equipment or workmanship that illustrate functional and aesthetic characteristics of a material or product and establish standards by which the work can be judged.
- Color samples from the manufacturer's standard line (or custom color samples if specified) to be used in selecting or approving colors for the project.
- Field samples and mock-ups constructed on the project site establish standards by which the ensuring work can be judged. Includes assemblies or portions of assemblies that are to be incorporated into the project and those which will be removed at conclusion of the work.

SD-05 Design Data

- Calculations, mix designs, analyses or other data pertaining to a part of work.
- Design submittals, design substantiation submittals and extensions of design submittals.

SD-06 Test Reports

- Report signed by authorized official of testing laboratory that a material, product or system identical to the material, product or system to be provided has been tested in accord with specified requirements. (Testing must

have been within three years of date of contract award for the project.)

- Report which includes findings of a test required to be performed by the Contractor on an actual portion of the work or prototype prepared for the project before shipment to job site.
- Report which includes finding of a test made at the job site or on sample taken from the job site, on portion of work during or after installation.
- Investigation reports.
- Daily checklists.
- Final acceptance test and operational test procedure.

SD-07 Certificates

- Statements printed on the manufacturer's letterhead and signed by responsible officials of manufacturer of product, system or material attesting that product, system or material meets specification requirements. Must be dated after award of project contract and clearly name the project.
- Document required of Contractor, or of a supplier, installer or subcontractor through Contractor, the purpose of which is to further quality of orderly progression of a portion of the work by documenting procedures, acceptability of methods or personnel qualifications.
- Confined space entry permits.
- Text of posted operating instructions.

SD-08 Manufacturer's Instructions

- Preprinted material describing installation of a product, system or material, including special notices and Material Safety Data sheets concerning impedances, hazards and safety precautions.

SD-09 Manufacturer's Field Reports

- Documentation of the testing and verification actions taken by manufacturer's representative to confirm compliance with manufacturer's standards or instructions.
- Factory test reports.

SD-10 Operation and Maintenance Data

- Data that is furnished by the manufacturer, or the system provider, to the equipment operating and maintenance personnel. This data is needed by operating and maintenance personnel for the safe and efficient operation, maintenance and repair of the item.

SD-11 Closeout Submittals

- Documentation to record compliance with technical or administrative requirements or to establish an administrative mechanism.

1.1.3. Approving Authority

Office authorized to approve submittal.

1.1.4. Work

As used in this section, on- and off-site construction required by contract documents, including labor necessary to produce submittals, construction, materials, products, equipment, and systems incorporated or to be incorporated in such construction.

1.2. NOT USED

1.3. SUBMITTAL CLASSIFICATION

Submittals are classified as follows:

1.3.1. Designer of Record Approved (DA)

1.3.1.1. Designer of Record (DOR) approval is required for all extensions of design, critical materials, equipment whose compatibility with the entire system must be checked, and other items as designated by the Contracting Officer. Within the terms of the Contract Clause entitled "Specifications and Drawings for Construction", they are considered to be "shop drawings". Provide the Government the number of copies designated hereinafter of all DOR approved submittals, after the DOR has taken appropriate action. The DOR shall ensure that submittals conform to the Solicitation, the Accepted Proposal and the completed design, however see below for those submittals proposing a deviation to the contract or a substitution of a material, system, or piece of equipment that was identified by manufacturer, brand name or model description in the accepted contract proposal.

1.3.1.2. The DOR shall ensure that the submittals comply with all applicable Buy American Act and Trade Agreement Act clauses in the contract. The DOR may confer with the Contracting Officer's Representative for advice and interpretation of those clauses, as necessary.

1.3.1.3. The Government may, but is not required to, review any or all DOR approved submittals for conformance to the solicitation, accepted proposal and the completed design. Except for submittals designated as deviating from the Solicitation, the Accepted Proposal or completed design, the Contractor may proceed with acquisition and installation upon DOR approval. Government Approved (GA)

1.3.2. Government Approved (GA)

Government approval is required for any item specifically designated as requiring Government approval in the Solicitation, for internal and external color finish selections and other items as designated by the Contracting Officer. Within the terms of the Contract Clause entitled "Specifications and Drawings for Construction," they are considered to be "shop drawings."

1.3.3. Government Conformance Review of Design (CR)

The Government will review all intermediate and final design submittals for conformance with the technical requirements of the solicitation. Section 01 33 16 **DESIGN AFTER AWARD** covers the design submittal and review process in detail. Review will be only for conformance with the applicable codes, standards and contract requirements. Design data includes the design documents described in Section 01 33 16 **DESIGN AFTER AWARD**. Generally, design submittals should be identified as SD-05 Design Data submittals.

1.3.4. Designer of Record Approved/Government Conformance Review (DA/CR)

1.3.4.1. Deviations to the Accepted Design. Designer of Record approval and the Government’s concurrence are required for any proposed deviation from the accepted design which still complies with the contract (the Solicitation and Accepted Proposal) before the Contractor is authorized to proceed with material acquisition or installation. Within the terms of the Contract Clause entitled "Specifications and Drawings for Construction", they are considered to be "shop drawings.” If necessary to facilitate the project schedule, the Contractor and the DOR may discuss a submittal proposing a deviation with the Contracting Officer's Representative prior to officially submitting it to the Government. However, the Government reserves the right to review the submittal before providing an opinion, if it deems it necessary. In any case, the Government will not formally agree to or provide a preliminary opinion on any deviation without the DOR's approval or recommended approval. The Government reserves the right to non-concur with any deviation from the design, which may impact furniture, furnishings, equipment selections or operations decisions that were made, based on the reviewed and concurred design.

1.3.4.2. Substitutions. Unless prohibited or provided for otherwise elsewhere in the Contract, where the accepted contract proposal named products, systems, materials or equipment by manufacturer, brand name and/or by model number or other specific identification, and the Contractor desires to substitute manufacturer or model after award, submit a requested substitution for Government concurrence. Include substantiation, identifying information and the DOR’s approval, as meeting the contract requirements and that it is equal in function, performance, quality and salient features to that in the accepted contract proposal.

1.3.5. Designer of Record Approved/Government Approved (DA/GA)

Any proposed deviation to the solicitation and/or the accepted proposal constitutes a change to the contract. In addition to the above stated requirements for proposed deviations to the accepted design, both Designer of Record and Government Approval and, where applicable, a contract modification are required before the Contractor is

authorized to proceed with material acquisition or installation for any proposed deviation to the contract. Within the terms of the Contract Clause entitled "Specifications and Drawings for Construction", they are considered to be "shop drawings". The Government reserves the right to accept or reject any such proposed deviation at its discretion.

1.3.6. Information Only

All submittals not requiring Designer of Record or Government approval will be for information only. Provide the Government “For Information Only” copies of all submittals not requiring Government approval or concurrence, after the Designer of Record has taken the appropriate action.

1.4. APPROVED OR CONCURRED WITH SUBMITTALS

Do not construe the Contracting Officer's approval of or concurrence with submittals as a complete check, but only that design, general method of construction, materials, detailing and other information appear to meet the Solicitation and Accepted Proposal. Approval or concurrence will not relieve the Contractor of the responsibility for any error which may exist, as the Contractor under the Contractor Quality Control (CQC) requirements of this contract is responsible for design, dimensions, all design extensions, such as the design of adequate connections and details, etc., and the satisfactory construction of all work. The Government won’t consider re-submittals for the purpose of substituting previously approved materials or equipment unless accompanied by an explanation of why a substitution is necessary.

1.5. DISAPPROVED SUBMITTALS

Make all corrections required by the Contracting Officer, obtain the Designer of Record's approval when applicable, and promptly furnish a corrected submittal in the form and number of copies specified for the initial submittal. Resubmit any "information only" submittal found to contain errors or unapproved deviations from the Solicitation or Accepted Proposal as one requiring "approval" action, requiring both Designer of Record and Government approval. If the Contractor considers any correction indicated on the submittals to constitute a change to the contract, provide prompt notice in accordance with the Contract Clause "Changes" to the Contracting Officer.

1.6. WITHHOLDING OF PAYMENT

No payment for materials incorporated in the work will be made if all required Designer of Record or required Government approvals have not been obtained. No payment will be made for any materials incorporated into the work for any conformance review submittals or information only submittals found to contain errors or deviations from the Solicitation or Accepted Proposal.

1.7. GENERAL

Make submittals as required by the specifications. The Contracting Officer may request submittals in addition to those specified when deemed necessary to adequately describe the work covered in the respective sections. Units of weights and measures used on all submittals shall be the same as those used in the contract drawings. Each submittal shall be complete and in sufficient detail to allow ready determination of compliance with contract requirements. Prior to submittal, the Contractor’s Quality Control (CQC) System Manager and the Designer of Record, if applicable, shall check, approve, sign, and stamp all items, indicating action taken. Clearly idenify proposed deviations from the contract requirements. Include items such as: Contractor's, manufacturer's, or fabricator's drawings; descriptive literature including (but not limited to) catalog cuts, diagrams, operating charts or curves; test reports; test cylinders; samples; O&M manuals (including parts list); certifications; warranties; and other such required submittals. Schedule and make submittals requiring Government approval prior to the acquisition of the material or equipment covered thereby. Pick up and dispose of samples remaining upon completion of the work in accordance with manufacturer's Material Safety Data Sheets (MSDS) and in compliance with existing laws and regulations.

1.8. SUBMITTAL REGISTER (GA)

Develop a complete list of submittals, including each separate design package submittal. Submit the initial submittal register within 15 days after Notice to Proceed, including, as a minimum, the design packages and other initial submittals required elsewhere in the contract. The Designer of Record shall identify required submittals in the

specifications, and use the list to prepare the Submittal Register, utilizing the government-provided software, QCS (see Section 01 45 01.10), to create the ENG Form 4288. Appendix Ris a preliminary submittal register input form for use with the Quality Management System and the Resident Office Management System (QCS and RMS). The Government will provide the Contractor the actual Excel Spreadsheet version of this sample input form after award to modify and to use for input into QCS. The Excel Spreadsheet is not totally inputable into QCS, so additional keystroke input will be necessary. The sample input form is not all-inclusive. In addition, additional submittals may be required by other parts of the contract. After award, the parties will meet to discuss contract specific (or task order specific for a task order contract) distribution for the submittals all-inclusive and additional submittals may be required by other parts of the contract. Develop and complete the submittal register as the design is completed. Submit it to the Contracting Officer with the un-reviewed final design package submission or as soon as the design specifications are completed, if before the final design submission. When applicable, if the Contractor elects to fast track design and construction, using multiple design package submissions,update the submittal register to reflect the submittals associated with each design submission, clearly denoting all revisions to the previous submission. The submittal register serves as a scheduling document for submittals and for control of submittal actions throughout the contract period. Coordinate the submit dates and need dates used in the submittal register with dates in the Contractor prepared progress schedule. Submit montly updates to the submittal register showing the Contractor action codes and actual dates with Government action codes and actual dates or until all submittals have been satisfactorily completed. Revise and submit the submittal register when revising the progress schedule.

1.9. SCHEDULING

Schedule submittals covering component items forming a system or items that are interrelated to be coordinated and submitted concurrently. Schedule certifications to be submitted with the pertinent drawings. Allow adequate time (a minimum of 15 calendar days exclusive of mailing time) and show on the register for those items requiring Government approval or concurrence. No delay damages or time extensions will be allowed for time lost in late submittals by the Contractor.

1.10. TRANSMITTAL FORM (ENG FORM 4025)

Use the transmittal form (ENG Form 4025) for submitting submittals in accordance with the instructions on the reverse side of the form. These forms will be furnished to the Contractor or are included in the QCS software if the Contractor is required to use QCS for this contract. Use a separate transmittal form for each specification section Complete this form by filling out all the heading blank spaces and identify each item submitted. Exercise special care to ensure proper listing of the specification paragraph and/or sheet number of the contract drawings pertinent to the data submitted for each item.

1.11. SUBMITTAL PROCEDURES

Make submittals as follows:

1.11.1. Procedures

The Government will further discuss detailed submittal procedures with the Contractor at the Post-Award Conference.

1.11.2. Deviations

For submittals which include proposed deviations requested by the Contractor, check the column "variation" of ENG Form 4025. Set forth in writing the reason for any deviations and annotate such deviations on the submittal. The Government reserves the right to rescind inadvertent approval of submittals containing unnoted deviations.

1.12. CONTROL OF SUBMITTALS

Carefully control his procurement operations to ensure that each individual submittal is made on or before the scheduled submittal date shown on the approved "Submittal Register."

1.13. GOVERNMENT APPROVED OR CONCURRED WITH SUBMITTALS

Upon completion of review of submittals requiring Government approval or concurrence, the Government will stamp and date the submittals as approved or concurred.. The Government will retain zero(0) copies of the submittal and return zero(0) copy(ies) of the submittal.

1.14. INFORMATION ONLY SUBMITTALS

Normally submittals for information only will not be returned. Approval of the Contracting Officer is not required on information only submittals. The Government reserves the right to require the Contractor to resubmit any item found not to comply with the contract. This does not relieve the Contractor from the obligation to furnish material conforming to the plans and specifications; will not prevent the Contracting Officer from requiring removal and replacement of nonconforming material incorporated in the work; and does not relieve the Contractor of the requirement to furnish samples for testing by the Government laboratory or for check testing by the Government in those instances where the technical specifications so prescribe. The Government will retain zero(0) copies of information only submittals.

1.15. STAMPS

Use stamps similar to the following on the submittal data to certify that the submittal meets contract requirements:

CONTRACTOR

(FIRM NAME)

_____ Approved

_____ Approved with corrections as noted on submittal data and/or attached sheet(s)

Signature: _____

Title: _____

Date: _____

For design-build construction, both the Contractor Quality Control System Manager and the Designer of Record shall stamp and sign to certify that the submittal meets contract requirements.

SECTION 01 33 16
DESIGN AFTER AWARD

1.0 GENERAL INFORMATION

1.1. INTRODUCTION

1.2. DESIGNER OF RECORD

2.0 PRODUCTS (Not Applicable)

3.0 EXECUTION

3.1. PRE-WORK ACTIVIES & CONFERENCES

3.1.1. Design Quality Control Plan

3.1.2. Post Award Conference

3.1.3. Partnering & Project Progress Processes

3.1.4. Initial Design Conference

3.1.5. Pre-Construction Conference

3.2. STAGES OF DESIGN SUBMITTALS AND OVER THE SHOULDER PROGRESS REVIEWS

3.2.1. Site/Utilities

3.2.2. Interim Design Submittals

3.2.3. Over-the-Shoulder Progress Reviews

3.2.4. Final Design Submissions

3.2.5. Design Complete Submittals

3.2.6. Holiday Periods for Government Review or Actions

3.2.7. Late Submittals and Reviews

3.3. DESIGN CONFIGURATION MANAGEMENT

3.3.1. Procedures

3.3.2. Tracking Design Review Comments

3.3.3. Design and Code Checklists

3.4. INTERIM DESIGN REVIEWS AND CONFERENCES

3.4.1. General

3.4.2. Procedures

3.4.3. Conference Documentation

3.5. INTERIM DESIGN REQUIREMENTS

3.5.1. Drawings

3.5.2. Design Analyses

3.5.3. Geotechnical Investigations and Reports

3.5.4. LEED Documentation

3.5.5. Energy Conservation

3.5.6. Specifications

3.5.7. Building Rendering

3.5.8. Interim Building Design Contents

3.6. FINAL DESIGN REVIEWS AND CONFERENCES

3.7. FINAL DESIGN REQUIREMENTS

3.7.1. Drawings

3.7.2. Design Analysis

3.7.3. Specifications

3.7.4. Submittal Register

3.7.5. Preparation of DD Form 1354 (Transfer of Real Property)

3.7.6. Acceptance and Release for Construction

3.8. DESIGN COMPLETE CONSTRUCTION DOCUMENT REQUIREMENTS

3.9. SUBMITTAL DISTRIBUTION, MEDIA AND QUANTITIES

3.9.1. Submittal Distribution and Quantities

3.9.2. Web based Design Submittals

3.9.3. Mailing of Design Submittals

3.10. AS-BUILT DOCUMENTS

ATTACHMENT A STRUCTURAL INTERIOR DESIGN (SID) REQUIREMENTS

ATTACHMENT B FURNITURE, FIXTURES AND EQUIPMENT REQUIREMENTS

ATTACHMENT C TRACKING COMMENTS IN DRCHECKS

ATTACHMENT D SAMPLE FIRE PROTECTION AND LIFE SAFETY CODE REVIEW

ATTACHMENT E LEED SUBMITTALS

ATTACHMENT F BUILDING INFORMATION MODELING REQUIREMENTS

ATTACHMENT G DESIGN SUBMITTAL DIRECTORY AND SUBDIRECTORY FILE ARRANGEMENT

1.0 GENERAL INFORMATION

1.1. INTRODUCTION

1.1.1. The information contained in this section applies to the design required after award. After award, the Contractor will develop the accepted proposal into the completed design, as described herein.

1.1.2. The Contractor may elect to fast track the design and construction that is, proceed with construction of parts of the sitework and facilities prior to completion of the overall design. To facilitate fast tracking, the Contractor may elect to divide the design into no more than ten (10) design packages per major facility type and no more than three (3) design packages for site and associated work. Designate how it will package the design, consistent with its overall plan for permitting (where applicable) and construction of the project. See Sections 01 33 00 SUBMITTAL PROCEDURES and 01 32 01.00 10 PROJECT SCHEDULE for requirements for identifying and scheduling the design packaging plan in the submittal register and project schedule. See also Sections 01 10 00 STATEMENT OF WORK and 01 57 20.00 10 ENVIRONMENTAL PROTECTION for any specified permit requirements. If early procurement of long-lead item construction materials or installed equipment, prior to completion of the associated design package, is necessary to facilitate the project schedule, also identify those long-lead items and how it will assure design integrity of the associated design package to meet the contract requirements (The Contract consists of the Solicitation requirements and the accepted proposal). Once the Government is satisfied that the long-lead items meet the contract requirements, the Contracting Officer will allow the Contractor to procure the items at its own risk.

1.1.3. The Contractor may proceed with the construction work included in a separate design package after the Government has reviewed the final (100%) design submission for that package, review comments have been addressed and resolved to the Government's satisfaction and the Contracting Officer (or the Administrative Contracting Officer) has agreed that the design package may be released for construction.

1.1.4. INTEGRATED DESIGN. To the maximum extent permitted for this project, use a collaborative, integrated design process for all stages of project delivery with comprehensive performance goals for siting, energy, water, materials and indoor environmental quality and ensures incorporation of these goals. Consider all stages of the building lifecycle, including deconstruction.

1.2. DESIGNER OF RECORD

Identify, for approval, the Designer of Record (“DOR”) that will be responsible for each area of design. One DOR may be responsible for more than one area. Listed, Professional Registered, DOR(s) shall account for all areas of design disciplines shall be accounted for by a listed. The DOR’s shall stamp, sign, and date each design drawing and other design deliverables under their responsible discipline at each design submittal stage (see contract clause Registration of Designers). If the deliverables are not ready for release for construction, identify them as "preliminary" or "not for release for construction" or by using some other appropriate designation. The DOR(s) shall also be responsible for maintaining the integrity of the design and for compliance with the contract requirements through construction and documentation of the as-built condition by coordination, review and approval of extensions of design, material, equipment and other construction submittals, review and approval or disapproval of requested deviations to the accepted design or to the contract, coordination with the Government of the above activities, and by performing other typical professional designer responsibilities.

2.0 PRODUCTS (Not Applicable)

3.0 EXECUTION

3.1. PRE-WORK ACTIVITIES & CONFERENCES

3.1.1. Design Quality Control Plan

Submit for Government acceptance, a Design Quality Control Plan in accordance with Section 01 45 04.00 10 CONTRACTOR QUALITY CONTROL before design may proceed.

3.1.2. Post Award Conference

3.1.2.1. The government will conduct a post award contract administration conference at the project site, as soon as possible after contract award. This will be coordinated with issuance of the contract notice to proceed (NTP). The Contractor and major sub-contractor representatives shall participate. All designers need not attend this first meeting. Government representatives will include COE project delivery team members, facility users, facility command representatives, and installation representatives. The Government will provide an agenda, meeting goals, meeting place, and meeting time to participants prior to the meeting.

3.1.2.2. The post award conference shall include determination and introduction of contact persons, their authorities, contract administration requirements, discussion of expected project progress processes, and coordination of subsequent meetings for quality control (see Section 01 45 04.00 10 CONTRACTOR QUALITY CONTROL), Partnering (see below and SCR: Partnering), and the initial design conference (see below).

3.1.2.3. The government will introduce COE project delivery team members, facility users, facility command representatives, and installation representatives. The DB Contractor shall introduce major subcontractors, and other needed staff. Expectations and duties of each person shall be defined for all participants. A meeting roster shall be developed and distributed by the government with complete contact information including name, office, project role, phone, mailing and physical address, and email address.

3.1.3. Partnering & Project Progress Processes

3.1.3.1. The initial Partnering conference may be scheduled and conducted at any time with or following the post award conference. The Government proposes to form a partnership with the DB Contractor to develop a cohesive building team. This partnership will involve the COE project delivery team members, facility users, facility command representatives, installation representatives, Designers of Record, major subcontractors, contractor quality control staff, and contractor construction management staff. This partnership will strive to develop a cooperative management team drawing on the strengths of each team member in an effort to achieve a quality project within budget and on schedule. This partnership will be bilateral in membership and participation will be totally voluntary. All costs, excluding labor and travel expenses, shall be shared equally between the Government and the Contractor. The Contractor and Government shall be responsible for their own labor and travel costs. Normally, partnering meetings will be held at or in the vicinity of the project installation.

3.1.3.2. As part of the partnering process, the Government and Contractor shall develop, establish, and agree to comprehensive design development processes including conduct of conferences, expectations of design development at conferences, fast-tracking, design acceptance, Structural Interior Design (SID)/ Furniture, Fixtures & Equipment (FF&E) design approval, project closeout, etc. The government will explain contract requirements and the DB Contractor shall review their proposed project schedule and suggest ways to streamline processes.

3.1.4. Initial Design Conference

The initial design conference may be scheduled and conducted at the project installation any time after the post award conference, although it is recommended that the partnering process be initiated with or before the initial design conference. Any design work conducted after award and prior to this conference should be limited to site and is discouraged for other items. All Designers of Record shall participate in the conference. The purpose of the meeting is to introduce everyone and to make sure any needs the contractor has are assigned and due dates established as well as who will get the information. See also Attachment F, BUILDING INFORMATION MODELING REQUIREMENTS for discussion concerning the BIM Implementation Plan demonstration at this meeting. The DB Contractor shall conduct the initial design conference.

3.1.5. Pre-Construction Conference

Before starting construction activities, the Contractor and Government will jointly conduct a pre-construction administrative conference to discuss any outstanding requirements and to review local installation requirements for start of construction. It is possible there will be multiple Pre-Construction Conferences based on the content of the design packages selected by the Contractor. The Government will provide minutes of this meeting to all participants.

3.2. STAGES OF DESIGN SUBMITTALS AND OVER THE SHOULDER PROGRESS REVIEWS

The stages of design submittals described below define Government expectations with respect to process and content. The Contractor shall determine how to best plan and execute the design and review process for this project, within the parameters listed below. As a minimum, the Government expects to see at least one interim design submittal, at least one final design submittal before construction of a design package may proceed and at least one Design Complete submittal that documents the accepted design. The Contractor may sub-divide the design into separate packages for each stage of design and may proceed with construction of a package after the Government accepts the final design for that package. See discussion on waivers to submission of one or more intermediate design packages where the parties partner during the design process. See also Attachment F, BUILDING INFORMATION MODELING REQUIREMENTS for discussion concerning BIM and the various stages of design submittals and over-the-shoulder progress reviews**.**

3.2.1. Site/Utilities

To facilitate fast-track design-construction activities the contractor may submit a final (100%) site and utility design as the first design submittal or it may elect to submit interim and final site and utility design submittals as explained below. Following review, resolution, and incorporation of all Government comments, and submittal of a satisfactory set of site/utility design documents, after completing all other pre-construction requirements in this contract and after the pre-construction meeting, the Government will allow the Contractor to proceed with site development activities, including demolition where applicable, within the parameters set forth in the accepted design submittal. For the first site and utility design submission, whether an interim or final, the submittal review, comment, and resolution times from this specification apply, except that the Contractor shall allow the Government a 14 calendar day review period, exclusive of mailing time. No on-site construction activities shall begin prior to written Government clearance to proceed.

3.2.2. Interim Design Submittals

The Contractor may submit either a single interim design for review, representing a complete package with all design disciplines, or split the interim design into smaller, individual design packages as it deems necessary for fast-track construction purposes. As required in Section 01 32 01.00 10 PROJECT SCHEDULE, the Contractor shall schedule its design and construction packaging plan to meet the contract completion period. This submission is the Government's primary opportunity to review the design for conformance to the solicitation and to the accepted contract proposal and to the Building Codes at a point where required revisions may be still made, while minimizing lost design effort to keep the design on track with the contract requirements. The requirements for the interim design review submittals and review conferences are described hereinafter. This is not necessarily a hold point for the design process; the Contractor may designate the interim design submittal(s) as a snapshot and proceed with design development at its own risk. See below for a waiver, where the parties establish an effective over-the-shoulder progress review procedure through the partnering process that would eliminate the need for or expedite a formal intermediate design review on one or more individual design packages.

3.2.3. Over-the-Shoulder Progress Reviews

To facilitate a streamlined design-build process, the Government and the Contractor may agree to one-on-one reviewer or small group reviews, electronically, on-line (if available within the Contractor's standard design practices) or at the Contractor's design offices or other agreed location, when practicable to the parties. The Government and Contractor will coordinate such reviews to minimize or eliminate disruptions to the design process. Any data required for these reviews shall normally be provided in electronic format, rather than in hard copy. If the Government and Contractor establish and implement an effective, mutually agreeable partnering procedure for regular (e.g., weekly) over-the shoulder review procedures that allow the Government reviewers the opportunity to keep fully informed of the progress, contents, design intent, design documentation, etc. of the design package, the Government will agree to waive or to expedite the formal intermediate design review period for that package. The Contractor shall still be required to submit the required intermediate design documentation, however the parties may agree to how that material will be provided, in lieu of a formal consolidated submission of the package. It should be noted that Government funding is extremely limited for non-local travel by design reviewers, so the maximum use of virtual teaming methods must be used. Some possible examples include electronic file sharing, interactive software with on-line or telephonic conferencing, televideo conferencing, etc. The Government must still perform its Code and Contract conformance reviews, so the Contractor is encouraged to partner with the reviewers to find ways to facilitate this process and to facilitate meeting or bettering the design-build schedule. The Contractor shall maintain a fully functional configuration management system as described herein to track design revisions, regardless of whether or not there is a need for a formal intermediate design review. The formal intermediate

review procedures shall form the contractual basis for the official schedule, in the event that the partnering process determines that the formal intermediate review process to be best suited for efficient project execution. However, the Government pledges to support and promote the partnering process to work with the Contractor to find ways to better the design schedule.

3.2.4. Final Design Submissions

This submittal is required for each design package prior to Government acceptance of that design package for construction. The requirements for the final design submittal review conferences and the Government's acceptance for start of construction are described herein after.

3.2.5. Design Complete Submittals

After the final design submission and review conference for a design package, revise the design package to incorporate the comments generated and resolved in the final review conferences, perform and document a back-check review and submit the final, design complete documents, which shall represent released for construction documents. The requirements for the design complete submittals are described hereinafter.

3.2.6. Holiday Periods for Government Review or Actions

Do not schedule meetings, Government reviews or responses during the last two weeks of December or other designated Government Holidays (including Friday after Thanksgiving). Exclude such dates and periods from any durations specified herein for Government actions.

3.2.7. Late Submittals and Reviews

If the Contractor cannot meet its scheduled submittal date for a design package, it must revise the proposed submittal date and notify the government in writing, at least one (1) week prior to the submittal, in order to accommodate the Government reviewers' other scheduled activities. If a design submittal is over one (1) day late in accordance with the latest revised design schedule, or if notification of a proposed design schedule change is less than seven (7) days from the anticipated design submission receipt date, the Government review period may be extended up to seven (7) days due to reviewers' schedule conflicts. If the Government is late in meeting its review commitment and the delay increases the Contractor's cost or delays completion of the project, the Suspension of Work and Defaults clauses provide the respective remedy or relief for the delay.

3.3. DESIGN CONFIGURATION MANAGEMENT

3.3.1. Procedures

Develop and maintain effective, acceptable design configuration management (DCM) procedures to control and track all revisions to the design documents after the Interim Design Submission through submission of the As-Built documents. During the design process, this will facilitate and help streamline the design and review schedule. After the final design is accepted, this process provides control of and documents revisions to the accepted design (See Special Contract Requirement: Deviating From the Accepted Design). The system shall include appropriate authorities and concurrences to authorize revisions, including documentation as to why the revision must be made. The DCM data shall be available to the Government reviewers at all times. The Contractor may use its own internal system with interactive Government concurrences, where necessary or may use the Government's "DrChecks Design Review and Checking System" (see below and Attachment C).

3.3.2. Tracking Design Review Comments

Although the Contractor may use its own internal system for overall design configuration management, the Government and the Contractor shall use the DrChecks Design Review and Checking System to initiate, respond to, resolve and track Government design compliance review comments. This system may be useful for other data which needs to be interactive or otherwise available for shared use and retrieval. See Attachment C for details on how to establish an account and set-up the DrChecks system for use on the project.

3.3.3. Design and Code Checklists

Develop and complete various discipline-specific checklists to be used during the design and quality control of each submittal. Submit these completed checklists with each design submittal, as applicable, as part of the project documentation. See Section 01 45 04.00 10 Contractor Quality Control, Attachment D for a Sample Fire Protection and Life Safety Code review checklist and Attachment E for LEED SUBMITTALS.

3.4. INTERIM DESIGN REVIEWS AND CONFERENCES

3.4.1. General

At least one interim design submittal, review and review conference is required for each design package (except that, per paragraph 3.2.1, the Contractor may skip the interim design submission and proceed directly to final design on the sitework and utilities package). The DB Contractor may include additional interim design conferences or over-the-shoulder reviews, as needed, to assure continued government concurrence with the design work. Include the interim submittal review periods and conferences in the project schedule and indicate what part of the design work is at what percentage of completion. The required interim design conferences shall be held when interim design requirements are reached as described below. See also Paragraph: **Over-the-Shoulder Progress Reviews** for a waiver to the formal interim design review.

3.4.2. Procedures

After receipt of an Interim Design submission, allow the Government fourteen (14) calendar days after receipt of the submission to review and comment on the interim design submittal. For smaller design packages, especially those that involve only one or a few separate design disciplines, the parties may agree on a shorter review period or alternative review methods (e.g., over-the–shoulder or electronic file sharing), through the partnering process. For each interim design review submittal, the COR will furnish, to the Contractor, a single consolidated, validated listing of all comments from the various design sections and from other concerned agencies involved in the review process using the DrChecks Design Review and Checking System. The review will be for conformance with the technical requirements of the solicitation and the Contractor's RFP proposal. If the Contractor disagrees technically with any comment or comments and does not intend to comply with the comment, he/she must clearly outline, with ample justification, the reasons for noncompliance within five (5) days after receipt of these comments in order that the comment can be resolved. Furnish disposition of all comments, in writing, through DrChecks. The Contractor is cautioned that if it believes the action required by any comment exceeds the requirements of this contract, that it should take no action and notify the COR in writing immediately. The Interim Review conference will be held for each design submittal at the installation. Bring the personnel that developed the design submittal to the review conference. The conference will take place the week after the receipt of the comments by the Contractor. For smaller fast-track packages that involve only a few reviewers, the parties may agree to alternative conferencing methods, such as teleconferencing, or televideo, where available, as determined through Partnering.

3.4.3. Conference Documentation

3.4.3.1. In order to facilitate and accelerate the Government code and contract conformance reviews, identify, track resolution of and maintain all comments and action items generated during the design process and make this available to the designers and reviewers prior to the Interim and subsequent design reviews.

3.4.3.2. The DB Contractor shall prepare meeting minutes and enter final resolution of all comments into DrChecks. Copies of comments, annotated with comment action agreed on, will be made available to all parties before the conference adjourns. Unresolved problems will be resolved by immediate follow-on action at the end of conferences. Incorporate valid comments. The Government reserves the right to reject design document submittals if comments are significant. Participants shall determine if any comments are critical enough to require further design development prior to government concurrence. Participants shall also determine how to proceed in order to obtain government concurrence with the design work presented.

3.5. INTERIM DESIGN REQUIREMENTS

Interim design deliverables shall include drawings, specifications, and design analysis for the part of design that the Contractor considers ready for review.

3.5.1. Drawings

Include comments from any previous design conferences incorporated into the documents to provide an interim design for the “part” submitted.

3.5.2. Design Analyses

3.5.2.1. The designers of record shall prepare and present design analyses with calculations necessary to substantiate and support all design documents submitted. Address design substantiation required by the applicable codes and references and pay particular attention to the following listed items:

3.5.2.2. For parts including sitework, include site specific civil calculations.

3.5.2.3. For parts including structural work, include structural calculations.

(a) Identify all loads to be used for design.

(b) Describe the method of providing lateral stability for the structural system to meet seismic and wind load requirements. Include sufficient calculations to verify the adequacy of the method.

(c) Provide calculations for all principal roof, floor, and foundation members and bracing and secondary members.

(d) Provide complete seismic analyses for all building structural, mechanical, electrical, architectural, and building features as dictated by the seismic zone for which the facility is being constructed.

(e) Computer generated calculations must identify the program name, source, and version. Provide input data, including loads, loading diagrams, node diagrams, and adequate documentation to illustrate the design. The schematic models used for input must show, as a minimum, nodes/joints, element/members, materials/properties, and all loadings, induced settlements/deflections, etc., and a list of load combinations. Include an output listing for maximum/minimum stresses/forces and deflections for each element and the reactions for each loading case and combination.

(f) See also the Security (Anti-Terrorism) requirements below for members subject to Anti-Terrorist Force Protection (ATFP) and Progressive Collapse requirements.

(g) Fully coordinate and integrate the overall structural design between two different or interfacing construction types, such as modular and stick-built or multistory, stacked modular construction. Provide substantiation of structural, consolidation/settlement analysis, etc., as applicable, through the interfaces.

3.5.2.4. For Security (Anti-Terrorism): Provide a design narrative and calculations where applicable, demonstrating compliance with each of the 22 standards in UFC 4-010-01, which includes Design of Buildings to Resist Progressive Collapse (use the most recent version of UFC 4-023-03, regardless of references to any specific version in UFC 4-010-01). Where sufficient standoff distance is not being provided, show calculations for blast resistance of the structural system and building envelope. Show complete calculations for members subjected to ATFP loads, e.g., support members of glazed items (jambs, headers, sills) connections of windows to support members and connections of support members to the rest of the structure. For 3 story and higher buildings, provide calculations to demonstrate compliance with progressive collapse requirements.

3.5.2.5. For parts including architectural work, include building floor area analysis.

3.5.2.6. For parts including mechanical work, include HVAC analysis and calculations. Include complete design calculations for mechanical systems. Include computations for sizing equipment, compressed air systems, air duct design, and U-factors for ceilings, roofs and exterior walls and floors. Contractor shall employ commercially available energy analysis techniques to determine the energy performance of all passive systems and features. Use of hourly energy load computer simulation is required (see paragraph 3.5.5.2 for list of acceptable software). Based on the results of calculations, provide a complete list of the materials and equipment proposed with the manufacturer's published cataloged product installation specifications and roughing-in data.

3.5.2.7. For parts including life safety, include building code analysis and sprinkler and other suppression systems. Notwithstanding the requirements of the Codes, address the following:

(a) A registered fire protection engineer (FPE) must perform all fire protection analyses. Provide the fire protection engineer’s qualifications. See Section 01 10 00, paragraph 5 for qualifications.

(b) Provide all references used in the design including Government design documents and industry standards used to generate the fire protection analysis.

(c) Provide classification of each building in accordance with fire zone, building floor areas and height and number of stories.

(d) Provide discussion and description of required fire protection requirements including extinguishing equipment, detection equipment, alarm equipment and water supply. Alarm and detection equipment shall interface to requirements of Electronic Systems.

(e) Provide hydraulic calculations based on water flow test for each sprinkler system to insure that flow and pressure requirements can be met with current water supply. Include copies of Contractor's water flow testing done to certify the available water source.

3.5.2.8. For parts including plumbing systems:

(a) List all references used in the design.

(b) Provide justification and brief description of the types of plumbing fixtures, piping materials and equipment proposed for use.

(c) Detail calculations for systems such as sizing of domestic hot water heater and piping; natural gas piping; LP gas piping and tanks, fuel oil piping and tanks, etc., as applicable.

(d) When the geotechnical report indicates expansive soils are present, indicate in the first piping design submittal how piping systems will be protected against damage or backfall/backflow due to soil heave (from penetration of slab to the 5 foot building line).

3.5.2.9. For elevator systems:

(a) List all criteria codes, documents and design conditions used.

(b) List any required permits and registrations for construction of items of special mechanical systems and equipment.

3.5.2.10. For parts including electrical work, include lighting calculations to determine maintained foot-candle levels, electrical load analysis and calculations, electrical short circuit and protective device coordination analysis and calculations and arc fault calculations.

3.5.2.11. For parts including telecommunications voice/data (including SIPRNET, where applicable), include analysis for determining the number and placement of outlets

3.5.2.12. For Cathodic Protection Systems, provide the following stamped report by the licensed corrosion engineer or NACE specialist with the first design submission. The designer must be qualified to engage in the practice of corrosion control of buried or submerged metallic surfaces. He/she must be accredited or certified by the National Association of Corrosion Engineers (NACE) as a NACE Accredited Corrosion Specialist or a NACE certified Cathodic Protection Specialist, or must be a registered professional engineer with a minimum of five years experience in corrosion control and cathodic protection, Clearly describe structures, systems or components in soil or water to be protected. Describe methods proposed for protection of each.

3.5.3. Geotechnical Investigations and Reports:

3.5.3.1. The contractor’s licensed geotechnical engineer shall prepare a final geotechnical evaluation report, to be submitted along with the first foundation design submittal. Make this information available as early as possible during the over-the-shoulder progress review process. Summarize the subsurface conditions and provide recommendations for the design of appropriate utilities, foundations, floor slabs, retaining walls, embankments, and pavements. Include compaction requirements for fill and backfill under buildings, sidewalks, other structures and open areas. Recommend foundation systems to be used, allowable bearing pressures for footings, lateral load resistance capacities for foundation systems, elevations for footings, grade beams, slabs, etc. Provide an assessment of post-construction settlement potential including total and differential. Provide recommendations regarding lateral earth pressures (active, at-rest, passive) to be used in the design of retaining walls. Include the recommended spectral accelerations and Site Class for seismic design along with an evaluation of any seismic hazards and recommendations for mitigation, if required. Include calculations to support the recommendations for bearing capacity, settlement, and pavement sections. Include supporting documentation for all recommended

design parameters such as Site Class, shear strength, earth pressure coefficients, friction factors, subgrade modulus, California Bearing Ratio (CBR), etc. Provide earthwork recommendations, expected frost penetration, expected groundwater levels, recommendations for dewatering and groundwater control and the possible presence of any surface or subsurface features that may affect the construction of the project such as sinkholes, boulders, shallow rock, old fill, old structures, soft areas, or unusual soil conditions. Include pH tests, salinity tests, resistivity measurements, etc., required to design corrosion control and grounding systems. Include the raw field data. Arrange a meeting with the Government subsequent to completion and evaluation of the site specific geotechnical exploration to outline any differences encountered that are inconsistent with the Government provided preliminary soils information. Clearly outline differences which require changes in the foundation type, or pavement and earthwork requirements from that possible and contemplated using the Government furnished preliminary soils investigation, which result in a change to the design or construction. Any equitable adjustment is subject to the provisions of the contract's Differing Site Conditions Clause.

3.5.3.2. Vehicle Pavements: The Contractor's geotechnical report shall contain flexible and rigid pavement designs, as applicable for the project, including design CBR and modulus of subgrade reaction and the required compaction effort for subgrades and pavement layers. Provide Information on the types of base course materials available in the area and design strengths.

3.5.3.3. The Contractor and the professional geotechnical engineer consultant shall certify in writing that the design of the project has been developed consistent with the Contractor's final geotechnical report. The certification shall be stamped by the consulting professional geotechnical engineer and shall be submitted with the first design submission. If revisions are made to the initial design submission, a new certification shall be provided with the final design submission.

3.5.4. LEED Documentation:

Assign a LEED Accredited Professional, responsible to track LEED planning, performance and documentation for each LEED credit through construction closeout. Incorporate LEED credits in the plans, specifications and design analyses. Develop LEED supporting documentation as a separable portion of the Design Analysis and provide with each required design submittal. Include the LEED Project checklist for each non-exempt facility (one checklist may be provided for multiple facilities in accordance with the LEED-NC Application Guide for Multiple Buildings and On-Campus Building Projects and the LEED SUBMITTALS (Attachment E, herein) with each submittal. Final design submittal for each portion of the work must include all required design documentation relating to that portion of work (example - all site credit design documents with final site design). Submittal requirements are as indicated in Attachment E, LEED SUBMITTALS. Submit all documentation indicated on Attachment E as due at final design at final design submittal (for fast-track projects with multiple final design submittals, this shall be at the last scheduled final design submittal). All project documentation related to LEED shall conform to USGBC requirements for both content and format, including audit requirements and be separate from other design analyses. Maintain and update the LEED documentation throughout project progress to construction closeout and shall compile product data, receipts, calculations and other data necessary to substantiate and support all credits claimed. The Government may audit any or all individual credits. Audit documentation is not required to be submitted unless requested. These requirements apply to all projects. If the project requires the Contractor to obtain USGBC certification, the Contractor shall also be responsible for obtaining USGBC certification and shall provide written evidence of certification with the construction closeout LEED documentation submittal. Install the USGBC building plaque at the location indicated by the Government upon receipt. If Contractor obtains USGBC interim design review, submit the USGBC review to the Government within 30 days of receipt for information only.

3.5.4.1. LEED Documentation for Technology Solution Set. If the Solicitation provides a Prescriptive Technology Solution Set, use of the Technology Solution set has no effect on LEED documentation requirements. Provide all required LEED documentation, including energy analysis, in accordance with LEED requirements when using the Technology Solution Set.

3.5.5. Energy Conservation:

3.5.5.1. Refer to Section 01 10 00, Paragraph 5. Interim and Final Design submittals shall demonstrate that each building including the building envelope, HVAC systems, service water heating, power, and lighting systems meet the Mandatory Provisions and the Prescriptive Path requirements of ASHRAE 90.1. Use Compliance Documentation forms available from ASHRAE and included in the ASHRAE 90.1 User's Manual for this purpose. The Architectural Section of the Design Analysis shall include completed forms titled "Building Envelope

Compliance Documentation Parts I and II". The Heating Ventilating and Air Conditioning (HVAC) Section of the Design Analysis shall include a completed form titled "HVAC Simplified Approach Option - Part I" if this approach is allowed by the Standard. Otherwise, the HVAC Section of the Design Analysis shall include completed forms titled "HVAC Mandatory Provisions - Part II" and "HVAC Prescriptive Requirements - Part III". The Plumbing Section of the Design Analysis shall include a completed form titled "Service Water Heating Compliance Documentation". The Electrical Section of the Design Analysis shall include an explanatory statement on how the requirements of ASHRAE 90.1-2004 Chapter 8 Power were met. The Electrical Section of the Design Analysis shall also include a completed form titled "Lighting Compliance Documentation".

3.5.5.2. Interim and Final Design submittals which address energy consuming systems, (heating, cooling, service hot water, lighting, power, etc.) must also include calculations in a separate Energy Conservation Section of the Design Analysis which demonstrate and document (a) the baseline energy consumption for the facility or facilities under contract, that would meet the requirements of ANSI/ASHRAE/IESNA Standard 90.1 and (b) the energy consumption of the facility or facilities under contract utilizing the materials and methods required by this construction contract. Use the USGBC Energy and Atmosphere (EA) Credit 1 compliance template / form or an equivalently detailed form for documenting compliance with the energy reduction requirements. This template / form is titled PERFORMANCE RATING METHOD and is available when the project is registered for LEED. The calculation methodology used for this documentation and analysis shall follow the guidelines set forth in Appendix G of ASHRAE 90.1, with two exceptions: a) receptacle and process loads may be omitted from the calculation; and b) the definition of the terms in the formula for Percentage Improvement found in paragraph G1.2 are modified as follows: Baseline Building Performance shall mean the annual energy consumption calculated for a building design intended for use as a baseline for rating above standard design meeting the minimum requirements of the energy standard, and Proposed Building Performance shall mean annual energy consumption calculated for the proposed building design intended for construction. This calculation shall address all energy consuming systems in a single integrated methodology. Include laboratory fume hoods and kitchen ventilation loads in the energy calculation. They are not considered process loads. Individual calculations for heating, cooling, power, lighting, power, etc. systems will not be acceptable. The following building simulation software is acceptable for use in calculating building energy consumption: Hourly Analysis Program (HAP) by Carrier Corp., TRACE 700 by Trane Corp., DOE-2 by US Department of Energy, EnergyPlus by DOD/DOE.

3.5.6. Specifications

Specifications may be any one of the major, well known master guide specification sources (use only one source) such as MASTERSPEC from the American Institute of Architects, SPECTEXT from Construction Specification Institute or Unified Facility Guide Specifications (UFGS using MASTERFORMAT 2004 numbering system), etc. (including specifications from these sources). Manufacturers' product specifications, utilizing CSI's Manu-Spec, three part format may be used in conjunction with the selected specifications. The designers of record shall edit and expand the appropriate Specifications to insure that all project design requirements, current code requirements, and regulatory requirements are met. Specifications shall clearly identify, where appropriate, specific products chosen to meet the contract requirements (i.e., manufacturers' brand names and model numbers or similar product information).

3.5.7. Building Rendering

Present and provide a draft color computer, artist, or hand drawn rendering with the conceptual design submittal of the building exterior. Perspective renderings shall include a slightly overhead view of the entire building to encompass elevations and the roof configuration of the building. After Government review and acceptance, provide a final rendering, including the following:

Three (3) 18" x 24" color prints, framed and matted behind glass with project title underneath the print.

One (1) Image file (high resolution) in JPG format on CD for those in the submittal distribution list.

3.5.8. Interim Building Design Contents

The following list represents what the Government considers should be included in the overall completed design for a facility or project. It is not intended to limit the contractor from providing different or additional information as needed to support the design presented, including the require design analyses discussed above. As the Contractor develops individual design packages and submits them for Interim review, include as much of the applicable

information for an individual design package as is developed at the Interim design level for review purposes. These pieces shall be developed as the design progresses toward the design complete stage.

3.5.8.1. Lawn and Landscaping Irrigation System

3.5.8.2. Landscape, Planting and Turfing

3.5.8.3. Architectural

(a) Design Narrative

(b) Architectural Floor Plans, Typical Wall and Roof Sections, Elevations

(c) Finish schedule

(d) All required equipment

(e) Special graphics requirements

(f) Door and Window Schedules

(g) Hardware sets using BHMA designations

(h) Composite floor plan showing all pre-wired workstations

(i) Structural Interior Design (SID) package: See ATTACHMENT A for specific requirements

(j) Furniture, Fixtures & Equipment (FF&E) design package: See ATTACHMENT B for specific requirements

3.5.8.4. Structural Systems. Include:

(a) Drawings showing principal members for roof and floor framing plans as applicable

(b) Foundation plan showing main foundation elements where applicable

(c) Typical sections for roof, floor, and foundation conditions

3.5.8.5. Plumbing Systems

(a) Show locations and general arrangement of plumbing fixtures and major equipment

(b) Plan and isometric riser diagrams of all areas including hot water, cold water, waste and vent piping. Include natural gas (and meter as required), (natural gas and meter as required), (LP gas), (fuel oil) and other specialty systems as applicable.

(c) Include equipment and fixture connection schedules with descriptions, capacities, locations, connection sizes and other information as required

3.5.8.6. HVAC Systems

(a) Mechanical Floor Plans: The floor plans shall show all principle architectural features of the building which will affect the mechanical design. The floor plans shall also show the following:

(1) Room designations.

(2) Mechanical legend and applicable notes.

(3) Location and size of all ductwork and piping.

(4) Location and capacity of all terminal units (i.e., registers, diffusers, grilles, hydronic baseboards).

(5) Pre-Fabricated Paint Spray Booth (where applicable to project scope)

(6) Paint Preparation Area (where applicable to project scope)

(7) Exhaust fans and specialized exhaust systems.

(8) Thermostat location.

(9) Location of heating/cooling plant (i.e., boiler, chiller, cooling tower, etc).

(10) Location of all air handling equipment.

(11) Air balancing information.

(12) Flue size and location.

(13) Piping diagram for forced hot water system (if used).

(b) Equipment Schedule: Provide complete equipment schedules. Include:

(1) Capacity

(2) Electrical characteristics

(3) Efficiency (if applicable)

(4) Manufacturer's name

(5) Optional features to be provided

(6) Physical size

(7) Minimum maintenance clearances

(a) Details: Provide construction details, sections, elevations, etc., only where required for clarification of methods and materials of design.

(b) HVAC Controls: Submit complete HVAC controls equipment schedules, sequences of operation, wiring and logic diagrams, Input/Output Tables, equipment schedules, and all associated information. See the Statement of Work for additional specific requirements.

3.5.8.7. Fire Protection and Life Safety.

(a) Provide plan for each floor of each building that presents a compendium of the total fire protection features being incorporated into the design. Include the following types of information:

(1) The location and rating of any fire-resistive construction such as occupancy separations, area separations, exterior walls, shaft enclosures, corridors, stair enclosures, exit passageways, etc.

(2) The location and coverage of any fire detection systems

(3) The location and coverage of any fire suppression systems (sprinkler risers, standpipes, etc.)

(4) The location of any other major fire protection equipment

(5) Indicate any hazardous areas and their classification

(6) Schedule describing the internal systems with the following information: fire hazard and occupancy classifications, building construction type, GPM/square foot sprinkler density, area of operation and other as required

(b) Working plans and all other materials submitted shall meet NFPA 13 requirements, with respect to required minimum level of detail.

3.5.8.8. Elevators. Provide:

(a) Description of the proposed control system

(b) Description, approximate capacity and location of any special mechanical equipment for elevators.

3.5.8.9. Electrical Systems.

(a) Electrical Floor Plan(s): Show all principle architectural features of the building which will affect the electrical design. Show the following:

(1) Room designations.

(2) Electrical legend and applicable notes.

(3) Lighting fixtures, properly identified.

(4) Switches for control of lighting.

(5) Receptacles.

(6) Location and designation of panelboards. Clearly indicate type of mounting required (flush or surface) and reflect accordingly in specifications.

(7) Service entrance (conduit and main disconnect).

(8) Location, designation and rating of motors and/or equipment which requires electrical service. Show method of termination and/or connection to motors and/or equipment. Show necessary junction boxes, disconnects, controllers (approximate only), conduit stubs, and receptacles required to serve the motor and/or equipment.

(b) Building Riser Diagram(s) (from pad-mounted transformer to unit load center panelboard): Indicate the types and sizes of electrical equipment and wiring. Include grounding and metering requirements.

(c) Load Center Panelboard Schedule(s): Indicate the following information:

(1) Panelboard Characteristics (Panel Designation, Voltage, Phase, Wires, Main Breaker Rating and Mounting.

(2) Branch Circuit Designations.

(3) Load Designations.

(4) Circuit Breaker Characteristics. (Number of Poles, Trip Rating, AIC Rating)

(5) Branch Circuit Connected Loads (AMPS).

(6) Special Features

(d) Lighting Fixture Schedule(s): Indicate the following information:

(1) Fixture Designation.

(2) General Fixture Description.

(3) Number and Type of Lamp(s).

(4) Type of Mounting.

(5) Special Features.

(e) Details: Provide construction details, sections, elevations, etc. only where required for clarification of methods and materials of design.

3.5.8.10. Electronic Systems including the following responsibilities:

(a) Fire Detection and Alarm System. Design shall include layout drawings for all devices and a riser diagram showing the control panel, annunciator panel, all zones, radio transmitter and interfaces to other systems (HVAC, sprinkler, etc.)

(b) Fire Suppression System Control. Specify all components of the Fire Suppression (FS) System in the FS section of the specifications. Clearly describe how the system will operate and interact with other systems such as the fire alarm system. Include a riser diagram on the drawings showing principal components and interconnections with other systems. Include FS system components on drawing legend. Designate all components shown on floor plans “FS system components” (as opposed to “Fire Alarm components”). Show location of FS control panels, HVAC control devices, sensors, and 120V power panel connections on floor plans. Indicate zoning of areas by numbers (1, 2, 3) and detectors sub-zoned for cross zoning by letter designations (A and B). Differentiate between ceiling mounted and under floor detectors with distinct symbols and indicate sub-zone of each.

(c) Public Address System

(d) Special Grounding Systems. Completely reflect all design requirements in the specifications and drawings. Specifications shall require field tests (in the construction phase), witnessed by the Government, to determine the effectiveness of the grounding system. Include drawings showing existing construction, if any.

(e) Cathodic Protection.

(f) Intrusion Detection, Card Access System

(g) Central Control and Monitoring System

(h) Mass Notification System

(i) Electrical Power Distribution Systems

3.5.8.11. Separate detailed Telecommunications drawings for Information Systems including the following responsibilities:

(a) Telecommunications Cabling

(b) Supporting Infrastructure

(a) Outside Plant (OSP) Cabling - Campus or Site Plans - Exterior Pathways and Inter-Building Backbones

(a) Include a layout of the voice/data outlets (including voice only wall & pay phones) on telecommunication floor plan drawing, location of SIPRNET data outlets (where applicable), and a legend and symbol definition to indicate height above finished floor. Show size of conduit and cable type and size on Riser Diagram. Do not show conduit runs between backboard and outlets on the floor plans. Show underground distribution conduit and cable with sizing from point of presence to entrance facility of building.

(b) Layout of complete building per floor - Serving Zone Boundaries, Backbone Systems, and Horizontal Pathways including Serving Zones Drawings - Drop Locations and Cable ID's

(c) Communication Equipment Rooms - Plan Views - Tech and AMEP/Elevations - Racks and Walls. Elevations with a detailed look at all telecomm rooms. Indicate technology layout (racks, ladder-racks, etc.), mechanical/electrical layout, rack elevation and backboard elevation. They may also be an enlargement of a congested area of T1 or T2 series drawing.

3.6. FINAL DESIGN REVIEWS AND CONFERENCES

A final design review and review conference will be held upon completion of final design at the project installation, or – where equipment is available - by video teleconference or a combination thereof, for any design package to receive Government acceptance to allow release of the design package for construction. For smaller separate design packages, the parties may agree on alternative reviews and conferences (e.g., conference calls and electronic file sharing, etc.) through the Partnering process. Include the final design conference in the project schedule and shall indicate what part of the design work is at 100% completion. The final design conference will be held after the Government has had seven (7) calendar days after receipt of the submission to review the final design package and supporting data. For smaller packages, especially those involving only one or a few design disciplines the parties may agree on a shorter period.

3.7. FINAL DESIGN REQUIREMENTS

Final design deliverables for a design package shall consist of 100% complete drawings, specifications, submittal register and design analyses for Government review and acceptance. The 100% design submission shall consist of drawings, specifications, updated design analyses and any permits required by the contract for each package submitted. In order to expedite the final design review, prior to the conference, ensure that the design configuration management data and all review comment resolutions are up-to-date. Include the 100% SID and 100% FF&E binders for government approval. The Contractor shall have performed independent technical reviews (ITR's) and back-checks of previous comment resolutions, as required by Section 01 45 04.00 10 CONTRACTOR QUALITY CONTROL, including providing documentation thereof.

3.7.1. Drawings

3.7.1.1. Submit drawings complete with all contract requirements incorporated into the documents to provide a 100% design for each package submitted.

3.7.1.2. Prepare all drawings with the Computer-Aided Design and Drafting (CADD)/Computer-Aided Design (CAD) system, organized and easily referenced electronically, presenting complete construction information.

3.7.1.3. Drawings shall be complete. The Contractor is encouraged to utilize graphics, views, notes, and details which make the drawings easier to review or to construct but is also encouraged to keep such materials to those that are necessary.

3.7.1.4. Provide detail drawings that illustrate conformance with the contract. Include room finish schedules, corresponding color/finish/special items schedules, and exterior finish schedules that agree with the submitted SID binders.

3.7.1.5. The design documents shall be in compliance with the latest version of the A/E/C CADD Standard, available at https://cadbim.usace.army.mil/CAD. Use the approved vertical Corps of Engineers title blocks and borders on all drawings with the appropriate firm name included within the title block area.

3.7.1.6. CAD System and Building Information Modeling (BIM) (NOTE: If this is a Single Award or Multiple Award, Indefinite Delivery/Indefinite Quantity Contract, this information will be provided for each task order.)

All CAD files shall be fully compatible with MicroStation V8 or higher. Save all design CAD files as MicroStation V8 or higher files. All submitted BIM Models and associated Facility Data shall be fully compatible with Bentley BIM v8 with associated USACE Bentley BIM v8 Workspace file formats.

(a) CAD Data Final File Format: During the design development capture geo-referenced coordinates of all changes made to the existing site (facility footprint, utility line installations and alterations, roads, parking areas, etc) as a result of this contract. There is no mandatory methodology for how the geo-referenced coordinates will be captured, however, Engineering and Construction Bulletin No. 2006-15, Subject: Standardizing Computer Aided Design (CAD) and Geographic Information Systems (GIS) Deliverables for all Military Design and Construction Projects identifies the format for final as-built drawings and data sets to be delivered to the government. Close-out requirements at the as-built stage; require final geo-referenced GIS Database of the new facility along with all exterior modifications. The Government will incorporate this data set into the Installation's GIS Masterplan or Enterprise GIS System. See also, Section 01 78 02.00 10 Closeout Submittals.

(b) Electronic Drawing Files: In addition to the native CAD design files, provide separate electronic drawing files (in editable CAD format and Adobe Acrobat PDF version 7.0 or higher) for each project drawing.

(c) Each file (both CAD and PDF) shall represent one complete drawing from the drawing set, including the date, submittal phase, and border. Each drawing file shall be completely independent of any data in any other file, including fonts and shapes not included with the basic CAD software program utilized. Drawing files with external references or special fonts are not acceptable. All displayed graphic elements on all levels of the drawing files shall be part of the project drawing image. The drawing files shall not contain any graphic element that is not part of the drawing image.

(d) Deliver BIM Model and associated Facility Data files in their native format. At a minimum, BIM files shall address major architecture design elements, major structural components, mechanical systems and electrical/communication distribution and elements as defined in Attachment F. See Attachment F for additional BIM requirements.

(e) Drawing Index: Provide an index of drawings sheet in CAD as part of the drawing set, and an electronic list in Microsoft Excel of all drawings on the CD. Include the electronic file name, the sheet reference number, the sheet number, and the sheet title, containing the data for each drawing.

(f) Hard Copies: Plot submitted hard copy drawings directly from the "electronic drawing files" and copy for quantities and sizes indicated in the distribution list at the end of this specification section. The Designers of Record shall stamp, sign and date original hard copy sheets as Released For Construction, and provide copies for distribution from this set.

3.7.2. Design Analyses

3.7.2.1. The designers of record shall update, finalize and present design analyses with calculations necessary to substantiate and support all design documents submitted.

3.7.2.2. The responsible DOR shall stamp, sign and date the design analysis. Identify the software used where, applicable (name, version, vendor). Generally, provide design analyses, individually, in an original (file copy) and one copy for the assigned government reviewer.

3.7.2.3. All disciplines review the LEED design analysis in conjunction with their discipline-specific design analysis; include a copy of the separable LEED design analysis in all design analysis submittals.

3.7.2.4. Do not combine multi-disciplined volumes of design-analysis, unless multiple copies are provided to facilitate multiple reviewers (one copy per each separate design analysis included in a volume).

3.7.3. Specifications

Specifications shall be 100% complete and in final form.

3.7.4. Submittal Register

Prepare and update the Submittal Register and submit it with the 100% design specifications (see Specification Section 01 33 00, SUBMITTAL PROCEDURES) with each design package. Include the required submittals for each specification section in a design package in the submittal register.

3.7.5. Preparation of DD Form 1354 (Transfer of Real Property)

This form itemizes the types, quantities and costs of various equipment and systems that comprise the project, for the purpose of transferring the new construction project from the Corps Construction Division to the Installation's inventory of real property. The Government will furnish the DB Contractor's design manager a DD Form 1354 checklist to use to produce a draft Form 1354. Submit the completed checklist and prepared draft Form DD 1354 with the 100% design in the Design Analysis. The Corps will use these documents to complete the final DD 1354 upon completion of construction.

3.7.6. Acceptance and Release for Construction

3.7.6.1. At the conclusion of the Final Design Review (after resolutions to the comments have been agreed upon between DOR and Government reviewers), the Contracting Officer or the ACO will accept the Final Design Submission for the design package in writing and allow construction to start for that design package. The Government may withhold acceptance until all major corrections have been made or if the final design submission requires so many corrections, even though minor, that it isn't considered acceptably complete.

3.7.6.2. Government review and acceptance of design submittals is for contract conformance only and shall not relieve the Contractor from responsibility to fully adhere to the requirements of the contract, including the Contractor’s accepted contract proposal, or limit the Contractor’s responsibility of design as prescribed under Special Contract Requirement: “Responsibility of the Contractor for Design” or limit the Government’s rights under the terms of the contract. The Government reserves the right to rescind inadvertent acceptance of design submittals containing contract deviations not separately and expressly identified in the submittal for Government consideration and approval.

3.8. DESIGN COMPLETE CONSTRUCTION DOCUMENT REQUIREMENTS

After the Final Design Submission and Review Conference and after Government acceptance of the Final Design submission, revise the design documents for the design package to incorporate the comments generated and resolved in the final review conference, perform and document a back-check review and submit the final, design complete documents. Label the final design complete documents “FOR CONSTRUCTION” or use similar language. In addition to the final drawings and specifications, the following deliverables are required for distribution and field use. The deliverable includes all documentation and supporting design analysis in final form, as well as the final review comments, disposition and the back-check. As part of the quality assurance process, the Government may perform a back-check of the released for construction documentation. Promptly correct any errors or omissions found during the Government back-check. The Government may withhold retainage from progress payments for work or materials associated with a final design package until this submittal has been received and the Government determines that it is complete.

3.9. SUBMITTAL DISTRIBUTION, MEDIA AND QUANTITIES

3.9.1. Submittal Distribution and Quantities

General: The documents which the Contractor shall submit to the Government for each submittal are listed and generally described in preceding paragraphs in this Section. Provide copies of each design submittal and design substantiation as follows (NOTE: If this is a Single Award or Multiple Award, Indefinite Delivery/Indefinite Quantity Contract, this information will be provided for each task order):

Activity and Address	Drawing Size (Full Size) **22" x 36"** Full Sets/ *Partial Sets	Design Analyses & Specs Full Sets/ *Partial Sets	Drawing Size (Half Size) **11" x 17"** Full Sets/ *Partial Sets	Non-BIM Data CD-ROM or DVD as Necessary (PDF& **.dgn**)	Furniture Submittal (FFE)	Structural Interior Design Submittal	BIM Data DVD (Per Attach F)
Commander, U.S.Army Engineer District **Savannah**	0/0	6/0	6/0	2	1	2	1
Commander, U.S.Army Engineer District, Center of Standardization **[Not Supplied - SubmittalReqDistribution : COS]**	0/0	0/0	0/0	0	0	0	0
Installation	2/0	2/0	2/0	1	1	1	1
U.S.Army Corps of Engineers Construction Area Office	2/0	8/0	8/0	2	2	0	0
Information Systems Engineering Command (ISEC)	0/0	0/0	0/0	1	1 (Electronic only)	N/A	1
Other Offices	0/0	0/0	0/0	0	0	0	0

***NOTE: For partial sets of drawings, specifications and design analyses, see paragraph 3.9.3.3, below.**

****NOTE: When specified below in 3.9.2, furnish Installation copies of Drawings as paper copies, in lieu of the option to provide secure web-based submittals.**

3.9.2. Web based Design Submittals

Except for full or half-sized drawings for Installation personnel, as designated in the Table above, Web based design submittals will be acceptable as an alternative to the paper copies listed in the Table above, provided a single hard-copy PDF based record set is provided to the Contracting Officer for record purposes. Where the contract requires the Contractor to submit documents to permitting authorities, still provide those authorities paper copies (or in an alternate format where required by the authority). Web based design submittal information shall be provided with adequate security and availability to allow unlimited access those specifically authorized to Government reviewers while preventing unauthorized access or modification. File sizes must be of manageable size for reviewers to quickly download or open on their computers. As a minimum, drawings shall be full scale on American National Standards Institute (ANSI) D sheets (34" x 22"). In addition to the optional website, provide the BIM data submission on DVD to each activity and address noted above in paragraph 3.9.1 for each BIM submission required in Attachment F.

3.9.3. Mailing of Design Submittals

3.9.3.1. Mail all design submittals to the Government during design and construction, using an overnight mailing service. The Government will furnish the Contractor addresses where each copy shall be mailed to after award of the contract (or individual task order if this is an indefinite delivery/indefinite quantity, task order contract). Mail the submittals to three (3) different addresses. Assemble drawing sheets, specs, design analyses, etc. into individual sets; do not combine duplicate pages from individual sets so that the government has to assemble a set.

3.9.3.2. Each design submittal shall have a transmittal letter accompanying it indicating the date, design percentage, type of submittal, list of items submitted, transmittal number and point of contact with telephone number.

3.9.3.3. Provide partial sets of drawings, specifications, design analyses, etc., as designated in the Table in paragraph 3.9.1, to those reviewers who only need to review their applicable portions of the design, such as the various utilities. The details of which office receives what portion of the design documentation will be worked out after award.

3.10. AS-BUILT DOCUMENTS

Provide as-built drawings and specifications in accordance with Section 01 78 02.00 10, CLOSEOUT SUBMITTALS. Update LEED design phase documentation during construction as needed to reflect construction changes and advancing project completion status (example - Commissioning Plan updates during construction phase) and include updated LEED documentation in construction closeout submittal.

ATTACHMENT A
STRUCTURAL INTERIOR DESIGN (SID) REQUIREMENTS

1.0 GENERAL INFORMATION

Structural Interior Design includes all building related elements and components generally part of the building itself, such as wall finishes, ceilings finishes, floor coverings, marker/bulletin boards, blinds, signage and built in casework. Develop the SID in conjunction with the furniture footprint.

2.0 STRUCURAL INTERIOR DESIGN (SID) REQUIREMENTS FOR THE INTERIM AND FINAL DESIGN SUBMITTALS

2.1. FORMAT AND SCHEDULE

Prepare and submit for approval an interior and exterior building finishes scheme for an interim design submittal. The DOR shall meet with and discuss the finish schemes with the appropriate Government officials prior to preparation of the schemes to be presented. Present original sets of the schemes to reviewers at an interim design conference.

At the conclusion of the interim phase, after resolutions to the comments have been agreed upon between DOR and Government reviewers, the Contractor may proceed to final design with the interior finishes scheme presented.

The SID information and samples are to be submitted in 8 ½" x 11" format using three ring binders with pockets on the inside of the cover. When there are numerous pages with thick samples, use more than one binder. Large D-ring binders are preferred to O-ring binders. Use page protectors that are strong enough to keep pages from tearing out. Anchor large or heavy samples with mechanical fasteners, Velcro, or double-faced foam tape rather than rubber cement or glue. Fold out items must have a maximum spread of 25 ½". Provide cover and spine inserts sheets identifying the document as "Structural Interior Design" package. Include the project title and location, project number, Contractor/A/E name and phone number(s), submittal stage and date.

Design submittal requirements include, but are not limited to:

2.1.1. Narrative of the Structural Interior Design Objectives

The SID shall include a narrative that discusses the building related finishes. Include topics that relate to base standards, life safety, sustainable design issues, aesthetics, durability and maintainability, discuss the development and features as they relate to the occupants requirements and the building design.

2.1.2. Interior Color Boards

Identify and key each item item on the color boards to the contract documents to provide a clear indication of how and where each item will be used. Arrange finish samples to the maximum extent possible by room type in order to illustrate room color coordination. Label all samples on the color boards with the manufacturer's name, patterns and colors name and number. Key or code samples to match key code system used on contract drawings.

Material and finish samples shall indicate true pattern, color and texture. Provide photographs or colored photocopies of materials or fabrics to show large overall patterns in conjunction with actual samples to show the actual colors. Finish samples must be large enough to show a complete pattern or design where practical.

Color boards shall include but not be limited to original color samples of the following:

All walls finishes and ceiling finishes, including corner guards, acrylic wainscoting and wall guards/chair rail finishes

All tile information, including tile grout color and tile patterns.

- All flooring finishes, including patterns.
- All door, door frame finishes and door hardware finishes
- All signage, wall base, toilet partitions, locker finishes and operable/folding partitions and trim

- All millwork materials and finishes (cabinets, counter tops, etc.)
- All window frame finishes and window treatments (sills, blinds, etc.)

Color board samples shall reflect all actual finish textures, patterns and colors required as specified. Patterned samples shall be of sufficient size to adequately show pattern and its repeat if a repeat occurs.

2.1.3. Exterior Color Boards

Prepare exterior finishes color boards in similar format as the interior finishes color boards, for presentation to the reviewers during an interim design conference. Provide original color samples of all exterior finishes including but not limited to the following:

- All Roof Finishes
- All Brick and Cast Stone Samples
- All Exterior Insulation and Finish Samples
- All Glass Color Samples
- All Exterior Metals Finishes
- All Window & Door Frame Finishes
- All Specialty Item Finishes, including trim

Identify each item on the exterior finishes color boards and key to the building elevations to provide a clear indication of how and where each item will be used.

2.2. STRUCTURAL INTERIOR DESIGN DOCUMENTS

2.2.1. General

Structural interior design related drawings must indicate the placement of extents of SID material, finishes and colors and must be sufficiently detailed to define all interior work. The following is a list of minimum requirements:

2.2.2. Finish Color Schedule

Provide finish color schedule(s) in the contract documents. Provide a finish code, material type, manufacturer, series, and color designations. Key the finish code to the color board samples and drawings.

2.2.3. Interior Finish Plans

Indicate wall and floor patterns and color placement, material transitions and extents of interior finishes.

2.2.4. Furniture Footprint Plans

Provide furniture footprint plans showing the outline of all freestanding and systems furniture for coordination of all other disciplines.

2.2.5. Interior Signage

Include interior signage plans or schedules showing location and quantities of all interior signage. Key each interior sign to a quantitative list indicating size, quantity of each type and signage text.

2.2.6. Interior Elevations, Sections and Details

Indicate material, color and finish placement.

ATTACHMENT B
FURNITURE, FIXTURES & EQUIPMENT (FF&E) REQUIREMENTS

1.0 FF&E REQUIREMENTS FOR THE INTERIM AND FINAL DESIGN SUBMITTALS

1.1. FORMAT AND SCHEDULE

Prepare and submit for approval a comprehensive FF&E scheme for an interim design submittal. The Contractor's interior designer, not a furniture dealer, shall develop the design. FF&E is the selection, layout, specification and documentation of furniture includes but is not limited to workstations, seating, tables, storage and shelving, filing, trash receptacles, clocks, framed artwork, artificial plants, and other accessories. Contract documentation is required to facilitate pricing, procurement and installation. The FF&E package is based on the furniture footprint developed in the Structural Interior Design (SID) portion of the interior design. Develop the FF&E package concurrently with the building design to ensure that there is coordination between the electrical outlets, switches, J-boxes, communication outlets and connections, and lighting as appropriate. In addition, coordinate layout with other building features such as architectural elements, thermostats, location of TV's, GF/GI equipment (for example computers, printers, copiers, shredders, faxes), etc. Locate furniture in front of windows only if the top of the item falls below the window and unless otherwise noted, do not attach furniture including furniture systems to the building. If project has SIPRNET and/or NIPRNET, coordinate furniture layout with SIPRNET and NIPRNET separation requirements. Verify that access required by DOIM for SIPRNET box and conduit is provided. The DOR shall interview appropriate Government personnel to determine FF&E requirements for furniture and furnishings prior to preparation of the scheme to be presented. Determine FFE items and quantities by, but not limited to: (1) the number of personnel to occupy the building, (2) job functions and related furniture/office equipment to support the job function, (3) room functions, (4) rank and grade. Present original sets of the scheme to reviewers at an interim design conference upon completion of the interim architectural submittal or three months prior to the submittal of the final FF&E package (whichever comes first).

Design may proceed to final with the FF&E scheme presented at the conclusion of the interim phase, after resolutions to the comments have been agreed upon between DOR and Government reviewers.

Provide six copies of the electronic versions of all documents upon completion of the final architectural submittal or ten months prior to the contract completion date (whichever comes first), to ensure adequate time for furniture acquisition. Provide unbound, electronic drawings in CAD and BIM. Provide all files needed to v,/iew complete drawings. Submit all text documents in Microsoft Word or Excel..

Submit three copies of the final and complete FF&E information and samples in 8 ½" x 11" format using three ring binders with pockets on the inside of the cover upon completion of the final architectural submittal or ten months prior to the contract completion date (whichever comes first). Use more than one binder when there are numerous pages with thick samples. Large D-ring binders are preferred to O-ring binders. Use page protectors that are strong enough to keep pages from tearing out for upholstery and finish boards. Anchor large or heavy samples with mechanical fasteners, Velcro, or double-faced foam tape rather than rubber cement or glue. Fold out items must have a maximum spread of 25 ½". Provide cover and spine inserts sheets identifying the document as "Furniture, Fixtures & Equipment" package and include the project title and location, project number, Contractor/A/E name and phone number(s), submittal stage and date.

Provide electronic copies of all documents upon completion of the final architectural submittal or ten months prior to the contract completion date (whichever comes first), to ensure adequate time for furniture acquisition. Provide six compact disks with all drawings files needed to view the complete drawings unbound and in the latest version AutoCAD. Provide six additional compact disks of all text documents in Microsoft Word or Excel.

Design submittal requirements include, but are not limited to:

1.1.1. Narrative of Interior Design Objectives

Provide a narrative description of the furniture, to include functional, safety and ergonomic considerations, durability, sustainability, aesthetics, and compatibility with the building design.

1.1.2. Furniture Order Form

Prepare one Furnishings Order Form for each item specified in the design. This form identifies all information required to order each individual item. In addition to the project name and location, project number, and submittal phase, the order form must include:

(a) Furniture item illustration and code

(b) Furniture item name

(c) Job name, location, and date

(d) General Services Administration (GSA) FSC Group, part, and section

(e) Manufacturer, Product name and Product model number or National Stock Number (NSN)

(f) Finish name and number (code to finish samples)

(g) Fabric name and number, minimum Wyzenbeek Abrasion Test double rubs (code to fabric samples)

(h) Dimensions

(i) Item location by room number and room name

(j) Quantity per room

(k) Total quantity

(l) Special instructions for procurement ordering and/or installation (if applicable)

(m) Written Product Description: include a non-proprietary paragraph listing the salient features of the item to include but not limited to:

(1) required features and characteristics

(2) ergonomic requirements

(3) functional requirements

(4) testing requirements

(5) furniture style

(6) construction materials

(7) minimum warranty

The following is an example for “m” features and characteristics, ergonomic requirements and functional requirements:

Chair Description:

(1) Mid-Back Ergonomic Task Chair

(2) Pneumatic Gaslift; Five Star Base

(3) Mesh Back; Upholstered Seat

(4) Height and Width Adjustable Task Arms:

a. Arm Height: 6”- 11” (+-1/2”)

b. Arm Width: 2”– 4” adjustment

(5) Height Adjustable Lumbar Support

(6) Adjustable Seat Height 16”-21” (+- 1”)

(7) Sliding Seat Depth Adjustment 15”-18” (+-1”)

(8) Standard Hard Casters (for carpeted areas)

(9) Overall Measurements:

a. Overall width: 25” - 27”

b. Overall depth: 25”– 28”

(10) Must have a minimum of the following adjustments (In addition to the above):

a. 360 Degree Swivel

b. Knee-Tilt with Tilt Tension

c. Back angle

d. Forward Tilt

e. Forward Tilt and Upright Tilt Lock

For projects with systems furniture, also provide a written description of the following minimum requirements:

(1) Type furniture systems (panel, stacking panels, spine wall, desk based system, or a combination)

(2) Minimum noise reduction coefficient (NRC)

(3) Minimum sound transfer coefficient (STC)

(4) Minimum flame spread and smoke development

(5) UL testing for task lighting and electrical system

(6) Panel widths and heights and their locations (this may be done on the drawings)Worksurface types and sizes (this may be done on the drawings)

(7) Worksurface edge type

(8) Varying panel/cover finish materials and locations (locations may be shown on the drawings)

(9) Storage requirements

(10) Keyboard requirements

(11) Lock and keying requirements

(12) Accessory components (examples: tack boards, marker boards, paper management)

(13) Electrical and communication raceway requirement; type, capacity and location (base, beltline, below and/or above beltline)

(14) Locations of communication cables (base, beltline, below and/or above beltline, top channel)

(15) Types of electrical outlets

(16) Types of communication jacks; provided and installed by others

(17) Locations of electrical outlets and communication jacks (this may be done on the drawings)

(18) Type of cable (examples: Cat. 5, Cat. 6, fiber optic; UTP or STP, etc.) system needs to support; provided and installed by others

1.1.3. Alternate Manufacturer List

Provide a table consisting of major furniture items that lists the manufacturers products specified on the Order Form and two alternate manufacturers. Major furniture items include, but are not limited to, casegoods, furniture systems, seating, and tables. Organize matrix by item code and item name. Supply alternates that are available on GSA Schedule and meet the requirements of the Furniture Order Form. One of the two alternates must be from UNICOR if possible. Provide manufacturer name address, telephone number, product series and product name for each alternate manufacturer.

1.1.4. FF&E Procurement List

Provide a table that lists all FF&E furniture, mission unique equipment and building Contractor Furnished/Contractor Installed (CF/CI) items. Give each item a code and name and designate whether item will be procured as part of the FF&E furniture, mission unique equipment or the building construction contract. Use the item code to key all FF&E documents including location plans, color boards, data sheets, cost estimate, etc.

1.1.5. Points of Contact (POCs)

Provide a comprehensive list of POCs needed to implement the FF&E package. This would include but not be limited to appropriate project team members, using activity contacts, interior design representatives, construction contractors and installers involved in the project. In addition to name, address, phone, fax and email, include each contact's job function. Divide the FF&E package into different sections based on this listing, applies to order forms and cost estimates.

1.1.6. Color Boards

Provide color boards for all finishes and fabrics for all FF&E items. Finishes to be included but not limited to paint, laminate, wood finish, fabric, etc.

1.1.7. Itemized Furniture Cost Estimate

Provide an itemized cost estimate of furnishings keyed to the plans and specifications of products included in the package. This cost estimate should be based on GSA price schedules. The cost estimate must include separate line items for general contingency, installation, electrical hook-up for systems furniture or other furniture requiring hardwiring by a licensed electrician, freight charges and any other related costs. Installation and freight quotes from vendors should be use in lieu of a percentage allowance when available. Include a written statement that the pricing is based on GSA schedules. An estimate developed by a furniture dealership may be provided as support information for the estimate, but must be separate from the contractor provided estimate.

1.2. INTERIOR DESIGN DOCUMENTS

1.2.1. Overall Furniture and Area Plans

Provide floor Plans showing locations and quantities of all freestanding, and workstation furniture proposed for each floor of the building. Key each room to a large scale Furniture Placement Plan showing the furniture configuration, of all furniture. Provide enlarged area plans with a key plan identifying the area in which the building is located. Key all the items on the drawings by furniture item code. Do not provide manufacturer specific information such as product names and numbers on drawings, Drawings shall be non-proprietary. This is typical for FFE on all plans, including those mentioned below.

1.2.2. Workstation Plans

Show each typical workstation configuration in plan view, elevations or isometric view. Drawings shall illustrate panels and all major components for each typical workstation configuration. Identify workstations using the same numbering system as shown on the project drawings. Key components to a legend on each sheet which identifies and describes the components along with dimensions. Provide the plan, elevations and isometric of each typical workstation together on the same drawing sheet.

1.2.3. Panel Plans

Show panel locations and critical dimensions from finished face of walls, columns, panels including clearances and aisle widths. Key panel assemblies to a legend which shall include width, height, configuration of frames, panel fabric and finishes (if there are different selections existing within a project), powered or non-powered panel and wall mount locations.

1.2.4. Desk Plans

Provide typical free standing desk configurations in plan view, elevation or isometric view and identify components to clearly represent each desk configuration.

1.2.5. Reflected Ceiling Plans

Provide typical plans showing ceiling finishes and heights, lighting fixtures, heating ventilation and air conditioning supply and return, and sprinkler head placement for coordination of furniture.

1.2.6. Electrical and Telecommunication Plans

Show power provisions including type and locations of feeder components, activated outlets and other electrical componentsShow locations and quantities of outlets for workstations. Clearly identify different outlets, i.e. electrical, LAN and telecommunication receptacles indicating each type proposed. Show wiring configuration, (circuiting, switching, internal and external connections) and provide as applicable.

1.2.7. Artwork Placement Plans

Provide an Artwork Placement Plan to show location of artwork, assign an artwork item code to each piece of artwork. As an alternative, artwork can be located on the Furniture Plans. Provide a schedule that identifies each piece by room name and number. Provide installation instructions; include mounting height.

1.2.8. Window Drapery Plans

Provide Interior Window Drapery Plans. Key each drapery treatment to a schedule showing color, pattern, material, drapery size and type, draw direction, location and quantities.

1.3. FURNITURE SELECTION

1.3.1. Select furniture from the GSA Schedules. Specify furniture available open market when an item is not available on the GSA Schedules. Provide justification fort items not available on the GSA Schedules.

1.3.2. To the greatest extent possible when specifying furniture work within a manufacturer's family of furniture for selections, example: Steelcase, Turnstone, Brayton International, Metro, and Vecta are all Steelcase companies. Each alternate should also be specified from a manufacturer's family of furniture, example: first set of alternates would be specified from Knoll's family of furniture and the second from Herman Miller family of furniture. It may be necessary to make some selections from other than a manufacturer's family of furniture if costs are not reasonable for particular items, some items are not available or appropriate for the facility or the items are not on GSA Schedule. If this occurs, consider specifying product from an open line that is accessible by numerous dealerships. Select office furniture including case goods, tables, storage, seating, etc. that is compatible in style, finish and color. Select furniture that complies with ANSI/BIFMA and from manufacturer's standard product line as shown in the most recent published price list and/or amendment and not custom product.

1.4. CONSTRUCTION

1.4.1. Provide knee space at workstations and tables that is not obstructed by panels/legs that interfere with knee space of seated person and provide desks, storage and tables with leveling devices to compensate for uneven floors.

1.4.2. Provide worksurface tops constructed to prevent warpage. Provide user friendly features such as radius edges. Do not use sharp edges and exposed connections and ensure the underside of desks, tables and worksurfaces are completely and smoothly finished. Provide abutting worksurfaces that mate closely and are of equal heights when used in side-by-side configurations in order to provide a continuous and level worksurface.

1.4.3. Drawers shall stay securely closed when in the closed position and protect wires from damage during drawer operation. Include a safety catch to prevent accidental removal when fully open

1.4.4. Unless otherwise noted, specify lockable desks and workstations and storage of steel construction. Use tempered glass glazing when glazing is required.

1.5. FINISHES AND UPHOLSTERY

1.5.1. Specify neutral colors for casegoods, furniture systems, storage and tables. Specify desk worksurfaces and table tops that are not too light or too dark in color and have a pattern to help hide soiling. Accent colors are allowed in break and lounge areas. Keep placement of furniture systems panel fabric accent colors to a minimum. All finishes shall be cleanable with ordinary household cleaning solutions.

1.5.2. Use manufacturer's standard fabrics; including textile manufacturers fabrics that have been graded into the furniture manufactures fabric grades and are available through their GSA Schedule. Customers Own Material

(COM) can be used in headquarter buildings in command suites with executive furniture. Coordinate specific locations with Corps of Engineers Interior Designer.

1.5.3. Specify seating upholstery that meets Wyzenbeek Abrasion Test, 55,000 minimum rubs. Specify a soil retardant finish for woven fabrics if Crypton or vinyl upholstery is not provided for seating in dining areas. Use manufacturer's standard fabrics. This includes textile manufacturers fabrics that have been graded into the furniture manufactures fabric grades and are available through their GSA Schedule. Specify upholstery and finish colors and patterns that help hide soiling. Specify finishes that can be cleaned with ordinary household cleaning solutions.

1.6. ACCESSORIES

1.6.1. Specify all accessories required for completely finished furniture installation. Provide filing cabinets and storage for office supplies. Provide tack surfaces at workstations with overhead storage. Provide tackable surfaces at workstations with overhead storage.

1.6.2. Not Used.

1.6.3. Workstations are to be equipped with stable keyboard trays that have height adjustability, tilting capability, including negative tilt, have a mouse pad at same height as the keyboard tray that can accommodate both left and right handed users, and retractable under worksurface.

1.7. MISSION UNIQUE EQUIPMENT

Funding for FF&E furniture items and mission unique equipment (MUE) items are from two different sources. Separate the designs and procurement documentation for FFE items and MUE. MUE includes, but is not limited to, items such as industrial shelving, workbenches, appliances, fitness equipment, IT equipment and supporting carts. The User will purchase and install mission unique equipment items, unless otherwise noted. Identify locations of known MUE items such as industrial shelving, workbenches, appliances, etc. for space planning purposes.

1.8. SUSTAINABILITY

1.8.1. For all designs provided regardless of facility type, make every effort to implement all aspects of sustainability to the greatest extent possible for all the selections made in the FF&E package. This includes but is not limited to the selection of products that consider: **Material Chemistry and Safety of Inputs** (What chemicals are used in the construction of the selections?); **Recyclability** (Do the selections contain recycled content?); **Disassembly** (Can the selections be disassembled at the end of their useful life to recycle their materials?).

1.8.2. Make selections to the greatest extent possible of products that possess current McDonough Braungart Design Chemistry (MBDC) certification or other "third-party" certified Cradle to Cradle program, Forest Stewardship Council (FSC) certification, GREENGAURD certification or similar "third-party" certified products consisting of low-emitting materials.

1.9. FURNITURE SYSTEMS

1.9.1. General.

Where appropriate, design furniture systems in open office areas. Coordinate style and color of furniture systems with other storage, seating, etc. in open office areas. Minimize the number of workstation typicals and the parts and pieces required for the design to assist in future reconfiguration and inventorying.

1.9.2. Connector Systems.

Specify a connector system that allows removal of a single panel or spine wall within a typical workstation configuration without requiring disassembly of the workstation or removal of adjacent panels. Specify connector system with tight connections and continuous visual seals. When Acoustical panels are used, provide connector system with continuous acoustical seals. Specify concealed clips, screws, and other construction elements, where possible.

1.9.3. Panels and Spine Walls

Specify panels and spine walls with hinged or removable covers that permit easy access to the raceway when required but are securely mounted and cannot be accidentally dislodged under normal conditions. Panels shall be capable of structurally supporting more than 1 fully loaded component per panel per side. Raceways are to be an integral part of the panel and must be able to support lay-in cabling and have a large capacity for electrical and IT. Do not thread cables through the frame.

1.9.4. Electrical And Information/Technology (IT)

Design furniture with electrical systems that meets requirements of UL 1286 when powered panels are required and UL approved task lights that meet requirements of NFPA 70. Dependent on user requirements and Section 01 10 00, paragraph 3 requirements, it is recommended that workstation electrical and IT wiring entry come from the building walls to eliminate the use of power poles and access at the floor. Design electrical and IT systems that are easily accessed in the spine wall and panels without having to move return panels and components. Electrical and IT management will be easily accessible by removable wall covers which can be removed while workstation components are still attached. Specify connector system that has continuation of electrical and IT wiring within workstations and workstation to workstation.

1.9.5. Pedestals

Specify pedestals that are interchangeable from left to right, and right to left, and retain pedestal locking system capability.

1.10. EXECUTIVE FURNITURE

1.10.1. Design for executive furniture in command areas, coordinate specific locations with Corps of Engineers Interior Designer. Use upgraded furniture, upholsteries and finishes in command suites. This includes but is not limited to wood casegoods, seating and tables. Select executive furniture casegoods from a single manufacturer and style line, to include workstations, credenzas, filing, and storage, etc.

1.10.2. Specify furniture with wood veneer finish (except worksurfaces) with mitered solid wood edge of same wood type. Provide worksurface plastic laminate that closely matches adjacent wood veneer. Other executive office furniture such as seating, tables, executive conference room furniture, etc. shall be compatible in style, finish and color with executive furniture casegoods.

1.11. SEATING

1.11.1. General

Specify appropriate chair casters and glides for the floor finish where the seating is located. Universal casters that are appropriate for both hard surface flooring and carpet are preferred. All seating shall support up to a minimum of 250 lbs.

1.11.2. Desk and Guest Seating

Select ergonomic desk chairs with casters, non-upholstered adjustable arms, waterfall front, swivel, tilt, variable back lock, adjustable back height or adjustable lumbar support, pneumatic seat height adjustment, and padded, contoured upholstered seat and back. Desk and guest chair backs may be other than upholstered such as mesh fabric if it is ergonomically designed, forms to back and is comfortable. Depending on scale of desk chair provide seat pan forward and back adjustment to increase or decrease depth of seat pan. All desk chairs shall have an adjustable seat height range of 4 1/2", range to include 16 1/2-20". Select guest chairs that are compatible in style, finish and color with the desk chairs.

1.11.3. Conference Room Seating

At tables, select ergonomic conference seating with casters, non-upholstered arms, waterfall front, swivel, tilt, pneumatic seat height adjustment, and padded, contoured seat and back, unless otherwise noted. Select arm height and/or design that allows seating to be moved up closely to the table top. Conference chair backs may be other than upholstered such as mesh fabric if it is ergonomically designed, forms to back and is comfortable. Perimeter conference chairs shall be compatible in style, finish and color with conference seating at the tables.

1.11.4. Lounge, Waiting and Reception Area Seating

Select seating with arms and cushioned, upholstered seat and back. In heavy use areas, arms shall be easily cleaned such as non-upholstered arms or upholstered arms with wood arm caps unless otherwise noted.

1.11.5. Break Room Seating

Select stackable seating that is easily cleaned. Seating shall be appropriate for table and counter heights as applicable with non-upholstered arms if arms are required. Chairs shall have metal legs and composite materials for seats.

1.11.6. Lounge, Waiting and Reception Furniture.

Design for end and coffee tables with plastic laminate tops that are compatible in style finish and color with the seating.

1.12. FILING AND STORAGE.

Select storage and shelving units that meet customer's functional load requirements for stored items. Specify counterweights for filing cabinets when required by the manufacturer for stability. File drawers shall allow only one drawer to be opened at a time. Provide heavy duty storage and shelving if information is not available.

1.13. TRAINING TABLES.

Don't use plastic laminate self edge. Training tables shall be reconfigurable, moveable and storable; lighter weight folding with dollies or castered as necessary. Specify dollies if required.

1.14. FURNITURE WARRANTIES.

Specify manufacturer's performance guarantees or warranties that include parts, labor and transportation as follows:

Furniture System, unless otherwise noted – 10 year minimum
Furniture System Task Lights – 2 year minimum, excluding bulbs
Furniture System Fabric – 3 year minimum
Desks - 10 year minimum
Seating, unless otherwise noted - 10 year minimum
Seating Mechanisms and Pneumatic Cylinders - 10 years
Fabric - 3 years minimum
Filing and Storage - 10 year minimum
Tables, unless otherwise noted - 10 year minimum
Table Mechanisms – 5 year
Table Ganging Device - 1 year
Items not listed above - 1 year minimum

ATTACHMENT C
TRACKING COMMENTS IN DRCHECKS

1.0 General

The Government and DB Contractor shall set up the project in Dr Checks. Throughout the design process, the parties shall enter, track, and back-check comments using the DrChecks system. Government reviewers enter design review comments into DrChecks. Designers of Record shall annotate comments timely and specifically to indicate exactly what action will be taken or why the action is not required. Comments considered critical by the conference participants shall be flagged as such.

2.0 DrChecks Review Comments

The Contractor and the Government shall monitor DrChecks to assure all comments are annotated and agreed to by the designers and reviewers prior to the next submittal. The DrChecks comments and responses shall be printed and included in the design analysis for record.

2.1. Conference participants (reviewers) will expect coordination between Design Analysis calculations and the submitted design. Reviewers will also focus on the design submittal's satisfaction of the contract requirements.

2.2. The Designers of Record shall answer each comment in DrChecks with a formal response prior to the next submittal, clearly indicating what action will be taken and what drawing/spec will change. Designers of Record are encouraged to directly contact reviewers to discuss and agree to the formal comment responses rather than relying only on DrChecks and review meetings to discuss comments. With the next design conference, reviewers will back-check answers to the comments against the submittal, in addition to reviewing additional design work.

2.3. Comments that, in the DB Contractor's opinion, require effort outside the scope of the contract shall be clearly indicated as such in DrChecks. The DB Contractor shall not proceed with work outside the contract until a modification to the contract is properly executed, if one is necessary.

3.0 DrChecks Initial Account Set-Up

To initialize an office's use of DrChecks, choose a contact person within the office to call the DrChecks Help Desk at 800-428-HELP, M-F, 8AM-5PM, Central time. This POC will be given an office password to distribute to others in the office. Individuals can then go to the hyperlink at http://www.projnet.org and register as a first time user. Upon registration, each user will be given a personal password to the DrChecks system.

3.1. Once the office and individuals are registered, the COE's project manager or lead reviewer will assign the individuals and/or offices to the specific project for review. At this point, persons assigned can make comments, annotate comments, and close comments, depending on their particular assignment.

4.0 DrChecks Reviewer Role

The Contractor is the technical reviewer and the Government is the compliance reviewer of the DB designers design documents. Each reviewer enters their own comments into the Dr Checks system. To enter comments:

4.1. Log into DrChecks.

4.2. Click on the appropriate project.

4.3. Click on the appropriate review conference. An Add comment screen will appear.

4.4. Select or fill out the appropriate sections (particularly comment discipline and type of document for sorting) of the comment form and enter the comment in the space provided.

4.5. Click the Add Comment button. The comment will be added to the database and a fresh screen will appear for the next comment you have.

4.6. Once comments are all entered, exit DrChecks by choosing “My Account” and then Logout.

5.0 DrChecks Comment Evaluation

The role of the designers of record is to evaluate and respond to the comments entered by the Government reviewers and by the DB Contractor. To respond to comments:

5.1. Log into DrChecks.

5.2. Click on the appropriate project.

5.3. Under “Evaluate” click on the number under “Pending”.

5.4. Locate the comments that require your evaluation. (Note: If you know the comment number you can use the Quick Pick window on your home page in DrChecks; enter the number and click on go.)

5.5. Select the appropriate evaluation (concur, non-concur, for information only, or check and resolve) and add the response.

5.6. Click on the Add button. The evaluation will be added to the database and a fresh screen will appear with the next comment.

5.7. Once evaluations are all entered, exit DrChecks by choosing “My Account” and then Logout.

6.0 DrChecks Back-check

At the following design conference, participants will back-check comment annotations against newly presented documents to verify that the designers' responses are acceptable and completed. The Contractor and Government reviewers shall either enter additional back-check comments, as necessary or close those that are resolved as a result of the design conferences:

6.1. Log into DrChecks.

6.2. Click on the appropriate project.

6.3. Under “My Backcheck” click on the number under “Pending”.

6.4. If you agree with the designer’s response select “Close Comment” and add a closing response if desired.

6.5. If you do not agree with the designer’s response or the submittal does not reflect the response given, select “Issue Open”, enter additional information.

6.6. Click on the Add button. The back-check will be added to the database and a fresh screen will appear with the next comment.

6.7. Once back-checks are all entered, exit DrChecks by choosing “My Account” and then Logout. The design is completed and final when there are no pending comments to be evaluated and there are no pending or open comments under back-check.

ATTACHMENT D
SAMPLE FIRE PROTECTION AND LIFE SAFETY CODE REVIEW

Instructions: Use the information outlined in this document to provide the minimum requirement for development of Fire Protection and Life Safety Code submittals for all building projects. Additional and supplemental information may be used to further develop the code review. Insert N/A after criteria, which may be “not applicable”.

1.0 SAMPLE FIRE PROTECTION AND LIFE SAFETY CODE REVIEW

1.1. Project Name (insert name and location)

1.2. Applicable Codes and Standards

1.2.1. Unified Facilities Criteria (UFC): 3-600-01, Design: Fire Protection Engineering For Facilities

1.2.2. International Building Code (IBC) for fire resistance requirements, allowable floor area, building height limitations and building separation distance requirements, except as modified by UFC 3-600-01.

1.2.3. National Fire Protection Association (NFPA) 101 Life Safety Code (latest edition), for building egress and life safety and applicable criteria in UFC 3-600-01.

1.2.4. ADA and ABA Accessiblity Guidelines. For Buildings and Facilities See Section 01 10 00, Paragraph 3 for facility specific criteria.

1.3. Occupancy Classification
IBC chapters 3 and 4

1.4. Construction Type
IBC chapter 6

1.5. Area Limitations
IBC chapter 5, table 503

1.6. Allowable Floor Areas
IBC section 503, 505

1.7. Allowable area increases
IBC section 506, 507

1.8. Maximum Height of Buildings
IBC section 504

1.9. Fire-resistive substitution

1.10. Occupancy Separations
IBC table 302.3.2

1.11. Fire Resistive Requirements

1.11.1. Exterior Walls - [_____] hour rating, IBC table 601, 602

1.11.2. Interior Bearing walls - [_____] hour rating

1.11.3. Structural frame - [_____] hour rating

1.11.4. Permanent partitions - [_____] hour rating

1.11.5. Shaft enclosures - [_____] hour rating

1.11.6. Floors & Floor-Ceilings - [_____] hour rating

1.11.7. Roofs and Roof Ceilings - [_____] hour rating

1.12. Automatic Sprinklers and others used to determine the need for automatic Extinguishing Equipment, Extinguishing Systems, Foam Systems, Standpipe

1.12.1. UFC 3-600-01, chapters 4 and 6 systems, wet chemical systems, etc. State which systems are required and to what criteria they will be designed.

1.12.2. UFC 3-600-01, Appendix B Occupancy Classification. Note the classification for each room. This may be accomplished by classifying the entire building and noting exceptions for rooms that differ (E.g. The entire building is Light Hazard except boiler room and storage rooms which are [_____], etc.)

1.12.3. UFC 3-600-01, Chapter 3 Sprinkler Design Density, Sprinkler Design Area, Water Demand for Hose Streams (supply pressure and source requirements).

1.12.4. UFC 3-600-01, Chapter 4 Coverage per sprinkler head. Extended coverage sprinkler heads are not permitted.

1.12.5. Available Water Supply. Provide the results of the water flow tests showing the available water supply static pressure and residual pressure at flow. Based on this data and the estimated flow and pressure required for the sprinkler system, determine the need for a fire pump.

1.12.6. NFPA 13, Para. 8.16.4.6.1. Provide backflow preventer valves as required by the local municipality, authority, or water purveyor. Provide a test valve located downstream of the backflow preventer for flow testing the backflow preventer at full system demand flow. Route the discharge to an appropriate location outside the building.

1.13. Kitchen Cooking Exhaust Equipment

Describe when kitchen cooking exhaust equipment is provided for the project. Type of extinguishing systems for the equipment should be provided. per NFPA 96. Show all interlocks with manual release switches, fuel shutoff valves, electrical shunt trips, exhaust fans, and building alarms.

1.14. Portable Fire Extinguishers, fire classification and travel distance. per NFPA 10

1.15. Enclosure Protection and Penetration Requirements. - Opening Protectives and Through Penetrations

1.15.1. IBC Section712, 715 and Table 715.3. Mechanical rooms, exit stairways, storage rooms, janitor [_____] hour rating. IBC Table 302.1.1

1.15.2. Fire Blocks, Draft Stops, Through Penetrations and Opening Protectives

1.16. Fire Dampers. Describe where fire dampers and smoke dampers are to be used (IBC Section 716 and NFPA 90A}. State whether isolation smoke dampers are required at the air handler.

1.17. Detection Alarm and Communication. UFC 3-600-01, (Chapter 5); NFPA 101 para. 3.4 (chapters 12-42); NFPA 72

1.18. Mass Notification. Describe building/facility mass notification system (UFC 4-021-01) type and type of base-wide mass notification/communication system. State whether the visible notification appliances will be combined with the fire alarm system or kept separate. (Note: Navy has taken position to combine visible notification appliances with fire alarm).

1.19. Interior Finishes (classification). NFPA 101.10.2.3 and NFPA 101.7.1.4

1.20. Means of Egress

1.20.1. Separation of Means of Egress, NFPA 101 chapters 7 and 12-42; NFPA101.7.1.3

1.20.2. Occupant Load, NFPA101.7.3.1 and chapters 12-42.

1.20.3. Egress Capacity (stairs, corridors, ramps and doors) NFPA101.7.3.3

1.20.4. Number of Means of Egress, NFPA101.7.4 and chapters 12-42.

1.20.5. Dead end limits and Common Path of Travel, NFPA 101.7.5.1.6 and chapters 12-42.

1.20.6. Accessible Means of Egress (for accessible buildings), NFPA101.7.5.4

1.20.7. Measurement of Travel Distance to Exits, NFPA101.7.6 and chapters 12-42.

1.20.8. Discharge from Exits, NFPA101.7.7.2

1.20.9. Illumination of Means of Egress, NFPA101.7.8

1.20.10. Emergency Lighting, NFPA101.7.9

1.20.11. Marking of Means of Egress, NFPA101.7.10

1.21. Elevators, UFC 3-600-01, Chapter 6; IBC and ASME A17.1 - 2000,(Safety Code for Elevators and Escalators)

1.22. Accessibility Requirements, ADA and ABA Accessibility Guidelines for Buildings and Facilities

1.23. Certification of Fire Protection and Life Safety Code Requirements. (Note: Edit the Fire team membership if necessary). Preparers of this document certify the accuracy and completeness of the Fire Protection and Life Safety features for this project in accordance with the attached completed form(s).

1.24. Designer of Record. Certification of Fire protection and Life Safety Code Requirements. (Note: Edit the Fire team members if necessary). Preparers of this document certify the accuracy and completeness of the Fire Protection and Life Safety features of this project.

Fire Protection Engineer of Record:

_____

Signature and Stamp

Date

OR

Architect of Record:

_____

Signature and Stamp

Date

Mechanical Engineer of Record:

_____

Signature and Stamp

Date

Electrical Engineer of Record:

_____

Signature/Date

ATTACHMENT E
LEED SUBMITTALS

LEED Credit Paragraph	Contractor Check Here if Credit is Claimed	**LEED-NC v3 Submittals (OCT09)**		Provide for Credit Audit Only		Date Submitted (to be filled in by Contractor)	Government Reviewer's Use
PAR		**FEATURE**	**DUE AT**		**REQUIRED DOCUMENTATION**	**DATE**	**REV**
GENERAL							
	GENERAL - All calculations shall be in accordance with LEED 2009 Reference Guide.						
	GENERAL: Obtain excel version of this spreadsheet at http://en.sas.usace.army.mil/enWeb, "Engineering Criteria".						
	GENERAL - For all credits, narrative/comments may be added to describe special circumstances or considerations regarding the project's credit approach.						
	GENERAL - Include all required LEED drawings indicated below in contract drawings with applicable discipline drawings, labeled For Reference Only.						
	NOTE: Each submittal indicated with "**" differs from LEED certified project submittals by either having a different due date or being an added submittal not required by GBCI.						
	NOTE: Projects seeking LEED certification need only submit to GBCI whatever documentation is acceptable to GBCI (for example, licensed professional certifications). This checklist identifies what must be submitted to the Government for internal review purposes. Government review of LEED documentation in no way supercedes or modifies the requirements and rulings of of GBCI for purposes of compliance with project requirement to obtain LEED certifiaction.						
	GENERAL - Audit documentation may include but is not limited to what is indicated in this table.						
			Closeout		List of all Final Design submittals revised after final design to reflect actual closeout conditions. Revised Final Design submittals. - OR - Statement confirming that no changes have been made since final design that effect final design submittal documents.		Proj Engr (PE)
CATEGORY 1 - SUSTAINABLE SITES							
SSPR1		Construction Activity Pollution Prevention (PREREQUISITE)	**Final Design		List of drawings and specifications that address the erosion control, particulate/dust control and sedimentation control measures to be implemented.		CIV
			**Final Design		Delineation and labeling of "LEED Project site boundary" on site plan.		CIV
			**Final Design		Narrative that indicates which compliance path was used (NPDES or Local standards) and describes the measures to be implemented on the project. If a local standard was followed, provide specific information to demonstrate that the local standard is equal to or more stringent than the NPDES program.		CIV
SS1		Site Selection	Final Design		Statement confirming that project does not meet any of the prohibited criteria.		CIV
			**Final Design		Delineation and labeling of "LEED Project site boundary" on site plan.		CIV
			Final Design	X	LEED Site plan drawing that shows all proposed development, line depicting boundary of all bodies of water and/or wetlands within 100 feet of project boundary and a line depicting 5' elevation above 100 year flood line that falls within project boundary. Not required if neither condition applies.		CIV
SS2		Development Density & Community Connectivity	Final Design		Option 1: LEED Site vicinity plan showing project site and surrounding development. Show density boundary or note drawing scale.		CIV
			**Final Design		Delineation and labeling of "LEED Project site boundary" on site plan.		CIV
			Final Design		Option 1: Table indicating, for project site and all surrounding sites within density radius (keyed to site vicinity plan), site area and building area. Project development density calculation. Density radius calculation. Development density calculation within density radius.		CIV
			Final Design		Option 2: LEED Site vicinity plan showing project site, the 1/2 mile community radius, pedestrian walkways and the locations of the residential development(s) and Basic Services surrounding the project site.		CIV
			Final Design		Option 2: List (including business name and type) of all Basic Services facilities within the 1/2 mile radius, keyed to site vicinity plan.		CIV
SS3		Brownfield Redevelopment	Final Design		Narrative describing contamination and the remediation activities included in project. Include statement indicating how site was determined to be a brownfield.		CIV
			**Final Design		Delineation and labeling of "LEED Project site boundary" on site plan.		CIV
SS4.1		Alternative Transportation: Public Transportation Access	Final Design		Statement indicating which option for compliance applies. State whether public transportation is existing or proposed and, if proposed, cite source of this information.		CIV
			**Final Design		Delineation and labeling of "LEED Project site boundary" on site plan.		CIV
			Final Design		Option 1: LEED Site vicinity plan showing project site, mass transit stops and pedestrian path to them with path distance noted.		CIV
			Final Design		Option 2: LEED Site vicinity plan showing project site, bus stops and pedestrian path to them with path distance noted.		CIV
SS4.2		Alternative Transportation: Bicycle Storage & Changing Rooms	Final Design		FTE calculation. Bicycle storage spaces calculation. Shower/changing facilities calculation.		CIV
			Final Design		List of drawings that show the location(s) of bicycle storage areas. Statement indicating distance from building entrance.		CIV
			Final Design		List of drawings that show the location(s) of shower/changing facilities and, if located outside the buiding, statement indicating distance from building entrance.		CIV

LEED Credit Paragraph	Contractor Check Here if Credit is Claimed	**LEED-NC v3 Submittals (OCT09)**		Provide for Credit Audit Only		Date Submitted (to be filled in by Contractor)	Government Reviewer's Use
PAR		**FEATURE**	**DUE AT**		**REQUIRED DOCUMENTATION**	**DATE**	**REV**
SS4.3		Alternative Transportation: Low Emitting & Fuel Efficient Vehicles	Final Design		Statement indicating which option for compliance applies. FTE calculation. Statement indicating total parking capacity of site.		CIV
			**Final Design		Delineation and labeling of "LEED Project site boundary" on site plan.		CIV
			Final Design		Option 1: Low-emission & fuel-efficient vehicle calculation.		CIV
			Final Design		Option 1: List of drawings and specification references that show location and number of preferred parking spaces for low-emission & fuel-efficient vehicles and signage.		CIV
			Final Design		Option 1: Statement indicating quantity, make, model and manufacturer of low-emission & fuel-efficient vehicles to be provided. Statement confirming vehicles are zero-emission or indicating ACEEE vehicle scores.		CIV
			Final Design		Option 2: Low-emission & fuel-efficient vehicle parking calculation.		CIV
			Final Design		Option 2: List of drawings and specification references that show location and number of preferred parking spaces and signage.		CIV
			Final Design		Option 3: Low-emission & fuel-efficient vehicle refueling station calculation.		CIV
			Final Design		Option 3: List of drawings and specifications indicating location and number of refueling stations, fuel type and fueling capacity for each station for an 8-hour period.		CIV
			Closeout	X	Option 3: Construction product submittals indicating what was provided and confirming compliance with respect to fuel type and fueling capacity for each station for an 8-hour period.		CIV
SS4.4		Alternative Transportation: Parking Capacity	Final Design		Statement indicating which option for compliance applies.		CIV
			**Final Design		Delineation and labeling of "LEED Project site boundary" on site plan.		CIV
			Final Design		Option 1: Preferred parking calculation including number of spaces required, total provided, preferred spaces provided and percentage.		CIV
			Final Design		Option 2: FTE calculation. Preferred parking calculation including number of spaces provided, preferred spaces provided and percentage.		CIV
			Final Design		Options 1 and 2: List of drawings and specification references that show location and number of preferred parking spaces and signage.		CIV
			Final Design		Option 3: Narrative indicating number of spaces required and provided and describing infrastructure and support programs with description of project features to support them.		CIV
SS5.1		Site Development: Protect or Restore Habitat	**Final Design		Option 1: List of drawing and specification references that convey site disturbance limits.		CIV
			**Final Design		Delineation and labeling of "LEED Project site boundary" on site plan.		CIV
			**Final Design		Option 2: LEED site plan drawing that delineates boundaries of each preserved and restored habitat area with area (sf) noted for each.		CIV
			**Final Design		Option 2: Percentage calculation of restored/preserved habitat to total site area. List of drawings and specification references that convey restoration planting requirements.		CIV
SS5.2		Site Development: Maximize Open Space	Final Design		Option 2: LEED site plan drawing delineating boundary of vegetated open space adjacent to building with areas of building footprint and designated open space noted.		CIV
			**Final Design		Delineation and labeling of "LEED Project site boundary" on site plan.		CIV
SS6.1		Stormwater Design: Quantity Control	Final Design		Statement indicating which option for compliance applies.		CIV
			**Final Design		Delineation and labeling of "LEED Project site boundary" on site plan.		CIV
			Final Design		Option 1: Indicate pre-development and post-development runoff rate(cfs) and runoff quantity (cf) -OR - Narrative describing site conditions, measures and controls to be implemented to prevent excessive stream velocities and erosion.		CIV
			Final Design		Option 2: Indicate pre-development and post-development runoff rate(cfs) and runoff quantity (cf). Indicate percent reduction in each.		CIV
SS6.2		Stormwater Design: Quality Control	Final Design		For non-structural controls, list all BMPs used and, for each, describe the function of the BMP and indicate the percent annual rainfall treated. List all structural controls and, for each, describe the pollutant removal and indicate the percent annual rainfall treated.		CIV
			**Final Design		Delineation and labeling of "LEED Project site boundary" on site plan.		CIV
SS7.1		Heat Island Effect: Non-Roof	**Final Design		LEED site plan drawing indicating locations and quantities of each paving type, including areas of shaded pavement. Percentage calculation indicating percentage of reflective/shaded/open grid area.		CIV
			**Final Design		Delineation and labeling of "LEED Project site boundary" on site plan.		CIV

LEED Credit Paragraph	Contractor Check Here if Credit is Claimed	**LEED-NC v3 Submittals (OCT09)**		Provide for Credit Audit Only		Date Submitted (to be filled in by Contractor)	Government Reviewer's Use
PAR		**FEATURE**	**DUE AT**		**REQUIRED DOCUMENTATION**	**DATE**	**REV**
SS7.2		Heat Island Effect: Roof	Final Design		Option 1: Percentage calculation indicating percentage of SRI compliant roof area. List of drawings and specification references that convey SRI requirements and roof slopes.		ARC
			Final Design		Option 1: List of specified roof materials indicating, for each, type, manufacturer, product name and identification if known, SRI value and roof slope.		ARC
			**Closeout		Option 1: List of installed roof materials indicating, for each, manufacturer, product name and identification, SRI value and roof slope.		PE
			Closeout	X	Option 1: Manufacturer published product data or certification confirming SRI		PE
			Final Design		Option 2: Percentage calculation indicating percentage of vegetated roof area.		ARC
			Final Design		Option 3: Combined reflective and green roof calculation.		ARC
			Final Design		Option 3: List of specified roof materials indicating, for each, type, manufacturer, product name and identification if known, SRI value and roof slope.		ARC
			**Closeout		Option 3: List of installed roof materials indicating, for each, manufacturer, product name and identification, SRI value and roof slope.		PE
			Closeout	X	Option 3: Manufacturer published product data or certification confirming SRI		PE
SS8		Light Pollution Reduction	Final Design		Interior Lighting: List of drawings and specification references that convey interior lighting requirements (location and type of all installed interior lighting, location of non-opaque exterior envelope surfaces, allowing confirmation that maximum candela value from interiorfixtures does not intersect non-opaque building envelope surfaces). - OR - List of drawings and specification references that show automatic lighting controls compliance with credit requirement.		ELEC
			**Final Design		Delineation and labeling of "LEED Project site boundary" on site plan.		ELEC
			Final Design		Exterior Lighting: List of drawings and specification references that convey exterior lighting requirements (location and type of all site lighting and building façade/landscape lighting).		ELEC
			Final Design		Exterior Site Lighting Power Density (LPD): Tabulation for exterior site lighting indicating, for each location identification or description, units of measure, area or distance of the location, actual LPD using units consistent with ASHRAE 90.1, and the ASHRAE allowable LPD for that type of location. Percentage calculation of actual versus allowable LPD for all site lighting.		ELEC
			Final Design		Exterior Building Facade/Landscape Lighting Power Density (LPD): Tabulation for exterior building facade/landscape lighting indicating, for each location identification or description, units of measure, area or distance of the location, actual LPD using units consistent with ASHRAE 90.1, and the ASHRAE allowable LPD for that type of location. Percentage calculation of actual versus allowable LPD for all building facade/landscape lighting.		ELEC
			Final Design		Exterior Lighting IESNA Zone: Indicate which IESNA zone is applicable to the project.		ELEC
			Final Design		Exterior Lighting Site Lumen table indicating, for each fixture type, quantity installed, initial lamp lumens per luminaire, initial lamp lumens above 90 degrees from Nadir, total lamp lumens and total lamp lumens above 90 degrees. Percentage of site lamp lumens above 90 degrees from nadir to total lamp lumens.		ELEC
			Final Design		Exterior Lighting Narrative describing analysis used for addressing requirements for light trespass at site boundary and beyond.		ELEC
CATEGORY 2 – WATER EFFICIENCY							
WEPR1		Water Use Reduction: 20% Reduction	Final Design		Statement confirming which occupancy breakdown applies (default or special). For special occupancy breakdown, indicate source and explanation for ratio.		MEC
			Final Design		Occupancy calculation including male/female numbers for FTEs, visitors, students, customers, residential and other type occupants/users		MEC
			Final Design		Statement indicating percent of male restrooms with urinals. Statement indicating annual days of operation.		MEC

LEED Credit Paragraph	Contractor Check Here if Credit is Claimed	LEED-NC v3 Submittals (OCT09)		Provide for Credit Audit Only		Date Submitted (to be filled in by Contractor)	Government Reviewer's Use
PAR		**FEATURE**	**DUE AT**		**REQUIRED DOCUMENTATION**	**DATE**	**REV**
			Final Design		Baseline flush fixture calculation spreadsheet indicating, for each fixture type, gender, flush rate, daily uses per person for each occupant type identified in occupancy calculation and annual baseline flush fixture water usage.		MEC
			Final Design		Design case flush fixture calculation spreadsheet indicating, for each fixture type, gender, fixture manufacturer, fixture model number, flush rate, percent of occupants using this fixture type, daily uses per person for each occupant type identified in occupancy calculation and annual design case flush fixture water usage.		MEC
			Closeout	X	Manufacturer published product data or certification confirming fixture water usage.		PE
WE1.1		Water Efficient Landscaping: Reduce by 50%	Final Design		Statement indicating which option for compliance applies.		CIV
			**Final Design		Delineation and labeling of "LEED Project site boundary" on site plan.		CIV
			Final Design		Calculation indicating, for baseline and design case, total water applied, total potable water applied, total non-potable water applied. Design case percent potable water reduction. If nonpotable water is used, indicate source of nonpotable water.		CIV
			Final Design		List of landscape plan drawings.		CIV
			Final Design		Narrative describing landscaping and irrigation design strategies, including water use calculation methodology used to determine savings and, if non-potable water is used, specific information about source and available quantity.		CIV
WE1.2		Water Efficient Landscaping: No Potable Water Use or No Irrigation	Same as WE1.1		Same as WE1.1		CIV
WE2		Innovative Wastewater Technologies	Final Design		Statement confirming which option for compliance applies.		MEC
			Final Design		Statement confirming which occupancy breakdown applies (default or special). For special occupancy breakdown, indicate source and explanation for ratio.		MEC
			Final Design		Occupancy calculation including male/female numbers for FTEs, visitors, students, customers, residential and other type occupants/users		MEC
			Final Design		Statement indicating percent of male restrooms with urinals. Statement indicating annual days of operation.		MEC
			Final Design		Baseline flush fixture calculation spreadsheet indicating, for each fixture type, gender, flush rate, daily uses per person for each occupant type identified in occupancy calculation and annual baseline flush fixture water usage.		MEC
			Final Design		Design case flush fixture calculation spreadsheet indicating, for each fixture type, gender, fixture manufacturer, fixture model number, flush rate, percent of occupants using this fixture type, daily uses per person for each occupant type identified in occupancy calculation and annual design case flush fixture water usage.		MEC
			Final Design		Option 1: If onsite non-potable water is used, identify source(s), indicate annual quantity from each source and indicate total annual quantity from all onsite non-potable water sources.		MEC
			Final Design		Option 1: Summary calculation indicating baseline annual water consumption, design case annual water consumption, non-potable annual water consumption and total percentage annual water savings.		MEC
			Final Design		Option 2: Statement confirming on-site treatment of all generated wastewater to tertiary standards and all treated wastewater is either infiltrated or used on-site.		MEC
			Final Design		Option 2: List of drawing and specification references that convey design of on-site wastewater treatment features.		CIV
			Final Design		Option 2: On-site water treatment quantity calculation indicating all on-site wastewater source(s), annual quantity treated, annual quantity infiltrated and annual quantity re-used on site from each source and totals for annual quantity treated, annual quantity infiltrated and annual quantity re-used on site from all sources.		CIV
			Final Design		Option 2: Wastewater summary calculation indicating design case annual flush fixture water usage, annual on-site water treatment and percentage sewage convyance reduction.		MEC
			Final Design		Narrative describing project strategy for reduction of potable water use for sewage conveyance, including specific information on reclaimed water usage and treated wastewater usage.		MEC
WE3		Water Use Reduction: 30% - 40% Reduction	Same as WEPR1		Same as WEPR1		MEC
CATEGORY 3 – ENERGY AND ATMOSPHERE							

LEED Credit Paragraph	Contractor Check Here if Credit is Claimed	**LEED-NC v3 Submittals (OCT09)**		Provide for Credit Audit Only		Date Submitted (to be filled in by Contractor)	Government Reviewer's Use
PAR		**FEATURE**	**DUE AT**		**REQUIRED DOCUMENTATION**	**DATE**	**REV**
EAPR1		Fundamental Commissioning of the Building Energy Systems (PREREQUISITE)	**Final Design		**Owner's Project Requirements document		ALL
			**Final Design		**Basis of Design document for commissioned systems		MEC, ELEC
			**Final Design		**Commissioning Plan		MEC, ELEC
			Closeout		Statement confirming all commissioning requirements have been incorporated into construction documents.		PE
			Closeout		Commissioning Report		PE
EAPR2		Minimum Energy Performance (PREREQUISITE)	Final Design		Statement listing the mandatory provisions of ASHRAE 90.1 that project meets relative to compliance with this prerequisite and indicating which compliance path was used.		MEC ELEC ARC
			Final Design		Statement indicating which compliance path option applies.		MEC
			Final Design		Option 1: Statement confirming simulation software capabilities and confirming assumptions and methodology.		MEC
			Final Design		Option 1: General information including simulation program, principal heating source, percent new construction and renovation, weather file, climate zone and Energy Star Target Finder score.		MEC
			Final Design		Option 1: Space summary listing, for each building use, the conditioned area, unconditioned area and total area and include total area for each category		MEC
			Final Design		Option 1: List of all simulation output advisory message data and show difference between baseline and proposed design		MEC
			Final Design		Option 1: Comparison summary for energy model inputs including description of baseline and design case energy model inputs, showing both by element type		MEC
			Final Design		Option 1: Energy type summary lising, for each energy type, utility rate description, units of energy and units of demand		MEC
			Final Design		Option 1: Statement indicating whether project uses on-site renewable energy. If yes, list all sources and indicate, for each source, backup energy type, annual energy generated, rated capacity and renewable energy cost		MEC
			Final Design		Option 1: If analysis includes exceptional calculation methods, statement describing how exceptional calculation measure cost savings is determined		MEC
			Final Design		Option 1: If analysis includes exceptional calculation methods, for each exceptional calculation method indicate energy types and, for each energy type, annual energy savings, annual cost savings, and brief descriptive narrative		MEC
			Final Design		Option 1: Baseline performance rating compliance report table indicating, for each energy end use, whether it is a process load, energy type, annual and peak energy demand for all four orientations. For each orientation indicate total annual energy use for each orientation and total annual process energy use.		MEC
			Final Design		Option 1: Baseline energy cost table indicating, for each energy type, annual cost for all four orientations and building total energy cost.		MEC
			Final Design		Option 1: Proposed Design performance rating compliance report table indicating, for each energy end use, whether it is a process load, energy type, annual and peak energy demand, baseline annual and peak energy demand and percent savings. Indicate total annual energy use and total annual process energy use for both proposed design and baseline and percent savings.		MEC
			Final Design		Option 1: Proposed Design energy cost table indicating, for each energy type, annual cost for all four orientations and building total energy cost.		MEC
			Final Design		Option 1: Energy cost and consumption by energy type report indicating, for each energy type, proposed design and baseline annual use and annual cost, percent savings annual use and annual cost. Indicate for renewable energy annual energy generated and annual cost. Indicate exceptional calculations annual energy savings and annual cost savings. Indicate building total annual energy use, annual energy cost for proposed design and baseline and indicate percent savings annual energy use and annual energy cost.		MEC

LEED Credit Paragraph	Contractor Check Here if Credit is Claimed	LEED-NC v3 Submittals (OCT09)		Provide for Credit Audit Only		Date Submitted (to be filled in by Contractor)	Government Reviewer's Use
PAR		**FEATURE**	**DUE AT**		**REQUIRED DOCUMENTATION**	**DATE**	**REV**
			Final Design		Option 1: Compliance summaries from energy simulation software. If software does not produce compliance summaries provide output summaries and example input summaries for baseline and proposed design supporting data in the tables. Output summaries must include simulated energy consumption by end use and total energy use and cost by energy type. Example input summaries should represent most common systems and must include occupancy, use pattern, assumed envelope component sizes and descriptive features and assumed mechanical equipment types and descriptive features		MEC
			Final Design		Option 1: Energy rate tariff from project energy providers (only if not using LEED Reference Guide default rates)		MEC
EAPR3		Fundamental Refrigerant Management (PREREQUISITE)	Final Design		Statement indicating which option for compliance applies.		MEC
			Final Design		Option 2: Narrative describing phase out plan, including specific information on phase out dates and refrigerant quantities.		MEC
EA1		Optimize Energy Performance	Final Design		Statement indicating which compliance path option applies.		MEC
			Final Design		Option 1: Statement confirming simulation software capabilities and confirming assumptions and methodology.		MEC
			Final Design		Option 1: General information including simulation program, principal heating source, percent new construction and renovation, weather file, climate zone and Energy Star Target Finder score.		MEC
			Final Design		Option 1: Space summary listing, for each building use, the conditioned area, unconditioned area and total area and include total area for each category		MEC
			Final Design		Option 1: List of all simulation output advisory message data and show difference between baseline and proposed design		MEC
			Final Design		Option 1: Comparison summary for energy model inputs including description of baseline and design case energy model inputs, showing both by element type		MEC
			Final Design		Option 1: Energy type summary lising, for each energy type, utility rate description, units of energy and units of demand		MEC
			Final Design		Option 1: Statement indicating whether project uses on-site renewable energy. If yes, list all sources and indicate, for each source, backup energy type, annual energy generated, rated capacity and renewable energy cost		MEC
			Final Design		Option 1: If analysis includes exceptional calculation methods, statement describing how exceptional calculation measure cost savings is determined		MEC
			Final Design		Option 1: If analysis includes exceptional calculation methods, for each exceptional calculation method indicate energy types and, for each energy type, annual energy savings, annual cost savings, and brief descriptive narrative		MEC
			Final Design		Option 1: Baseline performance rating compliance report table indicating, for each energy end use, whether it is a process load, energy type, annual and peak energy demand for all four orientations. For each orientation indicate total annual energy use for each orientation and total annual process energy use.		MEC
			Final Design		Option 1: Baseline energy cost table indicating, for each energy type, annual cost for all four orientations and building total energy cost.		MEC
			Final Design		Option 1: Proposed Design performance rating compliance report table indicating, for each energy end use, whether it is a process load, energy type, annual and peak energy demand, baseline annual and peak energy demand and percent savings. Indicate total annual energy use and total annual process energy use for both proposed design and baseline and percent savings.		MEC
			Final Design		Option 1: Proposed Design energy cost table indicating, for each energy type, annual cost for all four orientations and building total energy cost.		MEC
			Final Design		Option 1: Energy cost and consumption by energy type report indicating, for each energy type, proposed design and baseline annual use and annual cost, percent savings annual use and annual cost. Indicate for renewable energy annual energy generated and annual cost. Indicate exceptional calculations annual energy savings and annual cost savings. Indicate building total annual energy use, annual energy cost for proposed design and baseline and indicate percent savings annual energy use and annual energy cost.		MEC

LEED Credit Paragraph	Contractor Check Here if Credit is Claimed	LEED-NC v3 Submittals (OCT09)		Provide for Credit Audit Only		Date Submitted (to be filled in by Contractor)	Government Reviewer's Use
PAR		**FEATURE**	**DUE AT**		**REQUIRED DOCUMENTATION**	**DATE**	**REV**
			Final Design		Option 1: Compliance summaries from energy simulation software. If software does not produce compliance summaries provide output summaries and example input summaries for baseline and proposed design supporting data in the tables. Output summaries must include simulated energy consumption by end use and total energy use and cost by energy type. Example input summaries should represent most common systems and must include occupancy, use pattern, assumed envelope component sizes and descriptive features and assumed mechanical equipment types and descriptive features		MEC
			Final Design		Option 1: Energy rate tariff from project energy providers (only if not using LEED Reference Guide default rates)		MEC
EA2.1		On-Site Renewable Energy	Final Design		Statement indicating which compliance path option applies.		ELEC
			Final Design		List all on-site renewable energy sources and indicate, for each source, backup energy type, annual energy generated, rated capacity and renewable energy cost. Indicate total annual energy use (all sources), total annual energy cost (all sources) and percent renewable energy cost.		ELEC MEC
			Final Design		Option 1: Indicate, for renewable energy,proposed design total annual energy generated and annual cost.		ELEC MEC
			Final Design		Option 2: Indicate CBECS building type and building gross area. Provide the following CBECS data: median annual electrical intensity, median annual non-electrical fuel intensity, average electric energy cost, average non-electric fuel cost, annual electric energy use and cost, annual non-electric fuel use and cost.		ELEC MEC
			Final Design		Option 2: Narrative describing renewable systems and explaining calculation method used to estimate annual energy generated, including factors influencing performance.		ELEC MEC
EA2.2		On-Site Renewable Energy	Same as EA2.1		Same as EA2.1		ELEC MEC
EA2.3		On-Site Renewable Energy	Same as EA2.1		Same as EA2.1		ELEC MEC
EA3		Enhanced Commissioning	**Final Design		**Owner's Project Requirements document (OPR)		ALL
			**Final Design		**Basis of Design document for commissioned systems (BOD)		ELEC MEC
			**Final Design		**Commissioning Plan		ELEC MEC
			Closeout		Statement confirming all commissioning requirements have been incorporated into construction documents.		PE
			Closeout		**Commissioning Report		PE
			**Final Design		Statement by CxA confirming Commissioning Design Review		
			Closeout		Statement by CxA confirming review of Contractor submittals for compliance with OPR and BOD		PE
			Closeout		**Systems Manual		PE
			Closeout		Statement by CxA confirming completion of O&M staff and occupant training		PE
			Closeout		**Scope of work for post-occupancy review of building operation, including plan for resolution of outstanding issues		PE
			**Predesign		Statement confirming CxA qualifications and contractual relationships relative to work on this project, demonstrating that CxA is an independent third party.		MEC
EA4		Enhanced Refrigerant Management	Final Design		Refrigerant impact calculation table with all building data and calculation values as shown in LEED 2009 Reference Guide Example Calculations		MEC
			Final Design		Narrative describing any special circumstances or explanatory remarks		
			Closeout	X	Cut sheets highlighting refrigerant data for all HVAC components.		PE
EA5		Measurement & Verification	Closeout		Statement indicating which compliance path option applies.		PE
			Closeout		Measurement and Verification Plan including Corrective Action Plan		PE
			Closeout		**Scope of work for post-occupancy implementation of M&V plan including corrective action plan.		PE
EA6		Green Power	Closeout		Statement indicating which compliance path option applies.		PE
			Closeout		Option 1: Indicate proposed design total annual electric energy usage		PE
			Closeout		Option 2: Indicate actual total annual electric energy usage		PE
			Closeout		Option 3: Calculation indicating building type, total gross area, median electrical intensity and annual electric energy use		PE

LEED Credit Paragraph	Contractor Check Here if Credit is Claimed	**LEED-NC v3 Submittals (OCT09)**		Provide for Credit Audit Only		Date Submitted (to be filled in by Contractor)	Government Reviewer's Use
PAR		**FEATURE**	**DUE AT**		**REQUIRED DOCUMENTATION**	**DATE**	**REV**
			Closeout		Green power provider summary table indicating, for each purchase type, provider name, annual quantity green power purchased and contract term. Indicate total annual green power use and indicate percent green power		PE
			Closeout		Narrative describing how Green Power or Green Tags are purchased		PE
CATEGORY 4 – MATERIALS AND RESOURCES							
MRPR1		Storage & Collection of Recyclables (PREREQUISITE)	Final Design		Statement confirming that recycling area will accommodate recycling of plastic, metal, paper, cardboard and glass. Narrative indicating any other materials addressed and coordination with pickup.		ARC
MR1.1		Building Reuse: Maintain 55% of Existing Walls, Floors & Roof	**Final Design		If project includes a building addition, confirm that area of building addition does not exceed 2x the area of the existing building.		ARC
			**Final Design		Spreadsheet listing, for each building structural/envelope element, the existing area and reused area. Total percent reused.		ARC
MR1.2		Building Reuse: Maintain 75% of Existing Walls, Floors & Roof	Same as MR1.1		Same as MR1.1		ARC
MR1.3		Building Reuse: Maintain 95% of Existing Walls, Floors & Roof	Same as MR1.1		Same as MR1.1		ARC
MR1.4		Building Reuse: Maintain 50% of Interior Non-Structural Elements	**Final Design		If project includes a building addition, confirm that area of building addition does not exceed 2x the area of the existing building.		ARC
			**Final Design		Spreadsheet listing, for each building interior non-structural element, the existing area and reused area. Total percent reused.		ARC
MR2.1		Construction Waste Management: Divert 50% From Disposal	**Preconstruction		Waste Management Plan		PE
			**Construction Quarterly and Closeout		Spreadsheet calculations indicating material description, disposal/diversion location (or recycling hauler), weight, total waste generated, total waste diverted, diversion percentage		PE
			**Construction Quarterly and Closeout		Receipts/tickets for all items on spreadsheet		PE
MR2.2		Construction Waste Management: Divert 75% From Disposal	Same as MR2.1		Same as MR2.1		PE
MR3.1		Materials Reuse: 5%	Closeout		Statement indicating total materials value and whether default or actual.		PE
			Closeout		Spreadsheet calculations indicating, for each reused/salvaged material, material description, source or vendor, cost. Total reused/salvaged materials percentage.		PE
MR3.2		Materials Reuse: 10%	Same as MR3.1		Same as MR3.1		PE
MR4.1		Recycled Content: 10% (post-consumer + 1/2 pre-consumer)	Closeout		Statement indicating total materials value and whether default or actual.		PE
			Closeout		Spreadsheet calculations indicating, for each recycled content material, material name/description, manufacturer, cost, post-consumer recycled content percent, pre-consumer recycled content percent, source of recycled content data. Total post-consumer content materials cost, total pre-consumer content materials cost, total combined recycled content materials cost, recycled content materials percentage.		PE
			Final Design or NLT Preconstruction		**Purchasing Plan consisting of spreadsheet indicated above, filled in with estimated quantities to show strategy for achieving goal.		PE
			Closeout	X	Manufacturer published product data or certification, confirming recycled content percentages in spreadsheet		PE
MR4.2		Recycled Content: 20% (post-consumer + 1/2 pre-consumer)	Same as MR4.1		Same as MR4.1		PE
MR5.1		Regional Materials:10% Extracted, Processed & Manufactured Regionally	Closeout		Statement indicating total materials value and whether default or actual.		PE
			Closeout		Spreadsheet calculations indicating, for each regional material, material name/description, manufacturer, cost, percent compliant, harvest distance, manufacture distance, source of manufacture and harvest location data. Total regional materials cost, regional materials percentage.		PE
			Preconstruction		**Purchasing Plan consisting of spreadsheet indicated above, filled in with estimated quantities to show strategy for achieving goal.		PE
			Closeout	X	Manufacturer published product data or certification confirming regional material percentages in spreadsheet		PE

LEED Credit Paragraph	Contractor Check Here if Credit is Claimed	**LEED-NC v3 Submittals (OCT09)**		Provide for Credit Audit Only		Date Submitted (to be filled in by Contractor)	Government Reviewer's Use
PAR		**FEATURE**	**DUE AT**		**REQUIRED DOCUMENTATION**	**DATE**	**REV**
MR5.2		Regional Materials:20% Extracted, Processed & Manufactured Regionally	Same as MR5.1		Same as MR5.1		PE
MR6		Rapidly Renewable Materials	Closeout		Statement indicating total materials value and whether default or actual.		PE
			Closeout		Spreadsheet calculations indicating, for each rapidly renewable material, material name/description, manufacturer, cost, rapidly renewable content percent, rapidly renewable product value. Total rapidly renewable product value, rapidly renewable materials percentage.		PE
			Final Design		**Purchasing Plan consisting of spreadsheet indicated above, filled in with estimated quantities to show strategy for achieving goal.		ARC
			Closeout	X	Manufacturer published product data or certification confirming rapidly renewable material percentages in spreadsheet		PE
MR7		Certified Wood	Closeout		Statement indicating total materials value and whether default or actual.		PE
			Closeout		Spreadsheet calculations indicating, for each certified wood material, material name/description, vendor, cost, wood component percent, certified wood percent of wood component, FSC chain of custody certificate number. Total certified wood product value, certified wood materials percentage.		PE
			Final Design or NLT Preconstruction		**Purchasing Plan consisting of spreadsheet indicated above, filled in with estimated quantities to show strategy for achieving goal.		PE
			Closeout	X	Vendor invoices, FSC chain of custody certificates and anufacturer published product data or certification confirming all certified wood materials percentages in spreadsheet.		PE
INDOOR ENVIRONMENTAL QUALITY							
EQPR1		Minimum IAQ Performance (PREREQUISITE)	Final Design		Statement indicating which option for compliance applies, stating applicable criteria/requirement, and confirming that project has been designed to meet the applicable requirements.		MEC
			Final Design		Narrative describing the project's ventilation design, including specifics about fresh air intake volumes and special considerations.		MEC
EQPR2		Environmental Tobacco Smoke (ETS) Control (PREREQUISITE)	Final Design		Statement indicating which option for compliance applies, stating applicable criteria/requirement, and confirming that project has been designed to meet the applicable requirements.		ARC
			Final Design		List of drawing and specification references that convey conformance to applicable requirements (signage, exhaust system, room separation details, etc).		ARC
EQ1		Outdoor Air Delivery Monitoring	Final Design		Statement indicating which option for compliance applies and confirming that project has been designed to meet the applicable requirements.		MEC
			Final Design		List of drawing and specification references that convey conformance to applicable requirements.		MEC
			Final Design		Narrative describing the project's ventilation design and CO2 monitoring system, including specifics about monitors, operational parameters and setpoints.		MEC
			Closeout	X	Cut sheets for CO2 monitoring system.		PE
EQ2		Increased Ventilation	Final Design		Statement indicating which option for compliance applies and confirming that project has been designed to meet the applicable requirements.		MEC
			Final Design		Narrative describing the project's ventilation design, including specifics about zone fresh air intake volumes and demonstrating compliance.		MEC
			Final Design		Option 2: Narrative describing design method used for determining natural ventilation design, including calculation methodology/model results and demonstrating compliance.		MEC
			Final Design		List of drawing and specification references that convey conformance to applicable requirements.		MEC
EQ3.1		Construction IAQ Management Plan: During Construction	**Preconstruction		Construction IAQ Management Plan		PE
			Closeout		Statement confirming whether air handling units were operated during construction		PE
			Closeout		Dated jobsite photos showing examples of IAQ management plan practices being implemented. Label photos to indicate which practice they demonstrate. Minimum one photo of each practice at each building.		PE

LEED Credit Paragraph	Contractor Check Here if Credit is Claimed	**LEED-NC v3 Submittals (OCT09)**		Provide for Credit Audit Only		Date Submitted (to be filled in by Contractor)	Government Reviewer's Use
PAR		**FEATURE**	**DUE AT**		**REQUIRED DOCUMENTATION**	**DATE**	**REV**
			Closeout		Spreadsheet indicating, for each filter installed during construction, the manufacturer, model number, MERV rating, location installed, and if it was replaced immediately prior to occupancy.		PE
EQ3.2		Construction IAQ Management Plan: Before Occupancy	**Preconstruction		Construction IAQ Management Plan		PE
			Closeout		Statement indicating which option for compliance applies and confirming that required activities have occurred that meet the applicable requirements.		PE
			Closeout		Option 1a: Narrative describing the project's flushout process, including specifics about temperature, airflow and duration, special considerations (if any) and demonstrating compliance.		PE
			Closeout		Option 1b: Narrative describing the project's pre-occupancy and post-occupancy flushout processes, including specifics about temperature, airflow and duration, special considerations (if any) and demonstrating compliance.		PE
			Closeout		Option 2: Narrative describing the project's IAQ testing process, including specifics about contaminants tested for, locations, remaining work at time of test, retest parameters and special considerations (if any).		PE
			Closeout		Option 2: IAQ testing report demonstrating compliance.		PE
EQ4.1		Low Emitting Materials: Adhesives & Sealants	Closeout		Spreadsheet indicating, for each applicable indoor adhesive, sealant and sealant primer used, the manufacturer, product name/model number, VOC content, LEED VOC limit, and source of VOC data.		PE
			Closeout		Spreadsheet indicating, for each applicable indoor aerosol adhesive, the manufacturer, product name/model number, VOC content, LEED VOC limit, and source of VOC data - OR - Statement confirming no indoor aerosol adhesives were used for the project.		PE
			Closeout	X	Manufacturer published product data or certification confirming material VOCs in spreadsheet		PE
EQ4.2		Low Emitting Materials: Paints & Coatings	Closeout		Spreadsheet indicating, for each applicable indoor paint and coating used, the manufacturer, product name/model number, VOC content, LEED VOC limit, and source of VOC data.		PE
			Closeout		Spreadsheet indicating, for each applicable indoor anti-corrosive/anti-rust paint and coating used, the manufacturer, product name/model number, VOC content, LEED VOC limit, and source of VOC data - OR - Statement confirming no indoor anti-corrosive/anti-rust paints were used for the project .		PE
			Closeout	X	Manufacturer published product data or certification confirming material VOCs in spreadsheet		PE
EQ4.3		Low Emitting Materials: Flooring Systems	Closeout		Spreadsheet indicating, for each indoor flooring system used, the manufacturer, product name/model number, if it meets LEED requirement (yes/no) and source of LEED compliance data.		PE
			Closeout		Spreadsheet indicating, for each indoor carpet cushion used, the manufacturer, product name/model number, if it meets LEED requirement (yes/no) and source of LEED compliance data - OR - Statement confirming no indoor carpet cushion was used for the project.		PE
			Closeout	X	Manufacturer published product data or certification confirming material compliance label in spreadsheet		PE
EQ4.4		Low Emitting Materials: Composite Wood & Agrifiber Products	Closeout		Spreadsheet indicating, for each indoor composite wood and agrifiber product used, the manufacturer, product name/model number, if it contains added urea formaldehyde (yes/no) and source of LEED compliance data.		PE
			Closeout	X	Manufacturer published product data or certification confirming material urea formaldehyde in spreadsheet		PE
EQ5		Indoor Chemical & Pollutant Source Control	Closeout		Spreadsheet indicating, for each permanent entryway system used, the manufacturer, product name/model number and description of system.		PE
			Final Design		List of drawing and specification references that convey locations and installation methods for entryway systems.		ARC
			Final Design		Spreadsheet indicating, for each chemical use area, the room number, room name, description of room separation features (walls, floor/ceilings, openings) and pressure differential from surrounding spaces with doors closed - OR - Statement confirming that project includes no chemical use areas and that no hazardous cleaning materials are needed for building maintenance.		ARC MEC
			Final Design		If project includes chemical use areas: List of drawing and specification references that convey locations of chemical use areas, room separation features and exhaust system.		ARC MEC

LEED Credit Paragraph	Contractor Check Here if Credit is Claimed	**LEED-NC v3 Submittals (OCT09)**		Provide for Credit Audit Only		Date Submitted (to be filled in by Contractor)	Government Reviewer's Use
PAR		**FEATURE**	**DUE AT**		**REQUIRED DOCUMENTATION**	**DATE**	**REV**
			Final Design		If project includes places where water and chemical concentrate mixing occurs: List of drawing and specification references that convey provisions for containment of hazardous liquid wastes OR - Statement confirming that project includes no places where water and chemical concentrate mixing occurs.		ARC MEC
			Closeout		If project includes chemical use areas: Spreadsheet indicating, for AHUs/mechanical ventilation equipment serving occupied areas, the manufacturer, model number, MERV rating, location installed, and if it was replaced immediately prior to occupancy (yes/no) - OR - Statement confirming that project does not use mechanical equipment for ventilation of occupied areas.		PE
EQ6.1		Controllability of Systems: Lighting	Final Design		Calculation indicating total number of individual workstations, number of workstations with individual lighting controls and the percentage of workstations with individual lighting controls.		ELEC
			Final Design		For each shared multi-occupant space, provide a brief description of lighting controls.		ELEC
			Final Design		Narrative describing lighting control strategy, including type and location of individual controls and type and location of controls in shared multi-occupant spaces.		ELEC
EQ6.2		Controllability of Systems: Thermal Comfort	Final Design		Calculation indicating total number of individual workstations, number of workstations with individual thermal comfort controls and the percentage of workstations with individual thermal comfort controls.		MEC
			Final Design		For each shared multi-occupant space, provide a brief description of thermal comfort controls.		MEC
			Final Design		Narrative describing thermal comfort control strategy, including type and location of individual and shared multi-occupant controls.		MEC
EQ7.1		Thermal Comfort: Design	Final Design		Design criteria spreadsheet indicating, for spring, summer, fall and winter, maximum indoor space design temperature, minimum indoor space design temperature and maximum indoor space design humidity.		MEC
			Final Design		Narrative describing method used to establish thermal comfort control conditions and how systems design addresses the design criteria, including compliance with the referenced standard.		MEC
EQ7.2		Thermal Comfort: Verification	Final Design		Narrative describing the scope of work for the thermal comfort survey, including corrective action plan development		MEC
			Final Design		List of drawing and specification references that convey permanent monitoring system.		MEC
EQ8.1		Daylight & Views: Daylight 75% of Spaces	Final Design		Option 2: Table indicating all regularly occupied spaces with space area and space area with compliant daylight zone. Sum of regularly occupied areas and regularly occupied areas withcompliant daylight zone. Percentage calculation of areas withcompliant daylight zone to total regularly occupied areas.		ARC
			Final Design		Option 1: Simulation model method, software and output data		ELEC
			Final Design		Option 1: Table indicating all regularly occupied spaces with space area, space area with minimum 25 footcandles daylighting illumination, and method of providing glare control. Sum of regularly occupied areas and regularly occupied areas with 25 fc daylighting. Percentage calculation of areas with 25 fc daylighting to total regularly occupied areas.		ELEC
			Final Design		For all occupied spaces excluded from the calculation, provide narrative indicating reasons for excluding the space.		ARC
			Final Design		List of drawing and specification references that convey exterior glazed opening head and sill heights, glazing performance properties and glare control/sunlight redirection devices.		ARC
			Closeout	X	Manufacturer published product data or certification confirming glazing Tvis in spreadsheet		PE
EQ8.2		Daylight & Views: Views for 90% of Spaces	Final Design		Table indicating all regularly occupied spaces with space area and space area with access to views. Sum of regularly occupied areas and regularly occupied areas with access to views. Percentage calculation of areas with views to total regularly occupied areas.		ARC
			Final Design		For all occupied spaces excluded from the calculation, provide narrative indicating reasons for excluding the space.		ARC
			Final Design		LEED Floor plan drawings showing line of sight diagramming of views areas in each regularly occupied space. List of drawing/specification references that convey exterior glazed opening head and sill heights.		ARC
INNOVATION & DESIGN PROCESS							

LEED Credit Paragraph	Contractor Check Here if Credit is Claimed	**LEED-NC v3 Submittals (OCT09)**		Provide for Credit Audit Only		Date Submitted (to be filled in by Contractor)	Government Reviewer's Use
PAR		**FEATURE**	**DUE AT**		**REQUIRED DOCUMENTATION**	**DATE**	**REV**
IDc1.1		Innovation in Design	Final Design		Narrative decribing intent, requirement for credit, project approach to the credit. List of drawings and specification references that convey implementation of credit. All other documentation that validates claimed credit.		
IDc1.2		Innovation in Design	Final Design				
IDc1.3		Innovation in Design	Final Design				
IDc1.4		Innovation in Design	Final Design				
IDc2		LEED Accredited Professional	Final Design		Narrative indicating name of LEED AP, company name of LEED AP, description of LEED AP's role and responsiblilities in the project.		ARC

ATTACHMENT F
Version 02-03-2010

BUILDING INFORMATION MODELING REQUIREMENTS

1.0 Section 1 - Submittal Format

1.1. Design Deliverables. Develop all designs using Building Information Modeling (BIM) and Computer Aided Design (CAD) software. Design submittal drawings shall be 22" x 36" size, suitable for half-size scaled reproduction.

2.0 Section 2 – Design Requirements

2.1. BIM Model and Facility Data. Contractor shall use BIM application(s) and software(s) to develop project designs. "Facility Data" is defined as associated intelligent attribute data. The "Model" is defined as 3D graphics that includes Facility Data and output as described in the paragraph 'Output' below. Contractors will use the Model to produce accurate Construction Documents. All submitted BIM Models and associated Facility Data shall be fully compatible with XM edition with associated USACE Bentley BIM Workspace

2.1.1. Reference. Refer to ERDC TR-06-10, "U.S. Army Corps of Engineers Building Information Modeling Road Map" from the CAD/BIM Technology Center website for more information on the USACE BIM implementation goals.

2.2. Drawings. Deliver CAD files used for the creation of the Construction Documents Drawings per requirements in Section 01 33 16, the criteria of the USACE Savannah District, and as noted herein. Specification of a CAD file format for these Drawings does not limit which BIM application(s) or software(s) may be used for project development and execution.

2.2.1. IFC Support. The Contractor's selected BIM application(s) and software(s) must support the IFC (Industry Foundation Class - see www.iai-tech.org). Submit any deviations from or additions to the IFC property sets for any new spaces, systems, and equipment for Government approval.

2.2.2. Submittal Requirements. BIM submittals shall conform to the requirements of Sections 3 and 4 below.

2.2.3. BIM Project Execution Plan.

2.2.3.1. Develop a BIM Project Execution Plan ("Plan" or "PxP") documenting the BIM and analysis technologies selected for the Project Model (integrated with the AEC CAD Standard) from concept development through As-Builts as a design, production, coordination, construction, and documentation tool and the collaborative process by which it shall be executed. See Section 7 for additional guidance on developing the Plan.

2.2.4. BIM Requirements.

2.2.4.1. Facility Data. Develop the Facility Data consisting of a set of intelligent elements for the Model (e.g., doors, air handlers, electrical panels). This Facility Data shall include all material definitions and attributes that are necessary for the Project facility design and construction. Additional data in support of Section 6 Contractor Electives is encouraged.

2.2.4.2. Model Content. The Model and Facility Data shall include, at a minimum, the requirements of Section 4 below.

2.2.4.3. Model Granularity. Models may vary in level of detail for individual elements within a model, but at a minimum must include all features that would be included on a quarter inch (1/4" = 1'0") scaled drawing (e.g. at least 1/16th, 1/8th and 1/4th), or appropriately scaled civil drawings.

2.2.4.4. Output. Submitted CAD drawings (e.g., plans, elevations, sections, schedules, details, etc.) shall be derived (commonly known as extractions, views or sheets) and maintained from the submitted Model and Facility Data.

2.3. Quality Control. Implement quality control (QC) parameters for the Model, including:

2.3.1. Model Standards Checks. QC validation used to ensure that the Project Facility Data set has no undefined, incorrectly defined or duplicated elements. Report non-compliant elements and corrective action plan to correct non-compliant elements. Provide the government with detailed justification and request government approval for any non-compliant element which the contractor proposes to be allowed to remain in the Model.

2.3.2. CAD Standards Checks. QC checking performed to ensure that the fonts, dimensions, line styles, levels and other construction document formatting issues are followed per the A/E/C CADD Standard.

2.3.3. Other Parameters. Develop such other QC parameters as Contractor deems appropriate for the Project and provide to the Government for concurrence.

2.4. Design and Construction Reviews. Perform design and construction reviews at each submittal stage under Section 3 to test the Model, including:

2.4.1. Visual Checks. Check to ensure the design intent has been followed and that there are no unintended elements in the Model.

2.4.2. Interference Management Checks. Locate conflicting spatial data in the Model where two elements are occupying the same space. Log hard interferences (e.g., mechanical vs. structural or mechanical vs. mechanical overlaps in the same location) and soft interferences, (e.g., conflicts regarding equipment clearance, service access, fireproofing, insulation) in a written report and resolve.

2.4.3. IFC Coordination View. Provide an IFC Coordination View in IFC Express format for all deliverables. Provide exported property set data for all IFC supported named building elements.

2.4.4. Other Parameters. Develop such other Review parameters as the Contractor deems appropriate for the Project and provide to the Government for concurrence.

3.0 Section 3 – Design Stage Submittal Requirements

3.1. General Submittal Requirements.

3.1.1. Provide submittals in compliance with BIM Project Execution Plan deliverables at stages as described hereinafter.

3.1.2. At each Stage in Paragraphs 3.3 through 3.6, provide a Contractor-certified written report confirming that consistency checks as identified in Paragraphs 2.3 and 2.4 have been completed. This report shall be discussed as part of the review process and shall address cross-discipline interferences, if any.

3.1.3. At each Stage in Paragraphs 3.3 through 3.6, provide the Government with:

- The Model, Facility Data, and CAD Data files.

- A 3-D interactive review format of the Model in Bentley Navigator, Autodesk Navisworks, Adobe 3D PDF 7.0 (or later), Google Earth KMZ or other format per Plan requirements. The file format for reviews can change between submittals.

- A list of all submitted files. The list should include a description, directory, and file name for each file submitted. For all CAD sheets, include the sheet title and sheet number. Identify files that have been produced from the submitted Model and Facility Data.

3.1.4. The Government shall confirm acceptability of all submittals identified in Section 3 in coordination with the USACE Savannah BIM Manager

3.2. Initial Design Conference Submittal.

3.2.1. Submit a digital copy of the Plan where, in addition to Paragraph 3.1.4, the USACE Savannah District BIM Manager will confirm acceptability of the Plan or advise as to additional processes or activities necessary to be incorporated.

3.2.2. Within thirty (30) days after the approval of the Plan, conduct a demonstration to review the Plan for clarification, and to verify the functionality of Model technology workflow and processes. If modifications are required, the Contractor shall complete the modifications and resubmit the Plan and perform subsequent demonstration for Government acceptance. There will be no payment for design or construction until the Plan is acceptable to the Government. The Government may also withhold payment for design and construction for unacceptable performance in executing the approved Plan.

3.3. Interim Design Submittals.

3.3.1. BIM and CAD Data. The Model shall include the requirements identified in Paragraph 2.2.4 as applicable to the Interim Design package(s).

3.4. Final Design Submissions and Design Complete Submittals.

3.4.1. BIM and CAD Data. The Model shall include the requirements identified in Paragraph 2.2.4. Acceptance according to Paragraph 3.1.4 is required before commencement of construction, as described in Paragraph 3.7.6 of Section 01 33 16.

3.5. Submittals – Over-The-Shoulder Progress Reviews. Periodic quality control meetings or construction progress review meetings shall include quality control reviews on the implementation and use of the Model, including interference management and design change tracking information.

3.6. Final As-Builts BIM and CAD Data Submittal. Submit the final Model, Facility Data, and CAD files reflecting as-built conditions for Government Approval, as specified in Section 01 78 02.00 10, PROJECT CLOSEOUT.

4.0 Section 4 – BIM Model Minimum Requirements and Output

4.1. General Provisions. The deliverable Model shall be developed to include the systems described below as they would be built and the processes of installing them, and to reflect final as-built conditions. The deliverable model at the interim design stage and at the final design stage ("released for construction") shall be developed to include as many of the systems described below as are necessary and appropriate at that design stage.

4.2. Architectural/Interior Design. The Architectural systems Model may vary in level of detail for individual elements, but at a minimum must include all features that would be included on a quarter inch (1/4"=1'0") scaled drawing. Additional minimum Model requirements include:

4.2.1. Spaces. The Model shall include spaces defining accurate net square footage and net volume, and holding data for the room finish schedule for including room names and numbers. Include Programmatic Information provided by the Government or validated program to verify design space against programmed space, using this information to validate area quantities.

4.2.2. Walls and Curtain Walls. Each wall shall be depicted to the exact height, length, width and ratings (thermal, acoustic, fire) to properly reflect wall types. The Model shall include all walls, both interior and exterior, and the necessary intelligence to produce accurate plans, sections and elevations depicting these design elements.

4.2.3. Doors, Windows and Louvers. Doors, windows and louvers shall be depicted to represent their actual size, type and location. Doors and windows shall be modeled with the necessary intelligence to produce accurate window and door schedules.

4.2.4. Roof. The Model shall include the roof configuration, drainage system, penetrations, specialties, and the necessary intelligence to produce accurate plans, building sections and generic wall sections where roof design elements are depicted.

4.2.5. Floors. The floor slab shall be developed in the structural Model and then referenced by the architectural Model for each floor of the Project building.

4.2.6. Ceilings. All heights and other dimensions of ceilings, including soffits, ceiling materials, or other special conditions shall be depicted in the Model with the necessary intelligence to produce accurate plans, building sections and generic wall sections where ceiling design elements are depicted.

4.2.7. Vertical Circulation. All continuous vertical components (i.e., non-structural shafts, architectural stairs, handrails and guardrails) shall be accurately depicted and shall include the necessary intelligence to produce accurate plans, elevations and sections in which such design elements are referenced.

4.2.8. Architectural Specialties and Woodwork. All architectural specialties (i.e., toilet room accessories, toilet partitions, grab bars, lockers, and display cases) and woodwork (i.e., cabinetry and counters) shall be accurately depicted with the necessary intelligence to produce accurate plans, elevations and sections in which such design elements are referenced.

4.2.9. Signage. The Model shall include all signage and the necessary intelligence to produce accurate plans and schedules.

4.2.10. Schedules. Provide door, window, hardware sets using BHMA designations, flooring, wall finish, and signage schedules from the Model, indicating the type, materials and finishes used in the design.

4.3. Furniture. The furniture systems Model may vary in level of detail for individual elements within a Model, but at a minimum must include all features that would be included on a quarter inch (1/4”=1’0”) scaled drawing, and have necessary intelligence to produce accurate plans. Representation of furniture elements is to be 2D. Contractor may provide a minimal number of 3D representations as examples. Examples of furniture include, but are not limited to, desks, furniture systems, seating, tables, and office storage.

4.3.1. Furniture Coordination. Furniture that makes use of electrical, data or other features shall include the necessary intelligence to produce coordinated documents and data.

4.4. Equipment. The Model may vary in level of detail for individual elements within a Model. Equipment shall be depicted to meet layout requirements with the necessary intelligence to produce accurate plans and minimum schedules depicting their configuration. Examples of equipment include but are not limited to copiers, printers, refrigerators, ice machines and microwaves.

4.4.1. Schedules. Provide furniture and equipment schedules from the model indicating the materials, finishes, mechanical, and electrical requirements.

4.5. Structural. The structural systems Model may vary in level of detail for individual elements, but at a minimum must include all features that would be included on a quarter inch (1/4”=1’0”) scaled drawing. Additional minimum Model requirements include:

4.5.1. Foundations. All necessary foundation and/or footing elements, with necessary intelligence to produce accurate plans and elevations.

4.5.2. Floor Slabs. Structural floor slabs shall be depicted, including all necessary recesses, curbs, pads, closure pours, and major penetrations accurately depicted.

4.5.3. Structural Steel. All steel columns, primary and secondary framing members, and steel bracing for the roof and floor systems (including decks), including all necessary intelligence to produce accurate structural steel framing plans and related building/wall sections.

4.5.4. Cast-in-Place Concrete. All walls, columns, and beams, including necessary intelligence to produce accurate plans and building/wall sections depicting cast-in-place concrete elements.

4.5.5. Expansion/Contraction Joints. Joints shall be accurately depicted.

4.5.6. Stairs. The structural Model shall include all necessary openings and framing members for stair systems, including necessary intelligence to produce accurate plans and building/wall sections depicting stair design elements.

4.5.7. Shafts and Pits. The structural Model shall include all necessary shafts, pits, and openings, including necessary intelligence to produce accurate plans and building/wall sections depicting these design elements.

4.6. Mechanical. The mechanical systems Model may vary in level of detail for individual elements, but at a minimum must include all features that would be included on a quarter inch (1/4”=1’0”) scaled drawing. Small diameter (less than 1-1/2” NPS) field-routed piping is not required in the model. Additional minimum Model requirements include:

4.6.1. HVAC. All necessary heating, ventilating, air-conditioning and specialty equipment, including air distribution ducts for supply, return, and ventilation and exhaust ducts, including control system, registers, diffusers, grills and hydronic baseboards with necessary intelligence to produce accurate plans, elevations, building/wall sections and schedules.

4.6.1.1. Mechanical Piping. All necessary piping and fixture layouts, and related equipment, including necessary intelligence to produce accurate plans, elevations, building/wall sections, and schedules.

4.6.2. Plumbing. All necessary plumbing piping and fixture layouts, floor and area drains, and related equipment, including necessary intelligence to produce accurate plans, elevations, building/wall sections, riser diagrams, and schedules.

4.6.3. Equipment Clearances. All HVAC and Plumbing equipment clearances shall be modeled for use in interference management and maintenance access requirements.

4.6.4. Elevator Equipment. The Model shall include the necessary equipment and control system, including necessary intelligence to produce accurate plans, sections and elevations depicting these design elements.

4.7. Electrical/Telecommunications. The electrical systems Model may vary in level of detail for individual elements, but at a minimum must include all features that would be included on a quarter inch (1/4”=1’0”) scaled drawing. Small diameter (less than 1-1/2”Ø) field-routed conduit is not required in the model. Additional minimum Model requirements include:

4.7.1. Interior Electrical Power and Lighting. All necessary interior electrical components (i.e., lighting, receptacles, special and general purpose power receptacles, lighting fixtures, panelboards, cable trays and control systems), including necessary intelligence to produce accurate plans, details and schedules. Lighting and power built into furniture/equipment shall be modeled.

4.7.2. Special Electrical Systems. All necessary special electrical components (i.e., security, Mass Notification, Public Address, nurse call and other special occupancies, and control systems), including necessary intelligence to produce accurate plans, details and schedules.

4.7.3. Grounding Systems. All necessary grounding components (i.e., lightning protection systems, static grounding systems, communications grounding systems, bonding), including necessary intelligence to produce accurate plans, details and schedules.

4.7.4. Communications. All existing and new communications service controls and connections, both above ground and underground with necessary intelligence to produce accurate plans, details and schedules. Cable tray routing shall be modeled without detail of cable contents.

4.7.5. Exterior Building Lighting. All necessary exterior lighting with necessary intelligence to produce accurate plans, elevations and schedules. The exterior building lighting Model shall include all necessary lighting, relevant existing and proposed support utility lines and equipment required with necessary intelligence to produce accurate plans, details and schedules.

4.7.6. Equipment Clearances. The model shall incorporate and define all electrical and communications working spaces, clearances, and required access

4.8. Fire Protection. The fire protection system Model may vary in level of detail for individual elements, but at a minimum must include all features that would be included on a quarter inch (1/4”=1’0”) scaled drawing. Additional minimum Model requirements include:

4.8.1. Fire Protection System. All relevant fire protection components (i.e., branch piping, sprinkler heads, fittings, drains, pumps, tanks, sensors, control panels) with necessary intelligence to produce accurate plans, elevations, building/wall sections, riser diagrams, and schedules. All fire protection piping shall be modeled.

4.8.2. Fire Alarms. Fire alarm/mass notification devices and detection system shall be indicated with necessary intelligence to produce accurate plans depicting them.

4.9. Civil. The civil Model may vary in level of detail for individual elements, but at a minimum must include all features that would be included on a one inch (1”=100’) scaled drawing. Additional minimum Model requirements include:

4.9.1. Terrain (DTM). All relevant site conditions and proposed grading, including necessary intelligence to produce accurate Project site topographical plans and cross sections.

4.9.2. Drainage. All existing and new drainage piping, including upgrades thereto, including necessary intelligence to produce accurate plans and profiles for the Project site.

4.9.3. Storm Water and Sanitary Sewers. All existing and new sewer structures and piping, including upgrades thereto, on the Project site with necessary connections to mains or other distribution points as appropriate, including necessary intelligence to produce accurate plans and profiles for the Project site.

4.9.4. Utilities. All necessary new utilities connections from the Project building(s) to the existing or newly-created utilities, and all existing above ground and underground utility conduits, including necessary intelligence to produce accurate plans and site-sections.

4.9.5. Roads and Parking. All necessary roadways and parking lots or parking structures, including necessary intelligence to produce accurate plans, profiles and cross-sections.

5.0 Section 5 - Ownership and Rights in Data

5.1. Ownership. The Government has ownership of and rights at the date of Closeout Submittal to all CAD files, BIM Model, and Facility Data developed for the Project in accordance with FAR Part 27, clauses incorporated in Section 00 72 00, Contract Clauses and Special Contract Requirement 1.14 GOVERNMENT RE-USE OF DESIGN (Section 00 73 00). The Government may make use of this data following any deliverable.

6.0 Section 6 – Contractor Electives

6.1. Applicable Criteria. If the Contractor elected to include one or more of the following features as an elective in its accepted contract proposal for additional credit during the source selection, as described in the proposal submission requirements and evaluation criteria, the following criteria are requirements, as applicable to those elective feature(s).

6.2. COBIE Compliance. The Model and Facility Data for the Project shall fulfill Construction Operations Building Information Exchange (COBIE) requirements as defined by the Whole Building Design Guide organization, including all requirements for the indexing and submission of Portable Document Format (PDF) and other appropriate file formats that would otherwise be printed and submitted in compliance with Project operations and maintenance handover requirements.

6.3. Project Scheduling using the Model. In the BIM Execution Plan and during the Preliminary BIM Execution Plan Review, provide an overview of the use of BIM in the development and support of the project construction schedule.

6.3.1. Submittal Requirements. During the Submittal stages, the Contractor shall deliver the construction schedule with information derived from the Model.

6.3.1.1. Construction Submittals – Over-The-Shoulder Progress Reviews. Periodic quality control meetings or construction progress review meetings shall include quality control reviews on the implementation and use of the Model for project scheduling.

6.4. Cost Estimating. In the BIM Execution Plan and during the Preliminary BIM Execution Plan Review, provide an overview of the use of BIM in the development and support of cost estimating requirements, or other applications such as cost analysis and estimate validation.

6.4.1. Submittal Requirements. During the Submittal stages, the Contractor shall deliver cost estimating information derived from the Model.

6.4.2. Project completion. At project completion, the Contractor shall provide an MII (Micro Computer Aided Cost Estimating System Generation II) Cost Estimate which follows the USACE Cost Engineering Military Work Breakdown System (WBS), a modified Uniformat, to at least the sub-systems level and uses quantity information supplied directly from BIM output to the maximum extent possible, though other "Gap" quantity information will be included as necessary for a complete and accurate cost estimate.

6.4.2.1. Sub system level extracted quantities from the BIM for use within the estimate shall be provided according to how detailed line items or tasks should be installed/built so that accurate costs can be developed and/or reflected. Therefore, when developing a BIM, the designer shall be cognizant of what tasks need to be separated appropriately at the beginning stages of model development, such as tasks done on the first floor versus the same task on higher floors that will be more labor intensive and therefore need to have a separate quantity and be priced differently. Tasks and their extracted quantities from the BIM shall be broken done by their location (proximity in the structure) as well as the complexity of its installation.

6.4.2.2. At all design stages it shall be understood that BIM output as described in this document will not generate all quantities that are necessary in order to develop a complete and accurate cost estimate of the project based on the design. An example of this would be plumbing that is less than 1.5" diameter and therefore not expected to be modeled due to granularity; this information is commonly referred to as The Gap. Quantities from The Gap and their associated costs shall be included in the final project actual cost estimates as well.

6.5. Other Analyses and Reports. Structural, energy and efficiency, EPACT 2005 & EISA 2007, lighting design, daylighting, electrical power, psychrometric processing, shading, programming, LEED, fire protection, code compliance, Life Cycle Cost, acoustic, plumbing.

7.0 Section 7 – BIM Project Execution Plan Template

7.1. Contractors will utilize the latest version of the USACE BIM PROJECT EXECUTION PLAN (USACE PxP) Template to develop an acceptable Plan. The template can be downloaded from the CAD/BIM Technology Center website.

ATTACHMENT G
DESIGN SUBMITTAL DIRECTORY AND SUBDIRECTORY FILE ARRANGEMENT

Organize electronic design submittal files in a subdirectory/file structure in accordance with the following table. The Contractor may suggest a slightly different structure, subject to the discretion of the government.

Design Submittal Directory and Subdirectory File Arrangement.

Directory	Sub-Directory	Sub-Directory or Files	Files
Submittal/Package Name	Narratives	PDF file or files with updated design narrative for each applicable design discipline	
	Drawings	PDF (subdirectory)	Single PDF file with all applicable drawing sheets - bookmarked by sheet number and name
		BIM (subdirectory) See Attachment F.	BIM project folder (with files) per the USACE Workspace. Include an Excel drawing index file with each drawing sheet listed by sheet #, name and corresponding dgn file name (Final Design & Design Complete only)
	Design Analysis & Calculations	Individual PDF files containing design analysis and calculations for each discipline applicable to the submittal	
		PDF file with Fire Protection and Life Safety Code Review checklist	
	LEED	PDF file with updated Leed Check List	
		PDF file or files with LEED Templates for each point with applicable documentation included in each file.	
		LEED SUBMITTALS	
	Energy Analysis	PDF with baseline energy consumption analysis	
		PDF with actual building energy consumption analysis	
	Specifications	Single PDF file with table of contents and all applicable specifications sections.	
		Submittal Register (Final Design & Design Complete submittal only)	
	Design Quality Control	PDF file or files with DQC checklist(s) and/or statements	
	Building Rendering(s)	PDF file of rendering for each building type included in contract (Final Design & Design Complete).	

SECTION 01 45 01.10
QUALITY CONTROL SYSTEM (QCS)

1.0 GENERAL

1.1. CORRESPONDENCE AND ELECTRONIC COMMUNICATIONS

1.2. QCS SOFTWARE

1.3. SYSTEM REQUIREMENTS

1.4. RELATED INFORMATION

1.5. CONTRACT DATABASE

1.6. DATABASE MAINTENANCE

1.7. IMPLEMENTATION

1.8. DATA SUBMISSION VIA COMPUTER DISKETTE OR CD-ROM

1.9. MONTHLY COORDINATION MEETING

1.10. NOTIFICATION OF NONCOMPLIANCE

1.0 GENERAL

The Government will use the Resident Management System for Windows (RMS) to assist in its monitoring and administration of this contract. The Contractor shall use the Government-furnished Construction Contractor Module of RMS, referred to as QCS, to record, maintain, and submit various information throughout the contract period. The Contractor module, user manuals, updates, and training information can be downloaded from the RMS web site. This joint Government-Contractor use of RMS and QCS will facilitate electronic exchange of information and overall management of the contract. QCS provides the means for the Contractor to input, track, and electronically share information with the Government in the following areas:

- Administration
- Finances
- Quality Control
- Submittal Monitoring
- Scheduling
- Import/Export of Data
- Request for Information
- Accident Reporting
- Safety Exposure Manhours

1.1. CORRESPONDENCE AND ELECTRONIC COMMUNICATIONS

For ease and speed of communications, both Government and Contractor will exchange correspondence and other documents in electronic format. Correspondence, pay requests and other documents comprising the official contract record shall also be provided in paper format, with signatures and dates where necessary. Paper documents will govern, in the event of discrepancy with the electronic version.

1.2. OTHER FACTORS

Particular attention is directed to Contract Clause, "Schedules for Construction Contracts", Contract Clause, "Payments", Section 01 32 01.00 10, PROJECT SCHEDULE, Section 01 33 00, SUBMITTAL PROCEDURES, and Section 01 45 04.00 10, CONTRACTOR QUALITY CONTROL, which have a direct relationship to the reporting to be accomplished through QCS. Also, there is no separate payment for establishing and maintaining the QCS database; all costs associated therewith shall be included in the contract pricing for the work.

1.3. QCS SOFTWARE

QCS is a Windows-based program that can be run on a stand-alone personal computer or on a network. The Government will make available the QCS software to the Contractor after award of the construction contract. Prior to the Pre-Construction Conference, the Contractor shall be responsible to download, install and use the latest version of the QCS software from the Government's RMS Internet Website. Upon specific justification and request by the Contractor, the Government can provide QCS on CD-ROM. Any program updates of QCS will be made available to the Contractor via the Government RMS Website as they become available.

1.4. SYSTEM REQUIREMENTS

The following listed hardware and software is the minimum system configuration that the Contractor shall have to run QCS:

(a) Hardware

- IBM-compatible PC with 1000 MHz Pentium or higher processor
- 256 MB RAM for workstation / 512+ MB RAM for server
- 1 GB hard drive disk space for sole use by the QCS system
- Compact disk (CD) Reader, 8x speed or higher
- SVGA or higher resolution monitor (1024 x 768, 256 colors)
- Mouse or other pointing devise
- Windows compatible printer (Laser printer must have 4+ MB of RAM)
- Connection to the Internet, minimum 56K BPS

(b) Software

- MS Windows 2000 or higher
- MS Word 2000 or newer
- Latest version of : Netscape Navigator, Microsoft Internet Explorer, or other browser that supports HTML 4.0 or higher
- Electronic mail (E-mail), MAPI compatible
- Virus protection software that is regularly upgraded with all issued manufacturer's updates

1.5. RELATED INFORMATION

1.5.1. QCS USER GUIDE

After contract award, the Contractor shall download instructions for the installation and use of QCS from the Government RMS Internet Website. In case of justifiable difficulties, the Government will provide the Contractor with a CD-ROM containing these instructions.

1.5.2. CONTRACTOR QUALITY CONTROL (CQC) TRAINING

The use of QCS will be discussed with the Contractor's QC System Manager during the mandatory CQC Training class.

1.6. CONTRACT DATABASE

Prior to the pre-construction conference, the Government will provide the Contractor with basic contract award data to use for QCS. The Government will provide data updates to the Contractor as needed, generally by using the government's SFTP repository built into QCS import/export function. These updates will generally consist of submittal reviews, correspondence status, QA comments, and other administrative and QA data.

1.7. DATABASE MAINTENANCE

The Contractor shall establish, maintain, and update data for the contract in the QCS database throughout the duration of the contract. The Contractor shall establish and maintain the QCS database at the Contractor's site office. Data updates to the Government, e.g., daily reports, submittals, RFI's, schedule updates, payment requests, etc. shall be submitted using the government's SFTP repository built into QCS export function. If permitted by the Contracting Officer, email or CD-ROM may be used instead (see Paragraph DATA SUBMISSION VIA CD-ROM). The QCS database typically shall include current data on the following items:

1.7.1. ADMINISTRATION

1.7.1.1. Contractor Information

The database shall contain the Contractor's name, address, telephone numbers, management staff, and other required items. Within 14 calendar days of receipt of QCS software from the Government, the Contractor shall deliver Contractor administrative data in electronic format.

1.7.1.2. Subcontractor Information

The database shall contain the name, trade, address, phone numbers, and other required information for all subcontractors. A subcontractor must be listed separately for each trade to be performed. Each subcontractor/trade shall be assigned a unique Responsibility Code, provided in QCS. Within 14 calendar days of receipt of QCS software from the Government, the Contractor shall deliver subcontractor administrative data in electronic format.

1.7.1.3. Correspondence

All Contractor correspondence to the Government shall be identified with a serial number. Correspondence initiated by the Contractor's site office shall be prefixed with "S". Letters initiated by the Contractor's home (main)

office shall be prefixed with "H". Letters shall be numbered starting from 0001. (e.g., H-0001 or S-0001). The Government's letters to the Contractor will be prefixed with "C".

All Requests For Information (RFI) shall be exchanged using the Built-in RFI generator and tracker in QCS.

1.7.1.4. Equipment

The Contractor's QCS database shall contain a current list of equipment planned for use or being used on the jobsite, including the most recent and planned equipment inspection dates.

1.7.1.5. Management Reporting

QCS includes a number of reports that Contractor management can use to track the status of the project. The value of these reports is reflective of the quality of the data input, and is maintained in the various sections of QCS. Among these reports are: Progress Payment Request worksheet, QA/QC comments, Submittal Register Status, Three-Phase Inspection checklists.

1.7.2. FINANCES

1.7.2.1. Pay Activity Data

The QCS database shall include a list of pay activities that the Contractor shall develop in conjunction with the design and construction schedule. The sum of all pay activities shall be equal to the total contract amount, including modifications. Pay activities shall be grouped by Contract Line Item Number (CLIN), and the sum of the activities shall equal the amount of each CLIN. The total of all CLINs equals the Contract Amount.

1.7.2.2. Payment Requests

All progress payment requests shall be prepared using QCS. The Contractor shall complete the payment request worksheet prompt payment certification, and payment invoice in QCS. The work completed under the contract, measured as percent or as specific quantities, shall be updated at least monthly. After the update, the Contractor shall generate a payment request report using QCS. The Contractor shall submit the payment request, prompt payment certification, and payment invoice with supporting data by using the government's SFTP repository built into QCS export function. If permitted by the Contracting Officer, E-mail or a CD-ROM may be used. A signed paper copy of the approved payment request is also required, which shall govern in the event of discrepancy with the electronic version.

1.7.3. Quality Control (QC)

QCS provides a means to track implementation of the 3-phase QC Control System, prepare daily reports, identify and track deficiencies, document progress of work, and support other contractor QC requirements. The Contractor shall maintain this data on a daily basis. Entered data will automatically output to the QCS generated daily report. The Contractor shall provide the Government a Contractor Quality Control (CQC) Plan within the time required in Section 01 45 04.00 10, CONTRACTOR QUALITY CONTROL. Within seven calendar days of Government acceptance, the Contractor shall submit a QCS update reflecting the information contained in the accepted CQC Plan: schedule, pay activities, features of work, submittal register, QC requirements, and equipment list.

1.7.3.1. Daily Contractor Quality Control (CQC) Reports

QCS includes the means to produce the Daily CQC Report. The Contractor may use other formats to record basic QC data. However, the Daily CQC Report generated by QCS shall be the Contractor's official report. Data from any supplemental reports by the Contractor shall be summarized and consolidated onto the QCS-generated Daily CQC Report. Daily CQC Reports shall be submitted as required by Section 01 45 04.00 10, CONTRACTOR QUALITY CONTROL. Reports shall be submitted electronically to the Government within 24 hours after the date covered by the report. The Contractor shall also provide the Government a signed, printed copy of the daily CQC report.

1.7.3.2. Deficiency Tracking

The Contractor shall use QCS to track deficiencies. Deficiencies identified by the Contractor will be numerically tracked using QC punch list items. The Contractor shall maintain a current log of its QC punch list items in the QCS database. The Government will log the deficiencies it has identified using its QA punch list items. The Government's QA punch list items will be included in its export file to the Contractor. The Contractor shall regularly update the correction status of both QC and QA punch list items.

1.7.3.3. QC Requirements

The Contractor shall develop and maintain a complete list of QC testing and required structural and life safety special inspections required by the International Code Council (ICC), transferred and installed property, and user training requirements in QCS. The Contractor shall update all data on these QC requirements as work progresses, and shall promptly provide this information to the Government via QCS.

1.7.3.4. Three-Phase Control Meetings

The Contractor shall maintain scheduled and actual dates and times of preparatory and initial control meetings in QCS.

1.7.3.5. Labor and Equipment Hours

The Contractor shall log labor and equipment exposure hours on a daily basis. This data will be rolled up into a monthly exposure report.

1.7.3.6. Accident/Safety Tracking Reporting

The Government will issue safety comments, directions, or guidance whenever safety deficiencies are observed. The Government's safety comments will be included in its export file to the Contractor. The Contractor shall regularly update the correction status of the safety comments. In addition, the Contractor shall utilize QCS to advise the Government of any accidents occurring on the jobsite. This supplemental entry is not to be considered as a substitute for completion of mandatory notification and reports, e.g., ENG Form 3394 and OSHA Form 300.

1.7.3.7. Features of Work

The Contractor shall include a complete list of the features of work in the QCS database. A feature of work may be associated with multiple pay activities. However, each pay activity (see subparagraph "Pay Activity Data" of paragraph "Finances") will only be linked to a single feature of work.

1.7.3.8. Hazard Analysis

The Contractor shall use QCS to develop a hazard analysis for each feature of work included in its CQC Plan. The hazard analysis shall address any hazards, or potential hazards, that may be associated with the work

1.7.4. Submittal Management

The Government will provide the submittal register form, ENG Form 4288, SUBMITTAL REGISTER, in electronic format. The Contractor and Designer of Record (DOR) shall develop and maintain a complete list of all submittals, including completion of all data columns and shall manage all submittals. Dates on which submittals are received and returned by the Government will be included in its export file to the Contractor. The Contractor shall use QCS to track and transmit all submittals. ENG Form 4025, submittal transmittal form, and the submittal register update, ENG Form 4288, shall be produced using QCS. QCS and RMS will be used to update, store and exchange submittal registers and transmittals, but will not be used for storage of actual submittals.

1.7.5. Schedule

The Contractor shall develop a design and construction schedule consisting of pay activities, in accordance with Section 01 32 01.00 10, PROJECT SCHEDULE, as applicable. This schedule shall be input and maintained in the QCS database either manually or by using the Standard Data Exchange Format (SDEF) (see Section 01 32 01.00 10 PROJECT SCHEDULE). The updated schedule data shall be included with each pay request submitted by the Contractor.

1.7.5.1. Import/Export of Data

QCS includes the ability to export Contractor data to the Government and to import submittal register and other Government-provided data from RMS, and schedule data using SDEF.

1.8. IMPLEMENTATION

Contractor use of QCS as described in the preceding paragraphs is mandatory. The Contractor shall ensure that sufficient resources are available to maintain its QCS database, and to provide the Government with regular database updates. QCS shall be an integral part of the Contractor's management of quality control.

1.9. DATA SUBMISSION VIA COMPUTER DISKETTE OR CD-ROM

The Government-preferred method for Contractor's submission of QCS data is by using the government's SFTP repository built into QCS export function.. Other data should be submitted using E-mail with file attachment(s). For locations where this is not feasible, the Contracting Officer may permit use of CD-ROM for data transfer. Data on CDs shall be exported using the QCS built-in export function. If used, CD-ROMs will be submitted in accordance with the following:

1.9.1. File Medium

The Contractor shall submit required data on CD-ROMs. They shall conform to industry standards used in the United States. All data shall be provided in English.

1.9.2. Disk Or Cd-Rom Labels

The Contractor shall affix a permanent exterior label to each diskette and CD-ROM submitted. The label shall indicate in English, the QCS file name, full contract number, contract name, project location, data date, name and telephone number of person responsible for the data.

1.9.3. File Names

The files will be automatically named by the QCS software. The naming convention established by the QCS software shall not be altered in any way by the Contractor.

1.10. MONTHLY COORDINATION MEETING

The Contractor shall update the QCS database each workday. At least monthly, the Contractor shall generate and submit an export file to the Government with schedule update and progress payment request. As required in Contract Clause "Payments", at least one week prior to submittal, the Contractor shall meet with the Government representative to review the planned progress payment data submission for errors and omissions.

The Contractor shall make all required corrections prior to Government acceptance of the export file and progress payment request. Payment requests accompanied by incomplete or incorrect data submittals will be returned. The Government will not process progress payments until an acceptable QCS export file is received.

1.11. NOTIFICATION OF NONCOMPLIANCE

The Contracting Officer will notify the Contractor of any detected noncompliance with the requirements of this specification. The Contractor shall take immediate corrective action after receipt of such notice. Such notice, when delivered to the Contractor at the work site, shall be deemed sufficient for the purpose of notification.

End of Section 01 45 01.10

SECTION 01 45 04.00 10
CONTRACTOR QUALITY CONTROL

1.0 GENERAL

1.1. REFERENCES

1.2. PAYMENT

2.0 PRODUCTS (NOT APPLICABLE)

3.0 EXECUTION

3.1. GENERAL REQUIREMENTS

3.2. QUALITY CONTROL PLAN

3.3. COORDINATION MEETING

3.4. QUALITY CONTROL ORGANIZATION

3.5. SUBMITTALS AND DELIVERABLES

3.6. CONTROL

3.7. TESTS

3.8. COMPLETION INSPECTION

3.9. DOCUMENTATION

3.10. NOTIFICATION OF NONCOMPLIANCE

1.0 GENERAL

1.1. REFERENCES

The publications listed below form a part of this specification to the extent referenced. The publications are referred to within the text by the basic designation only. Refer to the latest edition, as of the date of the contract solicitation.

- ASTM INTERNATIONAL (ASTM)
- ASTM D 3740 Minimum Requirements for Agencies

  Engaged in the Testing and/or Inspection
  of Soil and Rock as Used in Engineering
  Design and Construction
- ASTM E 329 Agencies Engaged in the Testing

  and/or Inspection of Materials Used in
  Construction
- U.S. ARMY CORPS OF ENGINEERS (USACE)

  ER 1110-1-12 Quality Management

1.2. PAYMENT

There will be no separate payment for providing and maintaining an effective Quality Control program. Include all costs associated therewith in the applicable unit prices or lump-sum prices contained in the Contract Line Item Schedule.

2.0 PRODUCTS (Not Applicable)

3.0 EXECUTION

3.1. GENERAL REQUIREMENTS

The Contractor is responsible for quality control and shall establish and maintain an effective quality control system in compliance with the Contract Clause titled "Inspection of Construction." The quality control system shall consist of plans, procedures, and organization necessary to produce an end product, which complies with the contract requirements. The system shall cover all design and construction operations, both onsite and offsite, and shall be keyed to the proposed design and construction sequence. The site project superintendent is responsible for the quality of work on the job and is subject to removal by the Contracting Officer for non-compliance with the quality requirements specified in the contract. The site project superintendent in this context shall be the highest level manager responsible for the overall construction activities at the site, including quality and production. The site project superintendent shall maintain a physical presence at the site at all times, except as otherwise acceptable to the Contracting Officer, and shall be responsible for all construction and construction related activities at the site.

3.2. QUALITY CONTROL PLAN

Furnish for Government review, not later than 30 days after receipt of notice to proceed, the Contractor Quality Control (CQC) Plan proposed to implement the requirements of the Contract Clause titled "Inspection of Construction." The plan shall identify personnel, procedures, control, instructions, tests, records, and forms to be used. The Government will consider an interim plan for the first 30 days of operation. Design and construction may begin only after acceptance of the CQC Plan or acceptance of an interim plan applicable to the particular feature of work to be started. The Government will not permit work outside of the features of work included in an accepted interim plan to begin until acceptance of a CQC Plan or another interim plan containing the additional features of work to be started. Where the applicable Code issued by the International Code Council calls for an inspection by the Building Official, the Contractor shall include the inspections in the Quality Control Plan and shall perform the inspections. The Designer of Record shall develop a program for any special inspections required by the applicable International Codes and the Contractor shall perform these inspections, using qualified inspectors. Include the special inspection plan in the QC Plan.

3.2.1. Content of the CQC Plan

The CQC Plan shall include, as a minimum, the following to cover all design and construction operations, both onsite and offsite, including work by subcontractors, fabricators, suppliers, and purchasing agents subcontractors, designers of record, consultants, architect/engineers (AE), fabricators, suppliers, and purchasing agents:

3.2.1.1. A description of the quality control organization. Include a chart showing lines of authority and an acknowledgment that the CQC staff shall implement the three phase control system for all aspects of the work specified. A CQC System Manager shall report to the project superintendent or someone higher in the contractor's organization.

3.2.1.2. The name, qualifications (in resume format), duties, responsibilities, and authorities of each person assigned a CQC function. Also include those responsible for performing and documenting the inspections required by the International Codes and the special inspection program developed by the designer of record.

3.2.1.3. A copy of the letter to the CQC System Manager, signed by an authorized official of the firm, which describes the responsibilities and delegates sufficient authorities to adequately perform the functions of the CQC System Manager, including authority to stop work which is not in compliance with the contract. The CQC System Manager shall issue letters of direction to all other various quality control representatives outlining duties, authorities, and responsibilities. Furnish copies of these letters.

3.2.1.4. Procedures for scheduling, reviewing, certifying, and managing submittals, including those of subcontractors, offsite fabricators, suppliers, and purchasing agents subcontractors, designers of record, consultants, architect engineers (AE), offsite fabricators, suppliers, and purchasing agents. These procedures shall be in accordance with Section 01 33 00 SUBMITTAL PROCEDURES.

3.2.1.5. Control, verification, and acceptance testing procedures for each specific test to include the test name, specification paragraph requiring test, feature of work to be tested, test frequency, and person responsible for each test. Use only Government approved Laboratory facilities.

3.2.1.6. Procedures for tracking preparatory, initial, and follow-up control phases and control, verification, and acceptance tests including documentation.

3.2.1.7. Procedures for tracking design and construction deficiencies from identification through acceptable corrective action. These procedures shall establish verification that identified deficiencies have been corrected.

3.2.1.8. Reporting procedures, including proposed reporting formats.

3.2.1.9. A list of the definable features of work. A definable feature of work is a task, which is separate and distinct from other tasks, has separate control requirements, and may be identified by different trades or disciplines, or it may be work by the same trade in a different environment. Although each section of the specifications may generally be considered as a definable feature of work, there are frequently more than one definable feature under a particular section. This list will be agreed upon during the coordination meeting.

3.2.1.10. A list of all inspections required by the International Codes and the special inspection program required by the code and this contract.

3.2.2. Additional Requirements for Design Quality Control (DQC) Plan

The following additional requirements apply to the Design Quality Control (DQC) plan:

3.2.2.1. The Contractor's QCP Plan shall provide and maintain a Design Quality Control (DQC) Plan as an effective quality control program which will assure that all services required by this design-build contract are performed and provided in a manner that meets professional architectural and engineering quality standards. As a minimum, competent, independent reviewers identified in the DQC Plan shall review all documents. Use personnel who were not involved in the design effort to produce the design to perform the independent technical review (ITR). The ITR is intended as a quality control check of the design. Include, at least, but not necessarily limited to, a review of the contract requirements (the accepted contract or task order proposal and amended RFP), the basis of design, design calculations, the design configuration management documentation and check the design documents for

errors, omissions, and for coordination and design integration. The ITR team is not required to examine, compare or comment concerning alternate design solutions but should concentrate on ensuring that the design meets the contract requirements. Correct errors and deficiencies in the design documents prior to submitting them to the Government.

3.2.2.2. Include in the DQC Plan the discipline-specific checklists to be used during the design and quality control of each submittal. Submit these completed checklists at each design phase as part of the project documentation.

3.2.2.3. A Design Quality Control Manager, who has the responsibility of being cognizant of and assuring that all documents on the project have been coordinated, shall implement the DQC Plan This individual shall be a person who has verifiable engineering or architectural design experience and is a registered professional engineer or architect. Notify the Government, in writing, of the name of the individual, and the name of an alternate person assigned to the position.

3.2.3. Acceptance of Plan

Government acceptance of the Contractor's plan is required prior to the start of design and construction. Acceptance is conditional and will be predicated on satisfactory performance during the design and construction. The Government reserves the right to require the Contractor to make changes in his CQC Plan and operations including removal of personnel, as necessary, to obtain the quality specified.

3.2.4. Notification of Changes

After acceptance of the CQC Plan, notify the Government in writing of any proposed change. Proposed changes are subject to Government acceptance.

3.3. COORDINATION MEETING

After the Postaward Conference, before start of design or construction, and prior to acceptance by the Government of the CQC Plan, the Contractor and the Government shall meet and discuss the Contractor's quality control system. Submit the CQC Plan for review a minimum of 7 calendar days prior to the Coordination Meeting. During the meeting, a mutual understanding of the system details shall be developed, including the forms for recording the CQC operations, design activities, control activities, testing, administration of the system for both onsite and offsite work, and the interrelationship of Contractor's Management and control with the Government's Quality Assurance. The Government will prepare minutes of the meeting for signature by both parties. . The minutes shall become a part of the contract file. There may be occasions when either party will call for subsequent conferences to reconfirm mutual understandings and/or address deficiencies in the CQC system or procedures which may require corrective action by the Contractor.

3.4. QUALITY CONTROL ORGANIZATION

3.4.1. Personnel Requirements

The requirements for the CQC organization are a CQC System Manager, a Design Quality Manager, and sufficient number of additional qualified personnel to ensure contract compliance. The CQC organization shall also include personnel identified in the technical provisions as requiring specialized skills to assure the required work is being performed properly. The Contractor's CQC staff shall maintain a presence at the site at all times during progress of the work and have complete authority and responsibility to take any action necessary to ensure contract compliance. The CQC staff shall be subject to acceptance by the Contracting Officer. Provide adequate office space, filing systems and other resources as necessary to maintain an effective and fully functional CQC organization. Promptly furnish complete records of all letters, material submittals, shop drawing submittals, schedules and all other project documentation to the CQC organization. The CQC organization shall be responsible to maintain these documents and records at the site at all times, except as otherwise acceptable to the Contracting Officer.

3.4.2. CQC System Manager

Identify as CQC System Manager an individual within the onsite work organization who shall be responsible for overall management of CQC and have the authority to act in all CQC matters for the Contractor. The CQC System

Manager shall be a graduate engineer, graduate architect, or a BA/BS graduate of an ACCE accredited construction management college program. The CQC system Manager may alternately be an engineering technician with at least 2 years of college and an ICC certification as a Commercial Building Inspector (Residential Building Inspector certification will be required for Military Family Housing projects). In addition, the CQC system manager shall have a minimum of 5 years construction experience on construction similar to this contract. The CQC System Manager shall be on the site at all times during construction and shall be employed by the prime Contractor. Assign the CQC System Manager no other duties (except may also serve as Safety and Health Officer, if qualified and if allowed by Section 00 73 00). Identify an alternate for the CQC System Manager in the plan to serve in the event of the System Manager's absence. The requirements for the alternate shall be the same as for the designated CQC System Manager but the alternate may have other duties in addition to serving in a temporary capacity as the acting QC manager.

3.4.3. CQC Personnel

3.4.3.1. In addition to CQC personnel specified elsewhere in the contract provide specialized CQC personnel to assist the CQC System Manager in accordance with paragraph titled Area Qualifications.

3.4.3.2. These individuals may be employees of the prime or subcontractor; be responsible to the CQC System Manager; **are not intended to be full time, but must be physically present at the construction site during work on their areas of responsibility**; have the necessary education and/or experience in accordance with the experience matrix listed herein. These individuals may perform other duties but must be allowed sufficient time to perform their assigned quality control duties as described in the Quality Control Plan. **One person may cover more than one area, provided that they are qualified to perform QC activities for the designated areas below and provided that they have adequate time to perform their duties:**

3.4.4. Experience Matrix

3.4.4.1. Area Qualifications

3.4.4.1.1. Civil - Graduate Civil Engineer or (BA/BS) graduate in construction management with 4 years experience in the type of work being performed on this project or engineering technician with 5 yrs related experience.

3.4.4.1.2. Mechanical - Graduate Mechanical Engineer or (BA/BS) graduate in construction management with 4 yrs related experience or engineering technician with an ICC certification as a Commercial Mechanical Inspector with 5 yrs related experience.

3.4.4.1.3. Electrical - Graduate Electrical Engineer or (BA/BS) graduate in construction management with 4 yrs related experience or engineering technician with an ICC certification as a Commercial Electrical Inspector with 5 yrs related experience.

3.4.4.1.4. Structural - Graduate Structural Engineer or (BA/BS) graduate in construction management with 4 yrs related experience or person with an ICC certification as a Reinforced Concrete Special Inspector and Structural Steel and Bolting Special Inspector (as applicable to the type of construction involved) with 5 yrs related experience.

3.4.4.1.5. Plumbing - Graduate Mechanical Engineer or (BA/BS) graduate in construction management with 4 yrs related experience, or person with an ICC certification as a Commercial Plumbing Inspector with 5 yrs related experience.

3.4.4.1.6. Concrete, Pavements and Soils Materials Technician (present while performing tests) with 2 yrs experience for the appropriate area

3.4.4.1.7. Testing, Adjusting and Balancing Specialist must be a member (TAB) Personnel of AABC or an experienced technician of the firm certified by the NEBB (present while testing, adjusting, balancing).

3.4.4.1.8. Design Quality Control Manager Registered Architect or Professional Engineer (not required on the construction site)

3.4.4.1.9. Registered Fire Protection Engineer with 4 years related experience or engineering technician with 5 yrs related experience (but see requirements for Fire Protection Engineer of Record to witness final testing in Section 01 10 00, paragraph 5.10, Fire Protection).

3.4.4.1.10. QC personnel assigned to the installation of the telecommunication system or any of its components shall be Building Industry Consulting Services International (BICSI) Registered Cabling Installers, Technician Level. Submit documentation of current BICSI certification. In lieu of BICSI certification, QC personnel shall have a minimum of 5 years experience in the installation of the specified copper and fiber optic cable and components. They shall have factory or factory approved certification from each equipment manufacturer indicating that they are qualified to install and test the provided products. QC personnel shall witness and certify the testing of telecommunications cabling and equipment.

3.4.5. Additional Requirement

In addition to the above experience and/or education requirements the CQC System Manager shall have completed the course entitled "Construction Quality Management for Contractors". This course is periodically offered at Carolinas AGC at (704) 372-1450 X 5248 OR 5254. Inquire of the District or Division sponsoring the course for fees and other expenses involved, if any, for attendance at this course.

3.4.6. Organizational Changes

When it is necessary to make changes to the CQC staff, the Contractor shall revise the CQC Plan to reflect the changes and submit the changes to the Contracting Officer for acceptance.

3.5. SUBMITTALS AND DELIVERABLES

Make submittals as specified in Section 01 33 00 ***SUBMITTAL PROCEDURES***. The CQC organization shall certify that all submittals and deliverables are in compliance with the contract requirements.

3.6. CONTROL

Contractor Quality Control is the means by which the Contractor ensures that the construction, to include that of subcontractors and suppliers, complies with the requirements of the contract. The CQC organization shall conduct at least three phases of control for each definable feature of the construction work as follows:

3.6.1. Preparatory Phase

Perform this phase prior to beginning work on each definable feature of work, after all required plans/documents/materials are approved/accepted, and after copies are at the work site. This phase shall include:

3.6.1.1. A review of each paragraph of applicable specifications, reference codes, and standards. Make a copy of those sections of referenced codes and standards applicable to that portion of the work to be accomplished in the field at the preparatory inspection. Maintain these copies in the field, available for use by Government personnel until final acceptance of the work.

3.6.1.2. A review of the contract drawings.

3.6.1.3. A check to assure that all materials and/or equipment have been tested, submitted, and approved.

3.6.1.4. Review of provisions that have been made to provide required control inspection and testing.

3.6.1.5. Examination of the work area to assure that all required preliminary work has been completed and is in compliance with the contract.

3.6.1.6. A physical examination of required materials, equipment, and sample work to assure that they are on hand, conform to approved shop drawings or submitted data, and are properly stored.

3.6.1.7. A review of the appropriate activity hazard analysis to assure safety requirements are met.

3.6.1.8. Discussion of procedures for controlling quality of the work including repetitive deficiencies. Document construction tolerances and workmanship standards for that feature of work.

3.6.1.9. A check to ensure that the portion of the plan for the work to be performed has been accepted by the Contracting Officer.

3.6.1.10. Discussion of the initial control phase.

3.6.1.11. Notify the Government at least 24 hours in advance of beginning the preparatory control phase. This phase shall include a meeting conducted by the CQC System Manager and attended by the superintendent, other CQC personnel (as applicable), and the foreman responsible for the definable feature. Document the results of the preparatory phase actions by separate minutes prepared by the CQC System Manager and attached to the daily CQC report. The Contractor shall instruct applicable workers as to the acceptable level of workmanship required in order to meet contract specifications.

3.6.2. Initial Phase

Accomplish this phase at the beginning of a definable feature of work. Include the following actions:

3.6.2.1. Check work to ensure that it is in full compliance with contract requirements. Review minutes of the preparatory meeting.

3.6.2.2. Verify adequacy of controls to ensure full contract compliance. Verify required control inspection and testing.

3.6.2.3. Establish level of workmanship and verify that it meets minimum acceptable workmanship standards. Compare with required sample panels as appropriate.

3.6.2.4. Resolve all differences.

3.6.2.5. Check safety to include compliance with and upgrading of the Accident Prevention plan and activity hazard analysis. Review the activity analysis with each worker.

3.6.2.6. Notify the Government at least 24 hours in advance of beginning the initial phase. The CQC System Manager shall prepare and attach to the daily CQC report separate minutes of this phase. Indicate exact location of initial phase for future reference and comparison with follow-up phases.

3.6.2.7. Repeat the initial phase any time acceptable specified quality standards are not being met.

3.6.3. Follow-up Phase

Perform daily checks to assure control activities, including control testing, are providing continued compliance with contract requirements, until completion of the particular feature of work. The checks shall be made a matter of record in the CQC documentation. Conduct final follow-up checks and correct deficiencies prior to the start of additional features of work which may be affected by the deficient work. Do not build upon nor conceal non-conforming work.

3.6.4. Additional Preparatory and Initial Phases

Conduct additional preparatory and initial phases on the same definable features of work if: the quality of on-going work is unacceptable; if there are changes in the applicable CQC staff, onsite production supervision or work crew; if work on a definable feature is resumed after a substantial period of inactivity; or if other problems develop.

3.7. TESTS

3.7.1. Testing Procedure

Perform specified or required tests to verify that control measures are adequate to provide a product which conforms to contract requirements and project design documents. Upon request, furnish to the Government

duplicate samples of test specimens for possible testing by the Government. Testing includes operation and/or acceptance tests when specified. The Contractor shall procure the services of a Corps of Engineers approved testing laboratory, or establish an approved testing laboratory at the project site. The Contractor may elect to use a laboratory certified and accredited by the Concrete and cement Reference Laboratory (CCRL) or by AASHTO Materials Reference Laboratory (AMRL) for testing procedures that those organizations certify. The Contractor shall perform the following activities and record and provide the following data:

3.7.1.1. Verify that testing procedures comply with contract requirements and project design documents.

3.7.1.2. Verify that facilities and testing equipment are available and comply with testing standards.

3.7.1.3. Check test instrument calibration data against certified standards.

3.7.1.4. Verify that recording forms and test identification control number system, including all of the test documentation requirements, have been prepared.

3.7.1.5. Include results of all tests taken, both passing and failing tests, recorded on the CQC report for the date taken. Include specification paragraph reference, location where tests were taken, and the sequential control number identifying the test. If approved by the Contracting Officer, actual test reports may be submitted later with a reference to the test number and date taken. Provide an information copy of tests performed by an offsite or commercial test facility directly to the Contracting Officer. Failure to submit timely test reports as stated may result in nonpayment for related work performed and disapproval of the test facility for this contract.

3.7.2. Testing Laboratories

3.7.2.1. Capability Check

The Government reserves the right to check laboratory equipment in the proposed laboratory for compliance with the standards set forth in the contract specifications and to check the laboratory technician's testing procedures and techniques. Laboratories utilized for testing soils, concrete, asphalt, and steel shall meet criteria detailed in ASTM D 3740 and ASTM E 329.

3.7.2.2. Capability Recheck

If the selected laboratory fails the capability check, the Government will assess the Contractor a charge of $1,375 to reimburse the Government for each succeeding recheck of the laboratory or the checking of a subsequently selected laboratory. Such costs will be deducted from the contract amount due the Contractor.

3.7.3. Onsite Laboratory

The Government reserves the right to utilize the Contractor's control testing laboratory and equipment to make assurance tests, and to check the Contractor's testing procedures, techniques, and test results at no additional cost to the Government.

3.7.4. Furnishing or Transportation of Samples for Government Quality Assurance Testing

The Contractor is responsible for costs incidental to the transportation of samples or materials. Deliver samples of materials for test verification and acceptance testing by the Government to the Corps of Engineers Laboratory, f.o.b., at the following address:

- For delivery by mail:

  US Army Engineer District, Savannah

  Environmental & Materials Unit

  200 North Cobb Parkway, Building 400, Suite 404

  Marietta, GA 30062
- For other deliveries:

  N/A

N/A

N/A

N/A

The area or resident office will coordinate, exact delivery location, and dates for each specific test.

3.8. COMPLETION INSPECTION

3.8.1. Punch-Out Inspection

Near the end of the work, or any increment of the work established by a time stated in the SPECIAL CONTRACT REQUIREMENTS Clause, "Commencement, Prosecution, and Completion of Work", or by the specifications, the CQC Manager shall conduct an inspection of the work. Prepare a punch list of items which do not conform to the approved drawings and specifications and include in the CQC documentation, as required by paragraph DOCUMENTATION. The list of deficiencies shall include the estimated date by which the deficiencies will be corrected. The CQC System Manager or staff shall make a second inspection to ascertain that all deficiencies have been corrected. Once this is accomplished, the Contractor shall notify the Government that the facility is ready for the Government Pre-Final inspection.

3.8.2. Pre-Final Inspection

As soon as practicable after the notification above, the Government will perform the pre-final inspection to verify that the facility is complete and ready to be occupied. A Government Pre-Final Punch List may be developed as a result of this inspection. The Contractor's CQC System Manager shall ensure that all items on this list have been corrected before notifying the Government, so that a Final inspection with the customer can be scheduled. Correct any items noted on the Pre-Final inspection in a timely manner. Accomplish these inspections and any deficiency corrections required by this paragraph within the time slated for completion of the entire work or any particular increment of the work if the project is divided into increments by separate completion dates.

3.8.3. Final Acceptance Inspection

The Contractor's Quality Control Inspection personnel, plus the superintendent or other primary management person, and the Contracting Officer's Representative shall attend the final acceptance inspection. Additional Government personnel including, but not limited to, those from Base/Post Civil Facility Engineer user groups and major commands may also attend. The Government will formally schedule the final acceptance inspection based upon results of the Pre-Final inspection. Provide notice to the Government at least 14 days prior to the final acceptance inspection and include the Contractor's assurance that all specific items previously identified to the Contractor as being unacceptable, along with all remaining work performed under the contract, will be complete and acceptable by the date scheduled for the final acceptance inspection. Failure of the Contractor to have all contract work acceptably complete for this inspection will be cause for the Contracting Officer to bill the Contractor for the Government's additional inspection cost in accordance with the contract clause titled "Inspection of Construction".

3.9. DOCUMENTATION

3.9.1. Maintain current records providing factual evidence that required quality control activities and/or tests have been performed. These records shall include the work of subcontractors and suppliers using government-provided software, QCS (see Section 01 45 01.10). The report includes, as a minimum, the following information:

3.9.1.1. Contractor/subcontractor and their area of responsibility.

3.9.1.2. Operating plant/equipment with hours worked, idle, or down for repair.

3.9.1.3. Work performed each day, giving location, description, and by whom. When Network Analysis (NAS) is used, identify each phase of work performed each day by NAS activity number.

3.9.1.4. Test and/or control activities performed with results and references to specifications/drawings requirements. Identify the applicable control phase (Preparatory, Initial, Follow-up). List deficiencies noted, along with corrective action.

3.9.1.5. Quantity of materials received at the site with statement as to acceptability, storage, and reference to specifications/drawings requirements.

3.9.1.6. Submittals and deliverables reviewed, with contract reference, by whom, and action taken.

3.9.1.7. Offsite surveillance activities, including actions taken.

3.9.1.8. Job safety evaluations stating what was checked, results, and instructions or corrective actions.

3.9.1.9. Instructions given/received and conflicts in plans and/or specifications.

3.9.1.10. Provide documentation of design quality control activities. For independent design reviews, provide, as a minimum, identity of the ITR team, the ITR review comments, responses and the record of resolution of the comments.

3.9.2. Contractor's verification statement.

These records shall indicate a description of trades working on the project; the number of personnel working; weather conditions encountered; and any delays encountered. These records shall cover both conforming and deficient features and shall include a statement that equipment and materials incorporated in the work and workmanship comply with the contract. Furnish the original and one copy of these records in report form to the Government daily within 24 hours after the date covered by the report, except that reports need not be submitted for days on which no work is performed. As a minimum, submit one report for every 7 days of no work and on the last day of a no work period. Account for all calendar days throughout the life of the contract. The first report following a day of no work shall be for that day only. The CQC System Manager shall sign and date reports. The report shall include copies of test reports and copies of reports prepared by all subordinate quality control personnel. The Contractor may submit these forms electronically, in lieu of hard copy.

3.10. NOTIFICATION OF NONCOMPLIANCE

The Contracting Officer will notify the Contractor of any detected noncompliance with the foregoing requirements. The Contractor shall take immediate corrective action after receipt of such notice. Such notice, when delivered to the Contractor at the work site, shall be deemed sufficient for the purpose of notification. If the Contractor fails or refuses to comply promptly, the Contracting Officer may issue an order stopping all or part of the work until satisfactory corrective action has been taken. No part of the time lost due to such stop orders shall be made the subject of claim for extension of time or for excess costs or damages by the Contractor.

End of Section 01 45 04.00 10

SECTION 01 50 02
TEMPORARY CONSTRUCTION FACILITIES

1.0 OVERVIEW

1.1. GENERAL REQUIREMENTS

1.2. AVAILABILITY AND USE OF UTILITY SERVICES

1.3. BULLETIN BOARD, PROJECT SIGN, AND PROJECT SAFETY SIGN

1.4. PROTECTION AND MAINTENANCE OF TRAFFIC

1.5. MAINTENANCE OF CONSTRUCTION SITE

1.0 OVERVIEW

1.1. GENERAL REQUIREMENTS

1.1.1. Site Plan

Prepare a site plan indicating the proposed location and dimensions of any area to be fenced and used by the Contractor, the number of trailers to be used, avenues of ingress/egress to the fenced area and details of the fence installation. Identify any areas which may have to be graveled to prevent the tracking of mud. Also indicate if the use of a supplemental or other staging area is desired.

1.2. AVAILABILITY AND USE OF UTILITY SERVICES

1.2.1. See Section 00 72 00, Contract Clauses and Section 00 73 00, Special Contract Requirements, for Utility Availability requirements.

1.2.2. Sanitation

Provide and maintain within the construction area minimum field-type sanitary facilities approved by the Contracting Officer. Government toilet facilities will not be available to Contractor's personnel.

1.2.3. Telephone

Make arrangements and pay all costs for desired telephone facilities.

1.3. BULLETIN BOARD, PROJECT SIGN, AND PROJECT SAFETY SIGN

1.3.1. Bulletin Board

Immediately upon beginning of onsite work, provide a weatherproof glass-covered bulletin board not less than 36 by 48 inches in size for displaying the Equal Employment Opportunity poster, a copy of the wage decision contained in the contract, Wage Rate Information poster, and other information approved by the Contracting Officer. Locate the bulletin board at the project site in a conspicuous place easily accessible to all employees, as approved by the Contracting Officer. Display legible copies of the aforementioned data until work is completed. Remove the bulletin board from the site upon completion of the project.

1.3.2. Project and Safety Signs

Erect a project sign and a site safety sign with informational details as provided by the Government at the Post award conference, within 15 days prior to any work activity on project site. Update the safety sign data daily, with light colored metallic or non-metallic numerals. Remove the signs from the site upon completion of the project. Engineer Pamphlet EP 310-1-6a contains the standardized layout and construction details for the signs. It can be found through a GOOGLE Search or try http://www.usace.army.mil/publications/eng-pamphlets/ep310-1-6a/s-16.pdf.

1.4. PROTECTION AND MAINTENANCE OF TRAFFIC

Provide access and temporary relocated roads as necessary to maintain traffic. Maintain and protect traffic on all affected roads during the construction period except as otherwise specifically directed by the Contracting Officer. Take measures for the protection and diversion of traffic, including the provision of watchmen and flagmen, erection of barricades, placing of lights around and in front of equipment and the work, and the erection and maintenance of adequate warning, danger, and direction signs, as required by the State and local authorities having jurisdiction. Protect the traveling public from damage to person and property.

The Contractor's traffic on roads selected for hauling material to and from the site shall interfere as little as possible with public traffic. Investigate the adequacy of existing roads and the allowable load limit on these roads. Repair any damage to roads caused by construction operations.

1.4.1. Haul Roads

The Contractor shall, at its own expense, construct access and haul roads necessary for proper prosecution of the work under this contract. Construct haul roads with suitable grades and widths. Avoid sharp curves, blind corners, and dangerous cross traffic. Provide necessary lighting, signs, barricades, and distinctive markings for the safe movement of traffic. The method of dust control, although optional, shall be adequate to ensure safe operation at all times. Location, grade, width, and alignment of construction and hauling roads shall be subject to approval by the Contracting Officer. Provide adequate lighting to assure full and clear visibility for full width of haul road and work areas during any night work operations. Remove haul roads designated by the Contracting Officer upon completion of the work and restore those areas.

1.4.2. Barricades

Erect and maintain temporary barricades to limit public access to hazardous areas. Barricades shall be required whenever safe public access to paved areas such as roads, parking areas or sidewalks is prevented by construction activities or as otherwise necessary to ensure the safety of both pedestrian and vehicular traffic. Securely place barricades clearly visible with adequate illumination to provide sufficient visual warning of the hazard during both day and night.

1.5. MAINTENANCE OF CONSTRUCTION SITE

Mow grass and vegetation located within the boundaries of the construction site for the duration of the project, from NTP to contract completion. Edge or neatly trim grass and vegetation along fences, buildings, under trailers, and in areas not accessible to mowers from NTP to contract completion.

End of Section 01 50 02

SECTION 01 57 20.00 10
ENVIRONMENTAL PROTECTION

1.0 GENERAL REQUIREMENTS

1.1. SUBCONTRACTORS

1.2. ENVIRONMENTAL PROTECTION PLAN

1.3. PROTECTION FEATURES

1.4. ENVIRONMENTAL ASSESSMENT OF CONTRACT DEVIATIONS

1.5. NOTIFICATION

2.0 PRODUCTS (NOT USED)

3.0 EXECUTION

3.1. LAND RESOURCES

3.2. WATER RESOURCES

3.3. AIR RESOURCES

3.4. CHEMICAL MATERIALS MANAGEMENT AND WASTE DISPOSAL

3.5. RECYCLING AND WASTE MINIMIZATION

3.6. HISTORICAL, ARCHAEOLOGICAL, AND CULTURAL RESOURCES

3.7. BIOLOGICAL RESOURCES

3.8. INTEGRATED PEST MANAGEMENT

3.9. PREVIOUSLY USED EQUIPMENT

3.10. MILITARY MUNITIONS

3.11. TRAINING OF CONTRACTOR PERSONNEL

3.12. POST CONSTRUCTION CLEANUP

1.0 GENERAL REQUIREMENTS

Minimize environmental pollution and damage that may occur as the result of construction operations. Protect the environmental resources within the project boundaries and those affected outside the limits of permanent work during the entire duration of this contract. Comply with all applicable environmental Federal, State, and local laws and regulations. The Contractor shall be responsible for any delays resulting from failure to comply with environmental laws and regulations

1.1. SUBCONTRACTORS

Ensure compliance with this section by subcontractors.

1.2. ENVIRONMENTAL PROTECTION PLAN

1.2.1. The purpose of the Environmental Protection Plan is to present a comprehensive overview of known or potential environmental issues which the Contractor must address during construction. Define issues of concern within the Environmental Protection Plan as outlined in this section. Address each topic in the plan at a level of detail commensurate with the environmental issue and required construction task(s). Identify and discuss topics or issues which are not identified in this section, but which the Contractor considers necessary, after those items formally identified in this section. Prior to commencing construction activities or delivery of materials to the site, submit the Plan for review and Government approval. The Contractor shall meet with the Government prior to implementation of the Environmental Protection Plan, for the purpose of discussing the implementation of the initial plan; possible subsequent additions and revisions to the plan including any reporting requirements; and methods for administration of the Contractor's Environmental Plans. Maintain and keep the Environmental Protection Plan current onsite.

1.2.2. Compliance

No requirement in this Section shall be construed as relieving the Contractor of any applicable Federal, State, and local environmental protection laws and regulations. During Construction, the Contractor shall be responsible for identifying, implementing, and submitting for approval any additional requirements to be included in the Environmental Protection Plan.

1.2.3. Contents

The plan shall include, but shall not be limited to, the following:

1.2.3.1. Name(s) of person(s) within the Contractor's organization who is(are) responsible for ensuring adherence to the Environmental Protection Plan.

1.2.3.2. Name(s) and qualifications of person(s) responsible for manifesting hazardous waste to be removed from the site, if applicable

1.2.3.3. Name(s) and qualifications of person(s) responsible for training the Contractor's environmental protection personnel

1.2.3.4. Description of the Contractor's environmental protection personnel training program

1.2.3.5. An erosion and sediment control plan which identifies the type and location of the erosion and sediment controls to be provided. Include monitoring and reporting requirements to assure that the control measures are in compliance with the erosion and sediment control plan, Federal, State, and local laws and regulations. A Storm Water Pollution Prevention Plan (SWPPP) may be substituted for this plan.

1.2.3.6. Drawings showing locations of proposed temporary excavations or embankments for haul roads, stream crossings, material storage areas, structures, sanitary facilities, and stockpiles of excess or spoil materials including methods to control runoff and to contain materials on the site

1.2.3.7. Traffic control plans including measures to reduce erosion of temporary roadbeds by construction traffic, especially during wet weather. Include measures to minimize the amount of mud transported onto paved public roads by vehicles or runoff.

1.2.3.8. Work area plan showing the proposed activity in each portion of the area and identifying the areas of limited use or nonuse. Include measures for marking the limits of use areas including methods for protection of features to be preserved within authorized work areas.

1.2.3.9. Drawing showing the location of on-installation borrow areas.

1.2.3.10. A spill control plan shall include the procedures, instructions, and reports to be used in the event of an unforeseen spill of a substance regulated by 40 CFR 68, 40 CFR 302, 40 CFR 355, and/or regulated under State or Local laws and regulations. The spill control plan supplements the requirements of EM 385-1-1. This plan shall include as a minimum:

(a) The name of the individual who will report any spills or hazardous substance releases and who will follow up with complete documentation. This individual shall immediately notify the Government and the local Fire Department in addition to the legally required Federal, State, and local reporting channels (including the National Response Center 1-800-424-8802) if a reportable quantity is released to the environment. The plan shall contain a list of the required reporting channels and telephone numbers.

(b) The name and qualifications of the individual who will be responsible for implementing and supervising the containment and cleanup

(c) Training requirements for Contractor's personnel and methods of accomplishing the training

(d) A list of materials and equipment to be immediately available at the job site, tailored to cleanup work of the potential hazard(s) identified.

(e) The names and locations of suppliers of containment materials and locations of additional fuel oil recovery, cleanup, restoration, and material-placement equipment available in case of an unforeseen spill emergency

(f) The methods and procedures to be used for expeditious contaminant cleanup

1.2.3.11. A solid waste management plan identifying waste minimization, collection, and disposals methods, waste streams (type and quantity), and locations for solid waste diversion/disposal including clearing debris and C&D waste that is diverted (salvaged, reused, or recycled). Detail the contractor's actions to comply with, and to participate in, Federal, state, regional, local government, and installation sponsored recycling programs to reduce the volume of solid waste at the source. Identify any subcontractors responsible for the transportation, salvage and disposal of solid waste. Submit licenses or permits for solid waste disposal sites that are not a commercial operating facility. Attach evidence of the facility's ability to accept the solid waste to this plan. A construction and demolition waste management plan, similar to the plan specified in the UFGS 01 74 19 (formerly 01572) may be used as the non-hazardous solid waste management plan. Provide a Non-Hazardous Solid Waste Diversion Report. Submit the report on the first working day after the first quarter that non-hazardous solid waste has been disposed and/or diverted and each quarter thereafter (e.g. the first working day of January, April, July, and October) until the end of the project. Additionally, a summary report, with all data fields, is required at the end of the project. The report shall indicate the total type and amount of waste generated, total type and amount of waste diverted, type and amount of waste sent to waste-to-energy facility and alternative daily cover, in tons along with the percent that was diverted. Maintain, track and report construction and demolition waste data in a manner such that the installation can enter the data into the Army SWAR database, which separates data by type of material. A cumulative report in LEED Letter Template format may be used but must be modified to include the date disposed of/diverted and include the above stated diversion data. NOTE: The Solid Waste Diversion Reports are separate documentation than the LEED documentation.

1.2.3.12. DELETED.

1.2.3.13. An air pollution control plan detailing provisions to assure that dust, debris, materials, trash, etc., do not become air borne and travel off the project site.

1.2.3.14. A contaminant prevention plan that: identifies potentially hazardous substances to be used on the job site; identifies the intended actions to prevent introduction of such materials into the air, water, or ground; and details provisions for compliance with Federal, State, and local laws and regulations for storage and handling of

these materials. In accordance with EM 385-1-1, include a copy of the Material Safety Data Sheets (MSDS) and the maximum quantity of each hazardous material to be on site at any given time in the contaminant prevention plan. Update the plan as new hazardous materials are brought on site or removed from the site. Reference this plan in the storm water pollution prevention plan, as applicable.

1.2.3.15. A waste water management plan that identifies the methods and procedures for management and/or discharge of waste waters which are directly derived from construction activities, such as concrete curing water, clean-up water, dewatering of ground water, disinfection water, hydrostatic test water, and water used in flushing of lines. If a settling/retention pond is required, include the design of the pond including drawings, removal plan, and testing requirements for possible pollutants. If land application will be the method of disposal for the waste water, include a sketch showing the location for land application along with a description of the pretreatment methods to be implemented and any required permits. If surface discharge will be the method of disposal, include a copy of the permit and associated documents as an attachment prior to discharging the waste water. If disposal is to a sanitary sewer, include documentation that the waste water treatment plant Operator has approved the flow rate, volume, and type of discharge.

1.2.3.16. A historical, archaeological, cultural resources biological resources and wetlands plan that defines procedures for identifying and protecting historical, archaeological, cultural resources, biological resources and wetlands known to be on the project site: and/or identifies procedures to be followed if historical archaeological, cultural resources, biological resources and wetlands not previously known to be onsite or in the area are discovered during construction. Include methods to assure the protection of known or discovered resources and shall identify lines of communication between Contractor personnel and the Government.

1.2.3.17. A pesticide treatment plan, updated, as information becomes available. Include: sequence of treatment, dates, times, locations, pesticide trade name, EPA registration numbers, authorized uses, chemical composition, formulation, original and applied concentration, application rates of active ingredient (i.e. pounds of active ingredient applied), equipment used for application and calibration of equipment. The Contractor is responsible for Federal, State, Regional and Local pest management record keeping and reporting requirements as well as any additional Installation specific requirements. Follow AR 200-1, Chapter 5, Pest Management, Section 5-4, “Program Requirements” for data required to be reported to the Installation.

1.3. PROTECTION FEATURES

This paragraph supplements the Contract Clause PROTECTION OF EXISTING VEGETATION, STRUCTURES, EQUIPMENT, UTILITIES AND IMPROVEMENTS. Prior to start of any onsite construction activities, the Contractor and the Government shall make a joint condition survey. Immediately following the survey, the Contractor shall prepare a brief report including a plan describing the features requiring protection under the provisions of the Contract Clauses, which are not specifically identified on the drawings as environmental features requiring protection along with the condition of trees, shrubs and grassed areas immediately adjacent to the site of work and adjacent to the Contractor's assigned storage area and access route(s), as applicable. Both the Contractor and the Government will sign this survey, upon mutual agreement as to its accuracy and completeness. The Contractor develop a plan that depicts how it will protect those environmental features included in the survey report and any indicated on the drawings, regardless of interference which their preservation may cause to the Contractor's work under the contract.

1.4. ENVIRONMENTAL ASSESSMENT OF CONTRACT DEVIATIONS

Any deviations, requested by the Contractor, from the drawings, plans and specifications which may have an environmental impact will be subject to approval by the Government and may require an extended review, processing, and approval time. The Government reserves the right to disapprove alternate methods, even if they are more cost effective, if the Government determines that the proposed alternate method will have an adverse environmental impact.

1.5. NOTIFICATION

The Government will notify the Contractor in writing of any observed noncompliance with Federal, State or local environmental laws or regulations, permits, and other elements of the Contractor's Environmental Protection plan. The Contractor shall, after receipt of such notice, inform the Government of the proposed corrective action and take such action when approved by the Government. The Government may issue an order stopping all or part of the

work until satisfactory corrective action has been taken. No time extensions shall be granted or equitable adjustments allowed to the Contractor for any such suspensions. This is in addition to any other actions the Government may take under the contract, or in accordance with the Federal Acquisition Regulation or Federal Law.

2.0 PRODUCTS (NOT USED)

3.0 EXECUTION

3.1. LAND RESOURCES

Confine all activities to areas defined by the drawings and specifications. Prior to the beginning of any construction, identify any land resources to be preserved within the work area. Except in areas indicated on the drawings or specified to be cleared, do not remove, cut, deface, injure, or destroy land resources including trees, shrubs, vines, grasses, topsoil, and land forms without approval. Do not attach or fasten any ropes, cables, or guys to any trees for anchorage unless specifically authorized. Provide effective protection for land and vegetation resources at all times as defined in the following subparagraphs. Remove all stone, soil, or other materials displaced into uncleared areas..

3.1.1. Work Area Limits

Prior to commencing construction activities, mark the areas that need not be disturbed under this contract. Mark or fence isolated areas within the general work area which are not to be disturbed. Protect monuments and markers before construction operations commence. Where construction operations are to be conducted during darkness, any markers shall be visible in the dark. Personnel shall be knowledgeable of the purpose for marking and/or protecting particular objects.

3.1.2. Landscape

Clearly identify trees, shrubs, vines, grasses, land forms and other landscape features indicated and defined on the drawings to be preserved by marking, fencing, or wrapping with boards, or any other approved techniques. Restore landscape features damaged or destroyed during construction operations outside the limits of the approved work area.

3.1.3. Erosion and Sediment Controls

Provide erosion and sediment control measures in accordance with Federal, State, and local laws and regulations. Coordinate with approving authorities (federal, state, etc.) for specific requirements to be included in the plan. The erosion and sediment controls selected and maintained by the Contractor shall be such that water quality standards are not violated as a result of the Contractor's construction activities. Keep the area of bare soil exposed at any one time by construction operations to a minimum necessary. Construct or install temporary and permanent erosion and sediment control best management practices (BMPs). BMPs may include, but not be limited to, vegetation cover, stream bank stabilization, slope stabilization, silt fences, construction of terraces, interceptor channels, sediment traps, inlet and outfall protection, diversion channels, and sedimentation basins. Remove any temporary measures after the area has been stabilized.

3.1.4. Contractor Facilities and Work Areas

Place field offices, staging areas, stockpile storage, and temporary buildings in areas designated on the drawings or as directed by the Government. Make only approved temporary movement or relocation of Contractor facilities. Provide erosion and sediment controls for on-site borrow and spoil areas to prevent sediment from entering nearby waters. Control temporary excavation and embankments for plant and/or work areas to protect adjacent areas.

3.2. WATER RESOURCES

Monitor construction activities to prevent pollution of surface and ground waters. Do not apply toxic or hazardous chemicals to soil or vegetation unless otherwise indicated. Monitor all water areas affected by construction activities. For construction activities immediately adjacent to impaired surface waters, the Contractor shall be capable of quantifying sediment or pollutant loading to that surface water when required by state or federally issued Clean Water Act permits.

3.2.1. Stream Crossings

Stream crossings shall allow movement of materials or equipment without violating water pollution control standards of the Federal, State, and local governments or impede state-designated flows.

3.2.2. Wetlands

Do not enter, disturb, destroy, or allow discharge of contaminants into any wetlands.

3.3. AIR RESOURCES

Comply with all Federal and State air emission and performance laws and standards for equipment operation, activities, or processes.

3.3.1. Particulates

Control dust particles; aerosols and gaseous by-products from construction activities; and processing and preparation of materials, such as from asphaltic batch plants, including weekends, holidays and hours when work is not in progress. Maintain excavations, stockpiles, haul roads, permanent and temporary access roads, plant sites, spoil areas, borrow areas, and other work areas within or outside the project boundaries free from particulates which would cause the Federal, State, and local air pollution standards to be exceeded or which would cause a hazard or a nuisance. Sprinkling, chemical treatment of an approved type, baghouse, scrubbers, electrostatic precipitators or other methods are permitted to control particulates in the work area. Sprinkling, to be efficient, must be repeated to keep the disturbed area damp at all times. Provide sufficient, competent equipment available to accomplish these tasks. Perform particulate control as the work proceeds and whenever a particulate nuisance or hazard occurs. Comply with all State and local visibility regulations.

3.3.2. Odors

Control odors from construction activities at all times. Odors shall not cause a health hazard and shall be in compliance with State regulations and/or local ordinances.

3.3.3. Sound Intrusions

Keep construction activities under surveillance and control to minimize environment damage by noise. Comply with the provisions of the state and Installation rules.

3.3.4. Burning

Burning is not allowed on the project site unless specified in other sections of the specifications or by written authorization. Specific times, locations, and manners of burning shall be subject to approval.

3.4. CHEMICAL MATERIALS MANAGEMENT AND WASTE DISPOSAL

Disposal of wastes shall be as directed below, unless otherwise specified in other sections and/or shown on the drawings.

3.4.1. Solid Wastes

Place solid wastes (excluding clearing debris) in containers which are emptied on a regular schedule. Conduct handling, storage, and disposal to prevent contamination. Employ segregation measures so that no hazardous or toxic waste will become co-mingled with solid waste. Transport solid waste off Government property and dispose of it in compliance with Federal, State, and local requirements for solid waste disposal. The minimum acceptable off-site solid waste disposal option is a Subtitle D RCRA permitted landfill. Verify that the selected transporters and disposal facilities have the necessary permits and licenses to operate. Comply with Federal, State, and local laws and regulations pertaining to the use of landfill areas.

3.4.2. Chemicals and Chemical Wastes

Dispense chemicals, ensuring no spillage to the ground or water. Perform and document periodic inspections of dispensing areas to identify leakage and initiate corrective action. The Government may periodically review this documentation. Collect chemical waste in corrosion resistant, compatible containers. Monitor and remove collection drums to a staging or storage area when contents are within 6 inches of the top. Classify, manage, store, and dispose of wastes in accordance with Federal, State, and local laws and regulations.

3.4.3. Contractor Generated Hazardous Wastes/Excess Hazardous Materials

Hazardous wastes are defined in 40 CFR 261, or are as defined by applicable state and local regulations. Hazardous materials are defined in 49 CFR 171 - 178. At a minimum, manage and store hazardous waste in compliance with 40 CFR 262. Take sufficient measures to prevent spillage of hazardous and toxic materials during dispensing. Segregate hazardous waste from other materials and wastes; protect it from the weather by placing it in a safe covered location and take precautionary measures, such as berming or other appropriate measures, against accidental spillage. Store, describe, package, label, mark, and placard hazardous waste and hazardous material in accordance with 49 CFR 171 - 178, state, and local laws and regulations. Transport Contractor generated hazardous waste off Government property in accordance with the Environmental Protection Agency and the Department of Transportation laws and regulations. Dispose of hazardous waste in compliance with Federal, State and local laws and regulations. Immediately report spills of hazardous or toxic materials to the Government and the Facility Environmental Office. Contractor will be responsible for cleanup and cleanup costs due to spills. Contractor is responsible for the disposition of Contractor generated hazardous waste and excess hazardous materials.

3.4.4. Fuel and Lubricants

Conduct storage, fueling and lubrication of equipment and motor vehicles in a manner that affords the maximum protection against spill and evaporation. Manage and store fuel, lubricants and oil in accordance with all Federal, State, Regional, and local laws and regulations.

3.5. RECYCLING AND WASTE MINIMIZATION

Participate in State and local government sponsored recycling programs. The Contractor is further encouraged to minimize solid waste generation throughout the duration of the project. Line and berm fueling areas and establish storm water control structures at discharge points for site run-off. Keep a liquid containment clean-up kit available at the fueling area.

3.6. HISTORICAL, ARCHAEOLOGICAL, AND CULTURAL RESOURCES

Existing historical, archaeological, and cultural resources within the Contractor's work area are shown on the drawings. Protect and preserve these resources during the life of the Contract. Temporarily suspend all activities that may damage or alter such resources, if any previously unidentified or unanticipated historical, archaeological, and cultural resources are discovered or found during excavation or other construction activities. Resources covered by this paragraph include but are not limited to: any human skeletal remains or burials; artifacts; shell, midden, bone, charcoal, or other deposits; rock or coral alignments, pavings, wall, or other constructed features; and any indication of agricultural or other human activities. Upon such discovery or find, notify the Government so that the appropriate authorities may be notified and a determination made as to their significance and what, if any, special disposition of the finds should be made. Cease all activities that may result in impact to or the destruction of these resources. Secure the area and prevent employees or other persons from trespassing on, removing, or otherwise disturbing such resources.

3.7. BIOLOGICAL RESOURCES

Minimize interference with, disturbance to, and damage to fish, wildlife, and plants, including their habitat. Protect threatened and endangered animal and plant species including their habitat in accordance with Federal, State, Regional, and local laws and regulations.

3.8. INTEGRATED PEST MANAGEMENT

Coordinate, through the Government, with the Installation Pest Management Coordinator (IPMC) at the earliest possible time prior to pesticide application, in order to minimize impacts to existing fauna and flora. Discuss

integrated pest management strategies with the IPMC and receive concurrence from the IPMC, through the COR, prior to the application of any pesticide associated with these specifications. Give IMPC personnel the opportunity to be present at all meetings concerning treatment measures for pest or disease control and during application of the pesticide. The use and management of pesticides are regulated under 40 CFR 152 - 186.

3.8.1. Pesticide Delivery and Storage

Deliver pesticides, approved for use on the Installation, to the site in the original, unopened containers bearing legible labels indicating the EPA registration number and the manufacturer's registered uses.

3.8.2. Qualifications

Use the services of a subcontractor for pesticide application whose principal business is pest control. The subcontractor shall be licensed and certified in the state where the work is to be performed.

3.8.3. Pesticide Handling Requirements

Formulate, treat with, and dispose of pesticides and associated containers in accordance with label directions.

3.8.4. Application

A state certified pesticide applicator shall apply pesticides in accordance with EPA label restrictions and recommendations.

3.9. PREVIOUSLY USED EQUIPMENT

Clean all previously used construction equipment prior to bringing it onto the project site. Ensure that the equipment is free from soil residuals, egg deposits from plant pests, noxious weeds, and plant seeds. Consult with the USDA jurisdictional office for additional cleaning requirements.

3.10. MILITARY MUNITIONS

Immediately stop work in that area and immediately inform the Government, in the event military munitions, as defined in 40 CFR 260, are discovered or uncovered.

3.11. TRAINING OF CONTRACTOR PERSONNEL

Train personnel in all phases of environmental protection and pollution control. Conduct environmental protection/pollution control meetings for all Contractor personnel prior to commencing construction activities. Conduct additional meetings for new personnel and when site conditions change. The training and meeting agenda shall include methods of detecting and avoiding pollution; familiarization with statutory and contractual pollution standards; installation and care of devices, vegetative covers, and instruments required for monitoring purposes to ensure adequate and continuous environmental protection/pollution control; anticipated hazardous or toxic chemicals or wastes, and other regulated contaminants; recognition and protection of archaeological sites, artifacts, wetlands, and endangered species and their habitat that are known to be in the area.

3.12. POST CONSTRUCTION CLEANUP

Clean up all areas used for construction in accordance with Contract Clause: "Cleaning Up". Unless otherwise instructed in writing , obliterate all signs of temporary construction facilities such as haul roads, work area, structures, foundations of temporary structures, stockpiles of excess or waste materials, and other vestiges of construction prior to final acceptance of the work. Grade, fill and seed the entire disturbed area, unless otherwise indicated.

SECTION 01 62 35
RECYCLED/RECOVERED MATERIAL

1.0 GENERAL

1.1. REFERENCES

1.2. OBJECTIVES

1.3. EPA DESIGNATED ITEMS INCORPORATED IN THE WORK

1.4. EPA PROPOSED ITEMS INCORPORATED IN THE WORK

1.5. EPA LISTED ITEMS USED IN CONDUCT OF THE WORK BUT NOT INCORPORATED IN THE WORK

1.0 GENERAL

1.1. REFERENCES

The publications listed below form a part of this specification to the extent referenced. The publications are referred to within the text by the basic designation only.

- U.S. NATIONAL ARCHIVES AND RECORDS ADMINISTRATION (NARA)
- 40 CFR 247 Comprehensive Procurement Guideline for Products Containing Recovered Materials

1.2. OBJECTIVES

Government procurement policy is to acquire, in a cost effective manner, items containing the highest percentage of recycled and recovered materials practicable consistent with maintaining a satisfactory level of competition without adversely affecting performance requirements or exposing suppliers' employees to undue hazards from the recovered materials. The Environmental Protection Agency (EPA) has designated certain items which must contain a specified percent range of recovered or recycled materials. The Contractor shall make all reasonable efforts to use recycled and recovered materials in providing the EPA designated products and in otherwise utilizing recycled and recovered materials in the execution of the work.

1.3. EPA DESIGNATED ITEMS INCORPORATED IN THE WORK

Materials that have been designated by EPA as being products which are or can be made with recovered or recycled materials, when incorporated into the work under this contract, shall contain at least the minimum percentage of recycled or recovered materials indicated by EPA unless adequate justification (non-availability) for non-use is provided. When a designated item is specified as an option to a non-designated item, the designated item requirements apply only if the designated item is used in the work.

1.4. EPA PROPOSED ITEMS INCORPORATED IN THE WORK

Products other than those designated by EPA are still being researched and are being considered for future Comprehensive Procurement Guideline (CPG) designation. It is recommended that these items, when incorporated in the work under this contract, contain the highest practicable percentage of recycled or recovered materials, provided specified requirements are also met.

1.5. EPA LISTED ITEMS USED IN CONDUCT OF THE WORK BUT NOT INCORPORATED IN THE WORK

There are many products listed in 40 CFR 247 which have been designated or proposed by EPA to include recycled or recovered materials that may be use by the Contractor in performing the work but will not be incorporated into the work. These products include office products, temporary traffic control products, and pallets. It is recommended that these non-construction products, when used in the conduct of the work, contain the highest practicable percentage of recycled or recovered materials and that these products be recycled when no longer needed.

End of Section 01 62 35

SECTION 01 78 02.00 10
CLOSEOUT SUBMITTALS

1.0 OVERVIEW

1.1. SUBMITTALS

1.2. PROJECT RECORD DOCUMENTS

1.3. EQUIPMENT DATA

1.4. CONSTRUCTION WARRANTY MANAGEMENT

1.5. MECHANICAL TESTING, ADJUSTING, BALANCING, AND COMMISSIONING

1.6. OPERATION AND MAINTENANCE MANUALS

1.7. FIELD TRAINING

1.8. PRICING OF CONTRACTOR-FURNISHED AND INSTALLED PROPERTY AND GOVERNMENT-FURNISHED CONTRACTOR-INSTALLED PROPERTY

1.9. LEED REVIEW MEETINGS

1.10. RED ZONE MEETING

1.11. FINAL CLEANING

1.12. INTERIM FORM DD1354 "TRANSFER AND ACCEPTANCE OF MILITARY REAL PROPERTY

EXHIBIT 1 SAMPLE RED ZONE MEETING CHECKLIST

1.0 OVERVIEW

1.1. SUBMITTALS

Government approval is required for any submittals with a "G" designation; submittals not having a "G" designation are for Designer of Record approval or for information only. Submit the following in accordance with Section 01 33 00 submittals***:***

SD-02 Shop Drawings

– As-Built Drawings - G

▪ Drawings showing final as-built conditions of the project. Provide electronic drawing files as specified in Section 01 33 16, 3 sets of blue-line prints and one set of the approved working as-built drawings.

SD-03 Product Data

– As-Built Record of Equipment and Materials

▪ Two copies of the record listing the as-built materials and equipment incorporated into the construction of the project.

– Construction Warranty Management Plan

▪ Three sets of the construction warranty management plan containing information relevant to the warranty of materials and equipment incorporated into the construction project, including the starting date of warranty of construction. Furnish with each warranty the name, address, and telephone number of each of the guarantor's representatives nearest to the project location.

– Warranty Tags

▪ Two record copies of the warranty tags showing the layout and design.

– Final Cleaning

▪ Two copies of the listing of completed final clean-up items.

1.2. PROJECT RECORD DOCUMENTS

1.2.1. As-Built Drawings – G

An as-built drawing is a construction drawing revised to reflect the final as-built conditions of the project as a result of modifications and corrections to the project design required during construction. The final as-built drawings shall not have the appearance of marked up drawings, but that of professionally prepared drawings as if they were the "as designed" drawings.

1.2.2. Maintenance of As-Built Drawings

1.2.2.1. The Configuration Management Plan shall describe how the Contractor will maintain up-to-date drawings, how it will control and designate revisions to the drawings and specifications (In accordance with Special Contract Requirement: ***Deviating from the Accepted Design*** and Section 01 33 16: ***Design after Award***, the Designer of Record's approval is necessary for any revisions to the accepted design).

1.2.2.2. Make timely updates, carefully maintaining a record set of working as-built drawings at the job site, marked in red, of all changes and corrections from the construction drawings. Enter changes and corrections on drawings promptly to reflect "Current Construction". Perform this update no less frequently than weekly for the blue line drawings and update no less frequently than quarterly for the CADD/CAD and BIM files, which were prepared previously in accordance with Section 01 33 16. Include a confirmation that the as-builts are up to date with the submission of the monthly project schedule.

1.2.2.3. If the DB Contractor fails to maintain the as-built drawings as required herein, the Government will retain from the monthly progress payment, an amount representing the estimated monthly cost of maintaining the as-built drawings. Final payment with respect to separately priced facilities or the contract as a whole will be withheld until the Contractor submits acceptable as-built drawings and the Government approves them.

1.2.2.4. The marked-up set of drawings shall reflect any changes, alterations, adjustments or modifications. Changes must be reflected on all sheets affected by the change. Changes shall include marking the drawings to reflect structural details, foundation layouts, equipment sizes, and other extensions of design.

1.2.2.5. Typically, room numbers shown on the drawings are selected for design convenience and do not represent the actual numbers intended for use by the end user. Final as-built drawings shall reflect actual room numbers adopted by the end user.

1.2.2.6. If there is no separate contract line item (CLIN) for as-built drawings, the Government will withhold the amount of $35,000, or 1% of the present construction value, whichever is the greater, until the final as-built drawing submittal has been approved by the Government.

1.2.3. Underground Utilities

The drawings shall indicate, in addition to all changes and corrections, the actual location, kinds and sizes of all sub-surface utility lines. In order that the location of these lines and appurtenances may be determined in the event the surface openings or indicators become covered over or obscured, the as-built drawings shall show, by offset dimensions to two permanently fixed surface features, the end of each run including each change in direction. Locate Valves, splice boxes and similar appurtenances by dimensioning along the utility run from a reference point. Record average elevation of the top of each run or underground structure..

1.2.4. Partial Occupancy

For projects where portions of construction are to be occupied or activated before overall project completion, including portions of utility systems, supply as-built drawings for those portions of the facility being occupied or activated at the time the facility is occupied or activated. Show this same as-built information previously furnished on the final set of as-built drawings.

1.2.5. As-Built Conditions That are Different From the construction Drawings

Accurately reflect all as-built conditions that are different, such as dimensions, road alignments and grades, and drainage and elevations, from the construction drawings on each drawing. If the as-built condition is accurately reflected on a shop drawing, then furnish that shop drawing in CADD format. Reference the final as-built construction drawing the shop drawing file that includes the as-built information. In turn, the shop drawing shall reference the applicable construction as-built drawing. Delete any options shown on drawings and not selected clearly reflect options selected on final as-built drawings.

1.2.6. Additional As-Built Information that Exceeds the Detail Shown on the construction Drawings:

These as-built conditions include those that reflect structural details, foundation layouts, equipment, sizes, mechanical and electrical room layouts and other extensions of design, that were not shown in the project design documents because the exact details were not known until after the time of approved shop drawings. It is recognized that these shop drawing submittals (revised showing as-built conditions) will serve as the as-built record without actual incorporation into the construction drawings, piping, and equipment drawings. Include locations of all explorations, logs of all explorations, and results of all laboratory testing, including those provided by the Government. Furnish all such shop drawings in CADD /CADformat. Include fire protection details, such as wiring, performed for the design of the project.

1.2.7. Final As-Built Drawings

Submit final as-built CADD/CAD and BIM Model(s) and Facility Data files at the time of Beneficial Occupancy of the project or at a designated phase of the project. In the event the Contractor accomplishes additional work after this submittal, which changes the as-built conditions, submit a new DVD with all drawing sheets and three blue-line copies of affected sheets which depict additional changes.

1.2.8. Title Blocks

In accordance with the configuration management plan, clearly mark title blocks to indicate final as-built drawings.

1.2.9. Other As-Built Documents

Provide scans of all other documents such as design analysis, catalog cuts, certification documents that are not available in native electronic format in an organized manner in Adobe.pdf format.

1.2.9.1. LEED Documentation

Update LEED documentation on at least a monthly basis and have it available for review by the Government on the jobsite at all times during construction. Submit the final LEED Project Checklist(s), final LEED submittals checklist and complete project documentation, verifying the final LEED score and establishing the final rating. Provide full support to the validation review process, including credit audits. See also the LEED documentation requirements in Section 01 33 16, DESIGN AFTER AWARD.

1.2.9.2. GIS Documentation

Provide final geo-referenced GIS database of the new building footprint along with any changes made to exterior of the building. The intent of capturing the final building footprint and exterior modifications in a GIS database is to provide the installation with a data set of the comprehensive changes made to the landscape as a result of the construction project. The Government will incorporate this data set into the installations existing GIS MasterPlan or Enterprise GIS system. The GIS database deliverable shall follow a standard template provided to the Contractor by the Government, adhere to detailed specifications outlined in ECB No 2006-15, and be documented using the Federal Geographic Data Committee (FGDC) metadata standard.

1.3. EQUIPMENT DATA

1.3.1. Real Property Equipment

Provide an Equipment-in-Place list of all installed equipment furnished under this contract. Include all information usually listed on manufacturer's name plate. Include the cost of each piece of installed property F.O.B. construction site. For each of the items which is specified herein to be guaranteed for a specified period from the date of acceptance thereof, provide the following information: The name, serial and model number address of equipment supplier, or manufacturer originating the guaranteed item. The Contractor's guarantee to the Government of these items will not be limited by the terms of any manufacturer's guarantee to the Contractor. Furnish the list as one (1) reproducible and three (3) copies thirty (30) calendar days before completion of any segment of the contract work which has an incremental completion date.

1.3.2. Maintenance and Parts Data

Furnish a brochure, catalog cut, parts list, manufacturer's data sheet or other publication showing detailed parts data on all other equipment subject to repair and maintenance procedures not otherwise required in Operations and Maintenance Manuals specified elsewhere in this contract. Distribution of directives shall follow the same requirements as listed in paragraph above.

1.3.3. Construction Specifications

Furnish permanent electronic files of final as-built construction specifications, including modifications thereto, with the as-built drawings.

1.4. CONSTRUCTION WARRANTY MANAGEMENT

1.4.1. Prior to the end of the one year warranty, the Government may conduct an infrared roof survey on any project involving a membrane roofing system. This survey will be conducted in accordance with ASTM C1153-90, "Standard Practice for Location of Wet Insulation in Roofing Systems Using Infrared Imaging". The Contractor shall replace all damaged materials and locate and repair sources of moisture penetration.

1.4.2. Management

1.4.2.1. Warranty Management Plan

Develop a warranty management plan containing information relevant to the clause ***Warranty of Construction*** in FAR 52.246-21. Submit the warranty management plan for Government approval at least 30 days before the planned pre-warranty conference. In the event of phased turn-over of the contract, update the Warranty Management Plan as necessary to include latest information required. Include all required actions and documents to assure that the Government receives all warranties to which it is entitled. The plan shall be in narrative form and contain sufficient detail to render it suitable for use by future maintenance and repair personnel, whether tradesmen, or of engineering background, not necessarily familiar with this contract. The term "status" as indicated below shall include due date and whether item has been submitted or was accomplished. Submit warranty information made available during the construction phase prior to each monthly pay estimate. Assemble information in a binder and turn over to the Government upon acceptance of the work. The construction warranty period shall begin on the date of project acceptance and shall continue for the full product warranty period. The Contractor, Government, including the Customer Representative shall jointly conduct warranty inspections, 4 months and 9 months, after acceptance. The warranty management plan shall include, but shall not be limited to, the following information:

(1) Roles and responsibilities of all personnel associated with the warranty process, including points of contact and telephone numbers within the organizations of the contractors, subcontractors, manufacturers or suppliers involved.

(2) Listing and status of delivery of all Certificates of Warranty for extended warranty items, to include roofs, HVAC balancing, pumps, motors, transformers, and for all commissioned systems such as fire protection and alarm systems, sprinkler systems, lightning protection systems, etc.

(3) A list for each warranted equipment, item, feature of construction or system indicating:

(i) Name of item.

(ii) Model and serial numbers.

(iii) Location where installed.

(iv) Name and phone numbers of manufacturers or suppliers.

(v) Names, addresses and telephone numbers of sources of spare parts.

(vi) Warranties and terms of warranty. Include one-year overall warranty of construction. Indicate those items, which have extended warranties with separate warranty expiration dates.

(vii) Cross-reference to warranty certificates as applicable.

(viii) Starting point and duration of warranty period.

(ix) Summary of maintenance procedures required to continue the warranty in force.

(x) Cross-reference to specific pertinent Operation and Maintenance manuals.

(xi) Organization, names and phone numbers of persons to call for warranty service.

(xii) Typical response time and repair time expected for various warranted equipment.

(4) The Contractor's plans for attendance at the 4 and 9 month post-construction warranty inspections conducted by the Government.

(5) Procedure and status of tagging of all equipment covered by extended warranties.

(6) Copies of instructions to be posted near selected pieces of equipment where operation is critical for warranty and/or safety reasons.

1.4.3. Performance Bond

1.4.3.1. The Contractor's Performance Bond will remain effective throughout the construction warranty period.

1.4.3.2. In the event the Contractor or his designated representative(s) fails to commence and diligently pursue any work required under this clause, and in a manner pursuant to the requirements thereof, the Government shall have

a right to demand that said work be performed under the Performance Bond by making written notice on the surety. If the surety fails or refuses to perform the obligation it assumed under the Performance Bond, the Government shall have the work performed by others, and after completion of the work, may make demand for reimbursement of any or all expenses incurred by the Government while performing the work, including, but not limited to administrative expenses.

1.4.3.3. In the event sufficient funds are not available to cover the construction warranty work performed by the Government at the Contractor's expense, the Government will have the right to recoup expenses from the bonding company.

1.4.3.4. Following oral or written notification of required warranty repair work, the Contractor will respond as dictated by para. 1.4.5. Written verification will follow oral instructions. Failure of the Contractor to respond will be cause for the Government to proceed against the Contractor as outlined in the paragraph 1.4.5.5 and/or above.

1.4.4. Pre-Warranty Conference

Prior to contract completion, or completion of any phase or portion of contract to be turned over, and at a time designated by the Contracting Officer, the Contractor shall meet with the Government to develop a mutual understanding with respect to the requirements of this clause. Communication procedures for Contractor notification of warranty defects, priorities with respect to the type of defect, reasonable time required for Contractor response, and other details deemed necessary by the Government for the execution of the construction warranty shall be established/reviewed at this meeting. In connection with these requirements and at the time of the Contractor's quality control completion inspection, the Contractor will furnish the name, telephone number and address of a licensed and bonded company which is authorized to initiate and pursue warranty work action on behalf of the Contractor. This point of contact will be located within the local service area of the warrantied construction, will be continuously available, and will be responsive to Government inquiry on warranty work action and status. This requirement does not relieve the Contractor of any of his responsibilities in connection with other portions of this provision.

1.4.5. Contractor's Response to Warranty Service Requirements.

Following Government oral or written notification, which may include authorized installation maintenance personnel, the Contractor shall respond to warranty service requirements in accordance with the "Warranty Service Priority List" and the three categories of priorities listed below. Submit a report on any warranty item that has been repaired during the warranty period. The report shall include the cause of the problem, date reported, corrective action taken, and when the repair was completed. If the Contractor does not perform the construction warranty within the timeframe specified, the Government will perform the work and backcharge the construction warranty payment item established.

1.4.5.1. First Priority Code 1 Perform onsite inspection to evaluate situation, and determine course of action within 4 hours, initiate work within 6 hours and work continuously to completion or relief.

1.4.5.2. Second Priority Code 2 Perform onsite inspection to evaluate situation, and determine course of action within 8 hours, initiate work within 24 hours and work continuously to completion or relief.

1.4.5.3. Third Priority Code 3 All other work to be initiated within 3 work days and work continuously to completion or relief.

1.4.5.4. The "Warranty Service Priority List" is as follows:

- Code 1 - Air Conditioning System

(a) Buildings with computer equipment.

(b) Barracks, mess halls (entire building down).

- Code 2 - Air Conditioning Systems

(a) Recreational support.

(b) Air conditioning leak in part of building, if causing damage.

(c) Air conditioning system not cooling properly

(d) Admin buildings with Automated Data Processing (ADP) equipment not on priority list.

- Code 1 - Doors

(a) Overhead doors not operational.

- Code 1 - Electrical

(a) Power failure (entire area or any building operational after 1600 hours).

(b) Traffic control devices.

(c) Security lights.

(d) Smoke detectors and fire alarm systems

(e) Power or lighting failure to an area, facility, portion of a facility, which may adversely impact health, safety, security, or the installation's mission requirement, or which may result in damage to property.

- Code 2 - Electrical

(a) Power failure (no power) for unoccupied buildings or portions thereof or branch circuits within occupied buildings, not listed as Code 1.

(a) Receptacle and lights, not listed as code 1.

- Code 3 - Electrical

(a) Street, parking area lights

- Code 1 - Gas

(a) Leaks and breaks.

(b) No gas to cantonment area.

- Code 1 - Heat

(a) Area power failure affecting heat.

(b) Heater in unit not working.

- Code 2 Heat

(a) All heating system failures not listed as Code 1.

- Code 3 - Interior

(a) Floor damage

(b) Paint chipping or peeling

- Code 1 - Intrusion Detection Systems - N/A.
- Code 2 - Intrusion Detection Systems other than those listed under Code 1
- Code 1 - Kitchen Equipment

(a) Dishwasher.

(b) All other equipment hampering preparation of a meal.

- Code 2 - Kitchen Equipment

(a) All other equipment not listed under Code 1.

- Code 2 - Plumbing

(a) Flush valves not operating properly

(b) Fixture drain, supply line commode, or water pipe leaking.

(c) Commode leaking at base.

- Code 3 - Plumbing

(a) Leaking faucets

- Code 1 - Refrigeration

(a) Mess Hall.

(b) Medical storage.

- Code 2 - Refrigeration

(a) Mess hall - other than walk-in refrigerators and freezers.

- Code 1 - Roof Leaks

(a) Temporary repairs will be made where major damage to property is occurring.

- Code 2 - Roof Leaks

(a) Where major damage to property is not occurring, check for location of leak during rain and complete repairs on a Code 2 basis.

- Code 1 - Sprinkler System

(a) All sprinkler systems, valves, manholes, deluge systems, and air systems to sprinklers.

- Code 1 - Tank Wash Racks (Bird Baths)

(a) All systems which prevent tank wash.

- Code 1 - Water (Exterior)

(a) Normal operation of water pump station.

- Code 2 - Water (Exterior)

(a) No water to facility.

- Code 1 - Water, Hot (and Steam)

(a) Barracks (entire building).

- Code 2 - Water, Hot

(a) No hot water in portion of building listed under Code 1

1.4.5.5. Should parts be required to complete the work and the parts are not immediately available, the Contractor shall have a maximum of 12 hours after arrival at the job site to provide the Government, with firm written proposals for emergency alternatives and temporary repairs for Government participation with the Contractor to provide emergency relief until the required parts are available on site for the Contractor to perform permanent warranty repair. The Contractors proposals shall include a firm date and time that the required parts shall be available on site to complete the permanent warranty repair. The Government will evaluate the proposed alternatives and negotiate the alternative considered to be in the best interest of the Government to reduce the impact of the emergency condition. Alternatives considered by the Government will include the alternative for the Contractor to "Do Nothing" while waiting until the required parts are available to perform permanent warranty repair. Negotiating a proposal which will require Government participation and the expenditure of Government funds shall constitute a separate procurement action by the using service.

1.4.6. Equipment Warranty Identification Tags

1.4.6.1. Provide warranty identification tags at the time of installation and prior to substantial completion shall provide warranty identification tags on all Contractor and Government furnished equipment which the Contractor has installed.

(a) The tags shall be suitable for interior and exterior locations, resistant to solvents, abrasion, and to fading caused by sunlight, precipitation, etc. These tags shall have a permanent pressure-sensitive adhesive back, and they shall be installed in a position that is easily (or most easily) noticeable. Tag each component of contractor furnished equipment that has differing warranties on its components.

(b) Submit sample tags, representing how the other tags will look, for Government review and approval.

(c) Tags for Warrantied Equipment: The tag for this equipment shall be similar to the following: Exact format and size will be as approved.

EQUIPMENT WARRANTY - CONTRACTOR FURNISHED EQUIPMENT

MFG NAME MODEL NO.

SERIAL NO.

CONTRACT NO.

CONTRACTOR NAME

CONTRACTOR WARRANTY EXPIRES

MFG WARRANTY(IES) EXPIRE

EQUIPMENT WARRANTY - GOVERNMENT FURNISHED EQUIPMENT

MFG NAME MODEL NO.

SERIAL NO.

CONTRACT NO.

DATE EQUIP PLACED IN SERVICE

MFG WARRANTY(IES) EXPIRE

(d) If the manufacturer's name (MFG), model number and serial number are on the manufacturer's equipment data plate and this data plate is easily found and fully legible, this information need not be duplicated on the equipment warranty tag

1.4.6.2. Execution: Complete the required information on each tag and install these tags on the equipment by the time of and as a condition of final acceptance of the equipment.

1.5. MECHANICAL TESTING, ADJUSTING, BALANCING, AND COMMISSIONING

Submit; all reports, statements, certificates, and completed checklists for testing, adjusting, balancing, and commissioning of mechanical systems prior to final inspection and transfer of the completed facility for approval, as specified in applicable technical specification sections.

1.6. OPERATION AND MAINTENANCE MANUALS

1.6.1. General Requirements

1.6.1.1. Inasmuch as the operations and maintenance manuals are required to operate and maintain the facility, the operations and maintenance (O&M) manuals will be considered a requirement prior to substantial completion of any facility to be turned over to the Government. Beneficial occupancy of all or portions of a facility prior to substantial completion will not relieve the Contractor of liquidated damages, if substantial completion exceeds the required completion date.

1.6.1.2. Provide one permanent electronic copy on CD-ROM and 2 hard copies of the Equipment Operating, Maintenance, and Repair Manuals. Provide separate manuals for each utility system as defined hereinafter. Submit Operations and Maintenance manuals for approval before field training or 90 days before substantial completion (whichever occurs earlier). If there is no separate CLIN for O&M Manuals, the Government will withhold an amount representing $20,000, as non-progressed work, until submittal and approval of all O&M manuals are complete.

1.6.2. Definitions

1.6.2.1. Equipment

A single piece of equipment operating alone or in conjunction with other equipment to accomplish a system function.

1.6.2.2. System

A combination of one or more pieces of equipment which function together to accomplish an intended purpose (i.e. HVAC system is composed of many individual pieces of equipment such as fans, motors, compressors, valves, sensors, relays, etc.)

1.6.3. Hard Cover Binders

The manuals shall be hard cover with posts, or 3-ring binders, so sheets may be easily substituted. Print the following identification on the cover: the words "EQUIPMENT OPERATING, MAINTENANCE, AND REPAIR MANUALS," the project name, building number, and an indication of utility or systems covered, the name of the Contractor, and the Contract number. Manuals shall be approximately 8-1/2 by 11-inches with large sheets folded in and capable of being easily pulled out for reference. All manuals for the project must be similar in appearance, and be of professional quality.

1.6.4. Warning Page

Provide a warning page to warn of potential dangers (if they exist, such as high voltage, toxic chemicals, flammable liquids, explosive materials, carcinogens, high pressures, etc.). Place the warning page inside the front cover and in front of the title page. Include any necessary Material Safety Data Sheets (MDSD) here.

1.6.5. Title Page

The title page shall include the same information shown on the cover and show the name of the preparing firm and the date of publication.

1.6.6. Table of Contents

Each volume of the set of manuals for this project shall include a table of contents, for the entire set, broken down by volume.

1.6.7. GENERAL

Organize manuals according to the following format, and include information for each item of equipment Submit a draft outline and table of contents for approval at 50% contract completion.

TABLE OF CONTENTS

PART I: Introduction

- Equipment Description
- Functional Description
- Installation Description

PART II: Operating Principles

PART III: Safety

PART IV: Preventive Maintenance

- Preventive Maintenance Checklist, Lubrication
- Charts and Diagrams

PART V: Spare Parts Lists

- Troubleshooting Guide
- Adjustments
- Common Repairs and Parts Replacement

PART VI: Illustrations

1.6.7.1. Part I-Introduction

Part I shall provide an introduction, equipment or system description, functional description and theory of operation, and installation instructions for each piece of equipment. Include complete instructions for uncrating, assembly, connection to the power source and pre-operating lubrication in the installation instructions as applicable. Illustrations, including wiring and cabling diagrams, are required as appropriate in this section. Include halftone pictures of the equipment in the introduction and equipment description, as well as system layout drawings with each item of equipment located and marked. Do not use copies of previously submitted shop drawings in these manuals.

1.6.7.2. Part II-Operating Principles

Part II shall provide complete instructions for operating the system, and each piece of equipment. Illustrations, halftone pictures, tables, charts, procedures, and diagrams are required when applicable. This will include step-by-step procedures for start-up and shutdown of both the system and each component piece of equipments, as well as adjustments required to obtain optimum equipment performance, and corrective actions for malfunctions. Show performance sheets and graphs showing capacity data, efficiencies, electrical characteristics, pressure drops, and flow rates here, also. Marked-up catalogs or catalog pages do not satisfy this requirement. Present performance information as concisely as possible with only data pertaining to equipment actually installed. Include actual test data collected for Contractor performance here.

1.6.7.3. Part III-Safety

Part III shall contain the general and specific safety requirements peculiar to each item of equipment. Repeat safety information as notes cautions and warnings in other sections where appropriate to operations described.

1.6.7.4. Part IV-Preventive Maintenance

Part IV shall contain a troubleshooting guide, including detailed instructions for all common adjustments and alignment procedures, including a detailed maintenance schedule. Also include a diagnostic chart showing symptoms and solutions to problems. Include test hookups to determine the cause, special tools and test equipment, and methods for returning the equipment to operating conditions. Information may be in chart form or in tabular format with appropriate headings. Include instructions for the removal, disassembly, repair, reassembly, and replacement of parts and assemblies where applicable and the task is not obvious.

1.6.7.5. Part V-Spare Parts List

Part V shall contain a tabulation of description data and parts location illustrations for all mechanical and electrical parts. The heading of the parts list shall clearly identify the supplier, purchase order number, and equipment. Include the unit price for each part. List parts by major assemblies, and arrange the listing in columnar form. Include names and addresses of the nearest manufacturer's representatives, as well as any special warranty information. Provide a list of spare parts that are recommended to be kept in stock by the Government installation.

1.6.7.6. Part VI-Illustrations

Part VI shall contain assembly drawings for the complete equipment or system and for all major components. Include complete wiring diagrams and schematics. Other illustrations, such as exploded views, block diagrams, and cutaway drawings, are required as appropriate.

1.6.8. Framed Instructions

Post framed instructions are required for substantial completion. Post framed instructions under glass or in laminated plastic, including wiring and control diagrams showing the complete layout of the entire system, including equipment, ductwork, piping valves, dampers, and control sequence at a location near the equipment described. Prepare condensed operating instructions explaining preventive maintenance procedures methods of checking the system for normal safe operation, valve schedule and procedures for safely starting and stopping the system in type form, framed as specified above for the wiring and control diagrams and posted beside the diagrams. Submit proposed diagrams, instructions, and other sheets prior to posting. Post the framed instructions before field training.

1.6.9. (Reserved. See 1.7 for Field Training)

1.6.10. System/Equipment Requirements

1.6.10.1. Facility Heating System

Provide information on the following equipment: boilers, water treatment, chemical feed pumps and tanks, converters, heat exchangers, pumps, unit heaters, fin-tube radiation, air handling units (both heating only and heating and cooling), and valves (associated with heating systems).

1.6.10.2. Air-Conditioning Systems

Provide information in chillers, packaged air-conditioning equipment, towers, water treatment, chemical feed pumps and tanks, air-cooled condensers, pumps, compressors, air handling units, and valves (associated with air-conditioning systems).

1.6.10.3. Temperature Control and HVAC Distribution Systems

Provide all information described for the following equipment: valves, fans, air handling units, pumps, boilers, converters and heat exchangers, chillers, water cooled condensers, cooling towers, and fin-tube radiation, control air compressors, control components (sensors, controllers, adapters and actuators), and flow measuring equipment.

1.6.10.4. Central Heating Plants

Provide the information described for the following equipment: boilers, converters, heat exchangers, pumps, fans, steam traps, pollution control equipment, chemical feed equipment, control systems, fuel handling equipment, de-aerators, tanks (flash, expansion, return waters, etc.), water softeners, and valves.

1.6.10.5. Heating Distribution Systems

Provide the information described for the following equipment: valves, fans, pumps, converters and heat exchangers, steam traps, tanks (expansion, flash, etc.), and piping systems.

1.6.10.6. Exterior Electrical Systems

Provide information on the following equipment: power transformers, relays, reclosers, breakers, and capacitor bank controls.

1.6.10.7. Interior Electrical Systems

Provide information on the following equipment: relays, motor control centers, switchgear, solid state circuit breakers, motor controller, EPS lighting systems, wiring diagrams and troubleshooting flow chart on control systems, and special grounding systems.

1.6.10.8. Energy Monitoring and Control Systems

The maintenance manual shall include descriptions of maintenance for all equipment, including inspection, periodic preventative maintenance, fault diagnosis, and repair or replacement of defective components.

1.6.10.9. Domestic Water Systems

Provide the identified information on the following equipment: tanks, unit process equipment, pumps, motors, control and monitoring instrumentation, laboratory test equipment, chemical feeders, valves, switching gear, and automatic controls.

1.6.10.10. Wastewater Treatment Systems

Provide the identified information on the following equipment: tanks, unit process equipment, pumps, motors, control and monitoring instrumentations, laboratory test equipment chemical feeders, valves, scrapers, skimmers, comminutors, blowers, switching gear, and automatic controls.

1.6.10.11. Fire Protection Systems

Provide information on the following equipment: alarm valves, manual valves, regulators, foam and gas storage tanks, piping materials, sprinkler heads, nozzles, pumps, and pump drivers.

1.6.10.12. Fire Alarm and Detection Systems

(1) The maintenance manual shall include description of maintenance for all equipment, including inspection, periodic preventive maintenance, fault diagnosis, and repair or replacement of defective components.

(2) Provide all software; database with complete identification of programmable portions of system equipment and devices, and all other system programming data on all modes of the system; connecting cables; and proprietary equipment necessary for the operation, maintenance, testing, repair and programming, etc. of the system and that may be required for implementation of future changes to the fire system (additional and/or relocated initiating devices, notification devices, etc.

(3) Provide all system and equipment technical data and computer software with the requisite rights to Government use, in accordance with the applicable contract clauses.

(4) Training shall include software and programming required for the effective operation, maintenance, testing, diagnostics and expansion of the system.

1.6.10.13. Plumbing Systems

Provide information on the following equipment: water heaters, valves, pressure regulators backflow preventors, piping materials, and plumbing fixtures.

1.6.10.14. Liquid Fuels Systems

Provide information on the following equipment: tanks, automatic valves manual valves, filter separators, pumps, mechanical loading arms, nozzles, meters, electronic controls, electrical switch gear, and fluidic controls.

1.6.10.15. Cathodic Protection Systems

Provide information on the following material and equipment: rectifiers, meters, anodes, anode backfill, anode lead wire, insulation material and wire size, automatic controls (if any), rheostats, switches, fuses and circuit breakers, type and size of rectifying elements, type of oil in oil-immersed rectifiers, and rating of shunts.

1.6.10.16. Generator Installations

Provide information on the following equipment: generator sets, automatic transfer panels, governors, exciters, regulators starting systems, switchgear, and protective devices.

1.6.10.17. Miscellaneous Systems

Provide information on the following: communication and ADP systems, security and intrusion alarm, elevators, material handling, active solar, photovoltaic, nurse call, paging, intercom, closed circuit TV, irrigation, sound and material delivery systems, kitchen, refrigeration, disposal, ice making equipment, and other similar type special systems not otherwise specified.

1.6.10.18. Laboratory, Environmental and Pollution Control Systems

Provide information on the following equipment: wet scrubbers, quench chambers, scrub tanks, liquid oil separators, and fume hoods.

1.7. FIELD TRAINING

Field Training is a requirement for substantial completion. Conduct a training course for the operating staff for each particular system. Conduct the training is to be conducted during hours of normal working time after the system is functionally complete. The field instructions shall cover all of the items contained in the Equipment Operating, Maintenance and Repair Manuals. The training will include both classroom and "hands-on" training. Submit a lesson plan outlining the information to be discussed during training periods. Submit this lesson plan for approval 90 days before contract completion before the field training occurs. Record training on DVD and furnish to the Government within ten (10) days following training. Document all training and furnish a list of all attendees.

1.8. PRICING OF CONTRACTOR-FURNISHED AND INSTALLED PROPERTY AND GOVERNMENT-FURNISHED CONTRACTOR-INSTALLED PROPERTY

Promptly furnish and require any sub-contractor or supplier to furnish, in like manner, unit prices and descriptive data required by the Government for Property Record purposes of fixtures and equipment furnished and/or installed by the Contractor or sub-contractor, except prices do not need to be provided for Government-Furnished Property.

1.9. LEED REVIEW MEETINGS

1.9.1. Pre-Closeout Meeting. Approximately 30 days before submittal of LEED closeout documentation, the Contractor and the Government's project delivery team (including Installation representative) will meet to review the documentation, determine which, if any, credits will be audited and identify any corrections/missing items prior to the closeout LEED documentation submittal.

1.9.2. Approximately 14 days after submittal of LEED closeout documentation, the Contractor and the Government's project delivery team (including Installation representative) will meet to review the LEED closeout

documentation. The review conference will include discussion of and resolution of all review comments to ensure consensus on achievement of credits and satisfactory documentation. At the review conference a final score will be determined and endorsed in writing by all parties.

1.10. RED ZONE MEETING

At approximately 80% of contract completion or 60 days before the anticipated Beneficial Occupancy Date (BOD), whichever occurs first, the Contractor and the Government's project delivery team will conduct what is known as the Red Zone Meeting to discuss the close-out process, to schedule the events and review responsibilities for actions necessary to produce a timely physical, as well as fiscal, project close-out. The Red Zone meeting derives its name from the football term used to describe the team effort to move the ball the last 20 yards into the end zone. The close-out of a construction project sometimes can be equally as hard and most definitely requires the whole team's efforts. The ACO will chair the meeting. If not already provided, shortly before the meeting, the Contractor shall provide an electronic copy or access to the CADD as-built drawings, completed commensurate with the amount of work completed at the time of the Red Zone Meeting, as an indicator of the Contractors' understanding of and ability to meet the USACE CADD Standards and to ensure that the Contractor is making progress with CADD As-Built requirements. EXHIBIT 1 is a generic meeting checklist.

1.11. FINAL CLEANING

Clean the premises in accordance with FAR clause 52.236-12 and additional requirements stated here. Remove stains, foreign substances, and temporary labels from surfaces. Vacuum carpet and soft surfaces. Clean equipment and fixtures to a sanitary condition. Clean or replace filters of operating equipment if cleaning isn't possible or practicable. Remove debris from roofs, drainage systems, gutters, and downspouts. Sweep paved areas and rake clean landscaped areas. Remove waste, surplus materials, and rubbish from the site. Remove all temporary structures, barricades, project signs, fences and construction facilities. Submit a list of completed clean-up items on the day of final inspection.

1.12. INTERIM FORM DD1354 "TRANSFER AND ACCEPTANCE OF MILITARY REAL PROPERTY

Near the completion of Project, but a minimum of 60 days prior to final acceptance of the work, complete, update draft provided with the final design package(s) (see Section 01 33 16, paragraph 3.7.5) and submit an accounting of all installed property on Interim Form DD1354 "Transfer and Acceptance of Military Real Property." Include any additional assets/improvements/alterations and cost updates from the Draft DD Form 1354. Contact the COR for any project specific information necessary to complete the DD Form 1354. This form will be a topic for the Red Zone Meeting discussed above. For information purposes, a blank DD Form 1354 (fill-able) in ADOBE (PDF) may be obtained at the following web site: http://www.dtic.mil/whs/directives/infomgt/forms/eforms/dd1354.pdf Submit the completed Checklist for Form DD1354 of Government-Furnished and Contractor-Furnished/Contractor Installed items. Attach this list to the updated DD Form 1354. Instructions for completing the form and a blank checklist (fill-able) in ADOBE (PDF) may be obtained at the following web site:
http://www.wbdg.org/ccb/DOD/UFC/ufc_1_300_08.pdf

EXHIBIT 1

SAMPLE

Red Zone Meeting Checklist

Date:_____

Contract No.	
Description / Location	
Contractor	
Contracting Officer	

Action	Completion Milestone	√
Inspections		
Fire		
Safety		
Pre-final		
Mechanical Test & Balance		
Commissioning		
Landscaping Complete		
Erosion Control		
Beneficial Occupancy Date (BOD)		
Furniture Installation		
Comm Installation		
As-Built Drawings		
Provide all O&M manuals, tools, shop drawings, spare parts, etc. to customer		
Training of O&M Personnel		
Provide Warranty documents to Customer		
Contract completion		

Ribbon cutting		
Payroll Clearances		
DD Form 2626 - Construction Contractor Performance Evaluation		
DD Form 2631 – A-E Performance Rated after Construction		
Status of Pending Mods and REA's/Claims		
Final Payment Completed		
Release of Claims		
Return of Unobligated Funds		
Move Project from CIP to General Ledger		
Financial completion		

End of Section 01 78 02.00 10

APPENDIX A

SUBSURFACE EXPLORATION
AND
GEOTECHNICAL ENGINEERING REPORT
(PRELIMINARY)

SUBSURFACE EXPLORATION
AND
GEOTECHNICAL ENGINEERING REPORT
(PRELIMINARY)

FY 2010 TBUP RENOVATION
Barracks Building 29703
Fort Gordon, Georgia

By
Soils Section
Geotechnical & HTRW Branch
U.S. Army Engineer District, Savannah

June 2010

TABLE OF CONTENTS

SUBJECT	PAGE
1. PURPOSE	1
2. QUALIFICATION OF REPORT	1
3. PROJECT DESCRIPTION	1
4. EXPLORATION PROCEDURES	1
a. Site Reconnaissance	1
b. Field Exploration	2
5. SITE AND SUBSURFACE CONDITIONS	3
a. Site Description	3
b. Area and Site Geology	3
c. Subsurface Soil Conditions	3
d. Groundwater Conditions	4
6. DRAWINGS	4
7. SPECIFICATION	4
8. FINAL GEOTECHNICAL EVALUATION REPORT	4

ATTACHMENT A: Soil Test Boring Location Plan
ATTACHMENT B: Soil Test Boring Logs

SUBSURFACE EXPLORATION AND GEOTECHNICAL ENGINEERING REPORT (PRELIMINARY)

FY 2010 TBUP RENOVATION
Barracks Building 29703
Fort Gordon, Georgia

1. PURPOSE. The Government has conducted a preliminary geotechnical investigation for the proposed project. This subsurface characterization report provides a general overview of the site conditions, including subsurface soil and groundwater conditions, with detailed descriptions provided on the individual soil boring logs.

2. QUALIFICATION OF REPORT. The preliminary field explorations performed for this report were made to characterize the near surface soil and groundwater conditions and were not intended to serve as an assessment of site environmental conditions. No effort was made to define, delineate, or designate any area of environmental concern or of contamination. The contractor's team shall include a licensed geotechnical engineer to interpret the report and develop foundation and earthwork recommendations and design parameters. Additional subsurface investigations and/or laboratory analyses required to determine site soil conditions and develop the final design shall be performed under the direction of a licensed geotechnical engineer and shall be the full responsibility of the contractor. A final geotechnical evaluation report shall be prepared by the licensed geotechnical engineer and submitted along with the first site design submittal.

3. PROJECT DESCRIPTION. The proposed project will provide for the renovation of one building on the Fort Gordon military base. The building is barracks building 29703. The building is an existing three story brick structure currently used as a barracks for housing soldiers. As part of the renovations, balconies will be added to the existing structure.

4. EXPLORATION PROCEDURES.

a. Site Reconnaissance. Prior to the field exploration, a geotechnical engineer visually inspected the proposed project site and surrounding areas. The observations were used in planning the exploration, in determining areas of special interest, and in relating site conditions to known geologic conditions in the area.

b. Field Exploration.

(1) Subsurface conditions at the project site were explored by 4 soil test hand auger borings labeled HA-1 through HA-4. All of the borings were advanced to a depth of between 7.2 and 10.1 feet below the ground surface. The borings were performed at the approximate locations shown on the plan included in Attachment A and on the RFP drawings. The Georgia State Plane coordinates of the boring locations are shown on the individual boring logs.

(2) Boring locations were established in the field by an engineer measuring offsets from the corners of building 29703. The ground surface elevation at each boring location was determined by interpolation from the site topography survey. Since the measurements were not precise, the locations shown on the boring layout plans and the elevations on the drilling logs should be considered approximate.

(3) All borings were advanced by Savannah District personnel using a three inch diameter hand auger. The hand augers were performed in conjunction with dynamic cone penetrometer testing (DCPT). The DCPT was performed at the intervals shown on the boring log. DCPTs were in substantial accordance with ASTM Special Technical Publication 399. The DCPT involves driving a standard 1 ½-inch diameter conical point into the soil using a 15-pound steel ring weight falling 20 inches. The penetrometer is initially seated 2 inches so that the cone is in undisturbed soil. The penetrometer is then driven one or two 1 ¾-inch increments and the number of blows recorded. When properly evaluated, the DCPT values can be empirically correlated with the standard penetration resistance, “N-value”. Penetration resistance, when properly evaluated, is an index of the soil’s strength, density, and foundation support capability. For more information on DCPT, please refer to the article “Dynamic Cone for Shallow In-Situ Penetration Testing”, George F. Sowers and Charles S. Hedges, *Vane Shear and Cone Penetration Resistance Testing of In-situ Soils, ASTM STP 399*, American Society of Testing Materials, 1966.

(4) Representative portions of the soil samples obtained from the borings were sealed in airtight containers and transported to the Savannah District office where they were examined by a geotechnical engineer. Classification of the soil samples was performed in general accordance with ASTM D 2488 (Visual-Manual Procedure for Description of Soils). The soil classifications include the use of the Unified Soil Classification System described in ASTM D 2487 (Classification of Soils for Engineering Purposes). Since the soil descriptions and classifications are based on visual examination, they should be considered approximate. No laboratory tests were performed on any samples collected from the soils investigation.

(5) Logs of the soil borings graphically depicting soil descriptions and dynamic cone penetration resistances are included in Attachment B.

5. SITE AND SUBSURFACE CONDITIONS.

a. Site Description. The project site contains the barracks building 29703. The area adjacent to the building contains grassed areas and sidewalks. There are some shrubs adjacent to the building and a few small trees near the building. The ground surface on the project site generally slopes away from the building at a relatively flat slope.

b. Area and Site Geology.

(1) Fort Gordon is located primarily in Richmond County, Georgia, and lies on the northwestern edge of the Upper Coastal Plains geomorphic province. This broad belt of relatively flat country is underlain by a wedge of Cretaceous-age and younger continental shelf sediments that thicken to the south and southeast. The Piedmont Province, a pre-Cretaceous-age complex of igneous and metamorphic rocks, is adjacent to and northwest of the site. The regional contact between the two provinces is the Fall Line, which has no topographic expression, but is identified lithologically. The Fall Line underlies Augusta, Georgia, and trends southwesterly, passing about 4 miles north of Fort Gordon, and continues through Macon, Georgia, towards Columbus, Georgia.

(2) Two Coastal Plain formations are exposed on Fort Gordon, the Upper Eocene-age Barnwell group and the Upper Cretaceous to Lower Tertiary-age Oconee group. The Barnwell group, which occurs at the higher elevations, consists primarily of interbedded, coarse to fine sands and clays. The thickness of the Barnwell group is a maximum at the southern part of the reservation, thinning to almost nothing at the northern boundary. Underlying the Barnwell group, the Oconee group, which is exposed in the valleys, consists of sands and gravels with interbedded clays, including massive white kaolin beds. The Oconee group thickens considerably to the southeast of the reservation.

c. Subsurface Soil Conditions.

(1) Field classifications indicate sandy materials are the predominant soil identified at the project site. These consisted mostly of silty sands (SM) and poorly graded sands (SP). Although some lean clays were found throughout HA-2. The thickness of the various soil layers varied but the content of the layers was generally uniform with Silty Sand (SM) layers from the ground surface to depths ranging from to 1 to 4.2 feet. Below the layer of SM is a layer of SP which lasted until the bottom of hole for all borings. Dynamic cone penetration resistances within these soils ranged from 8 to 30+. These resistances indicate that the sands exist in conditions ranging from loose to medium density. Construction debris including gravel, wood, concrete, and bricks will likely be encountered in excavations around the buildings as some debris were found at about 6 feet in HA-2.

(2) Soil borings from previous soils investigations for similar renovation projects at buildings adjacent to this project revealed very loose soils at a depth of the existing buildings footings. It is likely that this very loose material is improperly placed backfill from the construction of the barracks basement. It is possible that similar conditions could exist in areas adjacent to the five buildings for this project.

(3) The above subsurface description is of a generalized nature to highlight the major subsurface stratification features and material characteristics. The boring logs should be reviewed for specific information at individual boring locations. The stratifications shown on the boring logs represent the conditions only at the actual boring locations. Variations may occur and should be expected between boring locations. The stratification lines shown on the boring logs represent approximate boundaries between the subsurface materials; the actual transitions are typically more gradual.

d. Groundwater Conditions.

(1) Groundwater was not encountered during drilling in any of the hand auger borings. The boreholes were backfilled immediately after drilling; therefore, long-term, stabilized water levels were not obtained.

(2) Absence of groundwater data implies that no data is available but does not necessarily mean that the groundwater will not be encountered at the locations of those explorations. Groundwater levels will fluctuate with seasonal and climatic variations, variations in subsurface soil conditions, and construction operations. Therefore, groundwater conditions in the future, and at other locations on the site, may differ from the conditions encountered at the exploration locations, on the dates the borings were performed.

(3) Water should not be allowed to collect near the foundation or on floor slab areas of the building either during or after construction. Undercut or excavated areas should be sloped toward one corner to facilitate removal of any collected rainwater, groundwater or surface runoff. Positive site drainage should be provided to reduce infiltration of surface water around the perimeter of the building and beneath floor slabs.

6. DRAWINGS. The drawing showing the soil boring locations completed by the government is included in this RFP. These locations and the locations of any additional investigations (SPT borings, test pits, cone penetrometer tests, laboratory soils test data, etc.) performed by the AE's consulting geotechnical engineer shall be shown on the final design and on the project as-built drawings completed by the design build contractor. In addition, the selected design-build contractor shall show all boring logs, CPT soundings, and soil laboratory test data used for design on the final design drawings and on the as-built drawings.

7. SPECIFICATIONS. It is recommended that the AE use the Savannah District's EARTHWORK specification, 31 00 00, when editing the specifications for this project. The specification (SpecsIntact format) can be found at the following website, http://en.sas.usace.army.mil, under menus "Design Criteria" and "Guide Specs".

8. FINAL GEOTECHNICAL EVALUATION REPORT. A final geotechnical evaluation report shall be prepared by the contractor's licensed geotechnical engineer and submitted along with the first foundation design submittal. The geotechnical report shall summarize the subsurface conditions and provide recommendations for the design of appropriate foundations,

floor slabs, retaining walls, embankments, roadways, and pavements. The report shall recommend the type of foundation system to be used, lateral load resistance capacities for foundation systems, and allowable bearing elevations for footings, grade beams, slabs, etc. An assessment of post-construction settlement potential including total and differential shall be provided. Recommendations regarding lateral earth pressures (active, at-rest, and passive) to be used in the design of retaining walls shall be provided. The report shall include the recommended spectral accelerations and Site Class for seismic design along with an evaluation of any seismic hazards and recommendations for mitigation, if required. Calculations shall be included to support the recommendations for bearing capacity, settlement, and pavement sections. Supporting documentation shall be included for all recommended design parameters such as Site Class, shear strength, earth pressure coefficients, friction factors, subgrade modulus, California Bearing Ratio (CBR), etc. In addition, the report shall provide earthwork recommendations, expected frost penetration, expected groundwater levels, recommendations for dewatering and groundwater control, and identify the possible presence of any surface or subsurface features that may affect the construction of the project such as sinkholes, boulders, shallow rock, undocumented fill, old structures, soft areas, or unusual soil conditions.

ATTACHMENT A

Soil Test Boring Location Plan

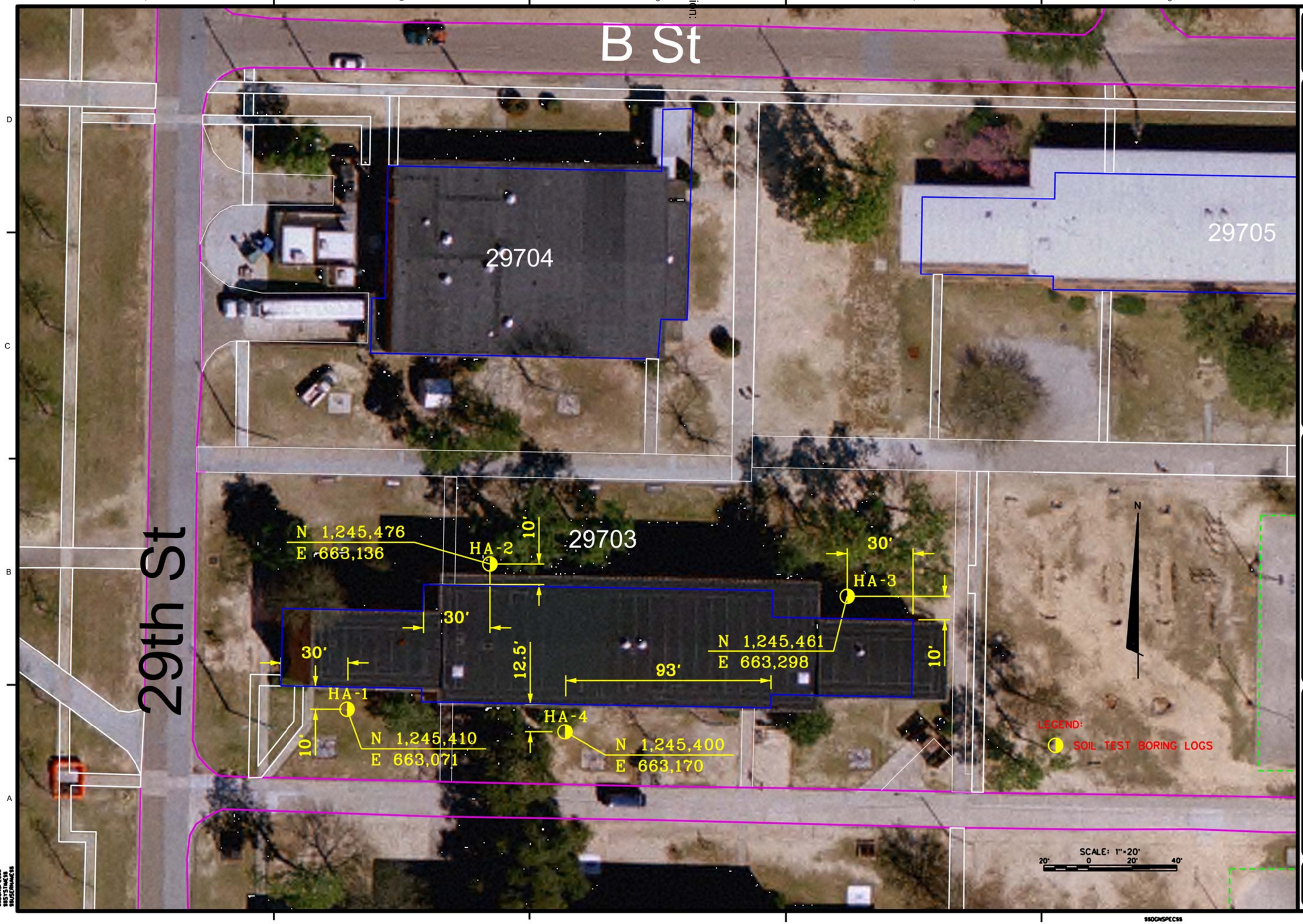

US ARMY CORPS OF ENGINEERS SAVANNAH

DATE	DESCRIPTION	DRAWN	BY

DESIGNED BY: DATE: JULY 2009
DWN BY: CKD BY: SOLICITATION NO.: W912HN-07-X-0710
SUBMITTED BY: CONTRACT NO.:
FILE NAME: CATEGORY CODE: 112400
SIZE: PLOT SCALE: PLOT DATE:

U.S. ARMY ENGINEER DISTRICT
CORPS OF ENGINEERS
SAVANNAH DISTRICT

FY 2010 TBUP RENOVATION
FORT GORDON, GEORGIA

SOIL TEST BORING LOCATION PLAN

PLATE REFERENCE NUMBER
B-101
SHEET

$$OCNSPECS$$
$$SYSTIMES$$
$$USERNAMES$$

ATTACHMENT B

Soil Test Boring Logs

DRILLING LOG

DIVISION	SAD
INSTALLATION	Fort Gordon, Georgia
SHEET	1 OF 1 SHEETS
1. PROJECT	TBUP Barracks Building 29703 FY-11 L.I.70695
9. COORDINATE SYSTEM	GA East State Plane
HORIZONTAL	NAD83
VERTICAL	NAVD88
10. SIZE AND TYPE OF BIT	3" Hand Auger
2. HOLE NUMBER	HA-1
LOCATION COORDINATES	N 1245476 E 663136
11. MANUFACTURER'S DESIGNATION OF DRILL	
3. DRILLING AGENCY	U.S. Corps of Engineers - Savannah District
12. TOTAL SAMPLES	DISTURBED 0 / UNDISTURBED 0
4. NAME OF DRILLER	Rashidi and Bides
13. TOTAL NUMBER CORE BOXES	
5. DIRECTION OF BORING	☒ VERTICAL ☐ INCLINED
DEG FROM VERTICAL	---
BEARING	
14. ELEVATION GROUND WATER	See Remarks
15. DATE BORING	STARTED / COMPLETED 6/17/10
6. THICKNESS OF OVERBURDEN	>
16. ELEVATION TOP OF BORING	472' (Estimated from plans)
7. DEPTH DRILLED INTO ROCK	
17. TOTAL CORE RECOVERY FOR BORING	N/A
8. TOTAL DEPTH OF BORING	7.2'
18. SIGNATURE AND TITLE OF INSPECTOR	Civil Engineer

ELEV	DEPTH	LEGEND	FIELD CLASSIFICATION OF MATERIALS (Description)	% REC	Samp No.	RQD %	REMARKS	Blows/ 0.5 ft	N-Value
			Silty Sand (SM), dry - slightly moist, dark grayish to light black.				USCS		
			Light tan.						
469.8	2.2								
			Poorly Graded Sand (SP), light tan, fine to medium, dry - slightly moist. Likely man-made fill.						
							DCPT @ 3.2': 7-10-11		
							DCPT @ 5.8': 6-7-10		
464.8	7.2						DCPT @ 7.2': 7-11-10		

BOTTOM OF BOREHOLE AT 7.2 ft

No ground water encountered during drilling.
No 24 hr reading taken.

DRILLING LOG

DIVISION	SAD
INSTALLATION	Fort Gordon, Georgia
SHEET	1 OF 1 SHEETS
1. PROJECT	TBUP Barracks Building 29703 FY-11 L.I.70695
9. COORDINATE SYSTEM	GA East State Plane
HORIZONTAL	NAD83
VERTICAL	NAVD88
10. SIZE AND TYPE OF BIT	3" Hand Auger
2. HOLE NUMBER	HA-2
LOCATION COORDINATES	N 1245410 E 663071
11. MANUFACTURER'S DESIGNATION OF DRILL	
3. DRILLING AGENCY	U.S. Corps of Engineers - Savannah District
12. TOTAL SAMPLES	DISTURBED 3 / UNDISTURBED 0
4. NAME OF DRILLER	Rashidi and Bides
13. TOTAL NUMBER CORE BOXES	
5. DIRECTION OF BORING	☒ VERTICAL ☐ INCLINED
DEG FROM VERTICAL	---
BEARING	
14. ELEVATION GROUND WATER	See Remarks
15. DATE BORING	STARTED / COMPLETED 6/17/10
6. THICKNESS OF OVERBURDEN	>
16. ELEVATION TOP OF BORING	472' (Estimated from plans)
7. DEPTH DRILLED INTO ROCK	
17. TOTAL CORE RECOVERY FOR BORING	N/A
8. TOTAL DEPTH OF BORING	7.2'
18. SIGNATURE AND TITLE OF INSPECTOR	Civil Engineer

ELEV	DEPTH	LEGEND	FIELD CLASSIFICATION OF MATERIALS (Description)	% REC	Samp No.	RQD %	REMARKS	Blows/ 0.5 ft	N-Value
			Silty Sand (SM), dry-slightly moist, dark grayish-light black.				USCS		
471.0	1.0		Light tan with some light orange mottled with white lean clay.	100	1				
			Clay is no longer encountered.						
			Poorly Graded Sand (SP), light tan, slightly moist, medioum to coarse, likely man-made fill.						
			Trace lean clay.	100	2				
							DCPT @ 3': 6-7-7		
			More clay through-out, red mottled with white. Trace fine gravel.	100	3				
							DCPT @ 5': 7-8-9		
			Small bits of brick and still encountering some clay.						
464.8	7.2						DCPT @ 7.2': 6-7-6		

BOTTOM OF BOREHOLE AT 7.2 ft

No ground water encountered during drilling.
No 24 hr reading taken.

DRILLING LOG

DIVISION	SAD
INSTALLATION	Fort Gordon, Georgia
SHEET	1 OF 1 SHEETS
1. PROJECT	TBUP Barracks Building 29703 FY-11 L.I.70695
9. COORDINATE SYSTEM	GA East State Plane
HORIZONTAL	NAD83
VERTICAL	NAVD88
10. SIZE AND TYPE OF BIT	3" Hand Auger
2. HOLE NUMBER	HA-3
LOCATION COORDINATES	N 1245461 E 663298
11. MANUFACTURER'S DESIGNATION OF DRILL	
3. DRILLING AGENCY	U.S. Corps of Engineers - Savannah District
12. TOTAL SAMPLES	DISTURBED 2 / UNDISTURBED 0
4. NAME OF DRILLER	Rashidi and Bides
13. TOTAL NUMBER CORE BOXES	
5. DIRECTION OF BORING	☒ VERTICAL ☐ INCLINED
DEG FROM VERTICAL	---
BEARING	
14. ELEVATION GROUND WATER	See Remarks
15. DATE BORING	STARTED / COMPLETED 6/16/10
6. THICKNESS OF OVERBURDEN	>
16. ELEVATION TOP OF BORING	472' (Estimated from plans)
7. DEPTH DRILLED INTO ROCK	
17. TOTAL CORE RECOVERY FOR BORING	N/A
8. TOTAL DEPTH OF BORING	7.5'
18. SIGNATURE AND TITLE OF INSPECTOR	Civil Engineer

ELEV	DEPTH	LEGEND	FIELD CLASSIFICATION OF MATERIALS (Description)	% REC	Samp No.	RQD %	REMARKS	Blows/ 0.5 ft	N-Value
470.0	2.0		Silty Sand (SM), dark tan, dry-slightly moist, roots @ 0.3', trace gravel with max diameter of 2".				USCS		
			Poorly Graded Sand (SP), orange, slightly moist, fine.	100	1				
			Dark tannish orange, slightly moist, fine.	100	2				
							DCPT @ 3.6': 26-30 with 1" left		
							DCPT @ 6': 8-11-11		
464.5	7.5						DCPT @ 7.5': 6-8-6		

BOTTOM OF BOREHOLE AT 7.5 ft

No ground water encountered during drilling.
No 24 hr reading taken.

DRILLING LOG

DIVISION	SAD
INSTALLATION	Fort Gordon, Georgia
SHEET	1 OF 1 SHEETS
1. PROJECT	TBUP Barracks Building 29703 FY-11 L.I.70695
9. COORDINATE SYSTEM	GA East State Plane
HORIZONTAL	NAD83
VERTICAL	NAVD88
10. SIZE AND TYPE OF BIT	3" Hand Auger
2. HOLE NUMBER	HA-4
LOCATION COORDINATES	N 1245400 E 663170
11. MANUFACTURER'S DESIGNATION OF DRILL	
3. DRILLING AGENCY	U.S. Corps of Engineers - Savannah District
12. TOTAL SAMPLES	DISTURBED 2 / UNDISTURBED 0
4. NAME OF DRILLER	Rashidi and Bides
13. TOTAL NUMBER CORE BOXES	
5. DIRECTION OF BORING	☒ VERTICAL ☐ INCLINED
DEG FROM VERTICAL	---
BEARING	
14. ELEVATION GROUND WATER	See Remarks
15. DATE BORING	STARTED / COMPLETED 6/16/10
6. THICKNESS OF OVERBURDEN	>
16. ELEVATION TOP OF BORING	472' (Estimated from plans)
7. DEPTH DRILLED INTO ROCK	
17. TOTAL CORE RECOVERY FOR BORING	N/A
8. TOTAL DEPTH OF BORING	10.1'
18. SIGNATURE AND TITLE OF INSPECTOR	Civil Engineer

ELEV	DEPTH	LEGEND	FIELD CLASSIFICATION OF MATERIALS (Description)	% REC	Samp No.	RQD %	REMARKS	Blows/ 0.5 ft	N-Value
			Silty Sand (SM), dark tannish-brown, moist.				USCS		
							DCPT @ 3.4': 5-5-3		
468.0	4.0			100	1				
			Poorly Graded Sand (SP), dark tannish-orange, slightly moist, fine to medium.						
			Very easy augering, light tan.	100	2				
							DCPT @ 5.7': 6-8-8		
							DCPT @ 6.7': 6-8-9		
			Dark tan.						
			Light tan.						
461.9	10.1						DCPT @ 10.1': 19-17-16		

BOTTOM OF BOREHOLE AT 10.1 ft

No ground water encountered during drilling.
No 24 hr reading taken.

APPENDIX B

LIST OF DRAWINGS

Drawings included in Appendix J (under separate cover):

J-1 Typical Barracks As-Built Drawings

J-2 Suggested Barracks Layout

*2 J-3 ~~Lawn Maintenance/Storage Building Layout~~Deleted

J-4 Site Drawings:

G-101	Cover Sheet and Index of Drawings
GI101	Location Plan
H-101	Building 29703 Asbestos Sampling Plan
VF-101	Installation Map Storm Water
VF-102	Installation Map Water
VF-103	Installation Map Sanitary Sewer
VF-104	Installation Electrical
VF-105	Installation Map Communications
VF-106	Installation Map Natural Gas
CD101	Pavement-Sidewalk Demolition Plan
CS101	Site Plan

APPENDIX C

UTILITY CONNECTION INFORMATION

UTILITY CONNECTIONS
FORT GORDON, GEORGIA

09 June 2010

A. SITE ELECTRICAL GENERAL REQUIREMENTS

1. Site coordination meetings shall be held at the start of design and when necessary thereafter. Meetings shall include all applicable parties including the installation Directorate of Public Works (DPW), Network Enterprise Center (NEC), the privatized electric utility company, the local cable television (CATV) company, the Design-Build Contractor and the Contracting Officer's Representative (COR). All design, demolition and construction work including schedules, capacities, equipment selection, equipment locations, utility routing, connection points and final connection responsibilities shall be addressed.

2. All coordination including exchanges of information between the Design-Build Contractor and the installation DPW, NEC, the privatized electric utility company, the local CATV company information and other utility entities shall be routed through the COR unless otherwise directed.

B. ELECTRICAL PRIMARY DISTRIBUTION

1. The existing primary power distribution system at Fort Gordon is a three-phase, four-wire, grounded wye system. The primary distribution system is owned and maintained by a privatized electric utility company, Georgia Power Company. The point of contact for site power is Mark Mills at (706) 667-5633

2. The Contractor is responsible for all site electrical work required to serve the renovated building, including replacement of the utility transformer. The Contractor is also responsible for the relocation and/or replacement of all existing electrical lines that interfere with the renovation.

3. The Contractor shall procure the services of Georgia Power Company to design, furnish and install all site power systems and to replace and/or relocate site power and lighting lines as necessary. No work shall be done by Georgia Power Company outside this contract.

4. New electrical lines shall be underground and all work shall comply with the specifications of Georgia Power Company and IEEE C2 National Electrical Safety Code.

5. Outages on the existing systems shall be scheduled for off peak times (nights and weekends) and shall be approved by DPW. A minimum of 2 weeks advance notification of outage shall be given. Full preparation shall be done before the outage to minimize the downtime duration.

C. ELECTRICAL SECONDARY DISTRIBUTION

The Contractor shall be responsible for secondary service ductlines, conductors and metering. Secondary service ductlines shall be direct-burial, thick wall type except concrete encasement shall be provided in areas subject to vehicular traffic. Transitions from below-grade to above-grade shall be galvanized rigid steel. Fittings for steel conduit shall be steel threaded or compression type. Secondary service ductlines shall include one spare duct sized to match the filled ducts.

D. SITE LIGHTING

1. Site lighting, defined as all exterior lighting outside of the building 5 foot line, is owned and maintained by the privatized electric utility company, Georgia Power Company. The point of contact for site power is Ken Bodner at (706) 650–5165.

2. The Contractor is also responsible for the relocation and/or replacement of all existing electrical lines that interfere with the renovation. No new site lighting shall be provided as part of this contract.

E. EXTERIOR COMMUNICATIONS

1. The Contractor is responsible for all site communication work required to serve the renovated building. The Contractor is also responsible for the relocation and/or replacement of all existing communication lines that interfere with the renovation.

2. The telecommunications design shall be coordinated with and approved by the Network Enterprise Center (NEC) Quality Assurance Officer prior to construction. The NEC point of contact is Randy Williams at (706) 791-3333. An alternate point of contact is Ernest Walker at (706) 791-8963.

3. The Contractor shall design and install the complete outside plant (OSP) telecommunications infrastructure in accordance with the Technical Criteria for Installation Information Infrastructure Architecture (I3A).

4. A minimum of 4 weeks advance notification shall be provided by the Contractor prior to demolition of any communication lines or equipment. Notice shall be provided to NEC through the COR.

F. CABLE TELEVISION (CATV)

The local privatized cable television (CATV) company at Fort Gordon shall provide and install service cabling throughout the project site, terminating in the main communications room of each building. The Contractor shall coordinate site work and site/facility interfaces with the privatized CATV company.

APPENDIX D

WATER FLOW TEST RESULTS

WATER FLOW TEST SUMMARY SHEET

Flow hydrant on 6" water line along 29th Street. Flow Hydrant #9062 Static Residual Hydrant #9061

	FLOW		PRESSURE		HOSE DEMAND	
	(GPM)	(LPM)	(PSI)	(BARS)	(GPM)	(LPM)
STATIC	0	0	65	4.4785	500	1895
RESIDUAL	1237	4688.23	60	4.134		

FLOW		PRESSURE		FLOW HOSE DEMAND		PRESSURE	
(GPM)	(LPM)	(PSI)	(BARS)	(GPM)	(LPM)	(PSI)	(BARS)
0	0	65	4.5	-500	-1895	65	4.5
1237	4688	60	4.1	737	2793	60	4.1
1749	6630	55	3.8	1249	4735	55	3.8
2143	8120	50	3.4	1643	6225	50	3.4
2474	9376	45	3.1	1974	7481	45	3.1
2766	10483	40	2.8	2266	8588	40	2.8
3030	11484	35	2.4	2530	9589	35	2.4
3273	12404	30	2.1	2773	10509	30	2.1
3499	13260	25	1.7	2999	11365	25	1.7
3711	14065	20	1.4	3211	12170	20	1.4
3912	14825	15	1.0	3412	12930	15	1.0
4103	15549	10	0.7	3603	13654	10	0.7
4285	16241	5	0.3	3785	14346	5	0.3
4460	16904	0	0.0	3960	15009	0	0.0
4460	16904	0	0.0	3960	15009	0	0.0
4460	16904	0	0.0	3960	15009	0	0.0
4460	16904	0	0.0	3960	15009	0	0.0
4460	16904	0	0.0	3960	15009	0	0.0
4460	16904	0	0.0	3960	15009	0	0.0
4460	16904	0	0.0	3960	15009	0	0.0
4460	16904	0	0.0	3960	15009	0	0.0

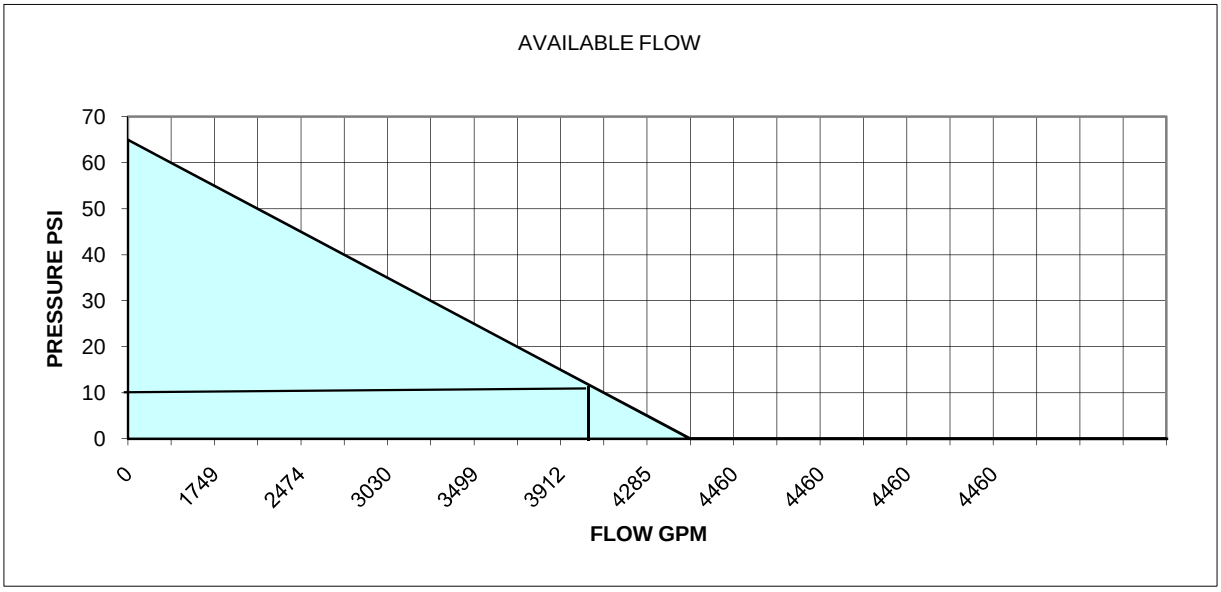

APPENDIX E
Environmental Information

Not Used

APPENDIX F

PHOTOGRAPHS OF EXISTING CONDITIONS AND SURROUNDING AREA

A Building 29703: Front view, west end

B Building 29703: Front view, center

C Building 29703: Front view, east end

D Building 29703: Front view, center

E Building 29703: Back view, east end

F Building 29703: Back view

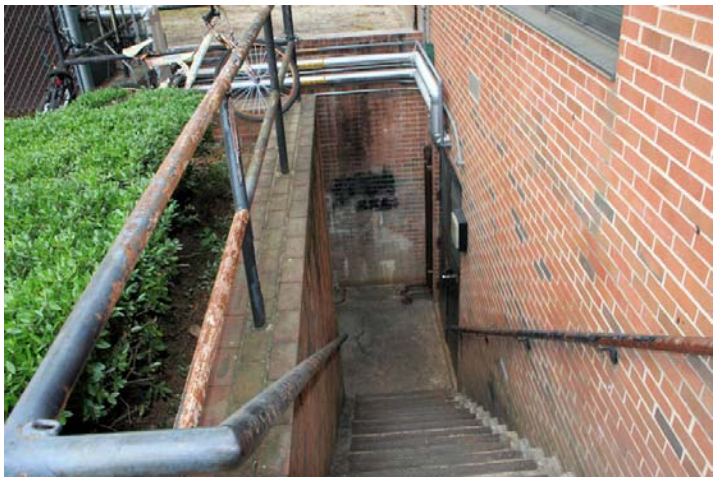

G Building 29703: Backside, stairs to basement

H Bldg 29703: Backside, gas hot water boiler

I Field adjacent (east) to Building 29703

J Dining Facility adjacent (north) to Building 29703

K Dining Facility adjacent (north) to Building 29703

L FY2009 TBUP Renovation in progress

APPENDIX G
GIS Data

Not Used

APPENDIX H

SIGNAGE

(Extract from IDG)

Fort Gordon

11.4.5 Types of Signs.

11.4.5.1 Information / Identification Signs.

These are signs that identify entrances to the installation, areas within the installation, major tenants, buildings, and organizational or functional components. They identify a location, and greet the visitor to that location. They should be compatible in scale and character with the architecture and also blend with the natural surroundings (Fig. 11.41). Building Identification Signs will use street addresses.

Fig. 11.41 – Typical Class III Fort Gordon Bldg. identification Sign with street address

These signs are designed to include the following:

11.4.5.1.1 Typeface: Lettering is self-adhesive backing material.

- Building Title: Helvetica Medium, Upper and lower case
- Building Numbers: Helvetica regular
- Building Addresses: Helvetica Medium, Upper and lower case

ABCDEFGHIJKLMN
OPQRSTUVWXYZ

Use Helvetica Type Style Font on all Signage Unless an Approved Alternative is Noted

11.4.5.1.2 Color:

- Panel: Dark Brown
- Lettering: White
- Post: Dark Brown
- Exposed panel backs and edges: Dark Brown
- All paint: Semi gloss

11.4.5.1.3 Materials:

- Panel: Double-face 1/8” thick aluminum Dimensions: 36” x 24”
- Post: 4” x 4” Cedar
- Foundation: Concrete pier or direct burial

11.4.5.2 Building Identification.

11.4.5.2.1 Street Addresses. The addressing procedures prescribed in DoD 4525.8-M, DoD Official Mail Manual are mandatory for use by all DoD components. DoD 4525.8-M, Chapter 3 prescribes the following:

All DoD addresses shall be assigned so they are compatible with the United States Postal Services automated delivery point sequencing (C3.3).

The DoD installation is responsible for assigning city-style, street address on the installation (C3.3.2.2).

Street addresses shall be assigned and used even though a DoD activity may deliver the mail to the addressee (C3.3.2.2.1).

Only geographically locatable civilian-style street address (such as 4102 Cindy Avenue, Fig. 11.42) shall be used (C3.3.2.2.4).

Installations shall not use one street address for the entire installation and then use secondary unit designators such as "Building 123" to designate the delivery addresses on the installation (C3.3.2.2.5).

Addresses such as "Building 123 Roberts Street" are not a valid address format and shall not be used (C3.3.2.2.6).

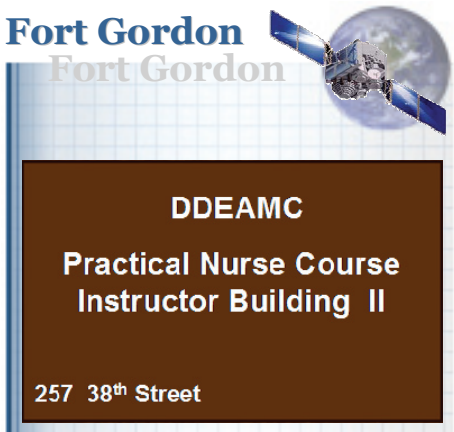

Fig. 11.42 – Use of Street Addresses On All Building Identification Sign

11.4.5.3 Brigade, Battalion and Company Headquarters Signs.

TM 5-807-10 must be followed for any specifics not covered here.

Notes:

- All figures and paragraphs referenced in the following can be found in TM 5-807-10.
- Building numbers as described in TM 5-807-10 **will not** be placed on building identification signs
- Building addresses will be placed on all building identification signs where the building numbers were once placed.

Military headquarters identification signs consist of four types:

- Sign type B1, installation headquarters sign, identifies the central administration of the installation.
- Sign type B2, command, division and brigade headquarters sign.
- Sign type B3, battalion headquarters sign.
- Sign type B4, headquarters building entrance sign, identifies the building entrance for all levels of authority. In addition, type B4 is used to identify a unit headquarters that has a special entry point other than the main entrance of a building.

Graphics appear on both sides of these signs, since they are placed perpendicular to the road and can be viewed by traffic moving in both directions.

11.4.5.3.1 Headquarters Facilities.

Sign **Type B1** signs are used to identify the headquarters facilities of each installation. When the headquarters of a command or division level organization is located in the same facility as the installation headquarters, the unit name is placed below the installation name. In addition, the authorized insignia of the command or division level unit is located to the left of the unit name.

(1) Colors. White letters and numbers on standard brown background; full-color insignia.

(2) Sign grid specifications.

(a) Dimensions. 3ft-6in. H x 8ft-0in. W.

(b) Message. Installation name - upper and lower case Helvetica medium, 6-inch capital letter height, centered in top grid. Average line length-21 characters per line. “Headquarters” - upper and lower case Helvetica bold, 6-inch capital letter height, centered below Installation name. Average line length - 24 characters per line. Command or division level name - upper and lower case Helvetica medium, 4-inch capital letter height, centered below “Headquarters”. Average line length - 27 characters per line.

(c) Building address. Upper and lower case Helvetica

medium, 4-inch capital letter height, flush left.

(d) Insignia. Authorized military insignia, 12-inch maximum height x 9-inch maximum width, flush left and centered.

11.4.5.3.2 Brigade Headquarters.

Sign Type B2 signs are used to identify the headquarters facilities of command, division and brigade level organizations. The authorized shoulder sleeve insignia or distinctive unit insignia for each command or division is located in the bottom right grid of the sign. Brigade level organizations show the name of the command or division under which each serves below the unit name, and display the command or division insignia to the left of the unit name. Only one headquarter unit is identified per sign. (Fig. 11.43)

Fig. 11.43 – Example Brigade Headquarters Sign

Names or titles of individuals shall not be displayed on Brigade level organization signs

(1) Colors. White letters and numbers on standard brown background; full-color insignia (Fig. 11.43).

(2) Sign grid specifications.

(a) Dimensions. 3ft-6in. H x 5ft-0in. W.

(b) Message. "HEADQUARTERS" - upper case Helvetica bold, 4-inch letter height, top centered. Average line length -25 characters per line. Unit name-upper and lower case Helvetica bold, 4-inch capital letter height, centered below "HEADQUARTERS". Average line length-17 characters per line.

(c) Building address. Upper and lower case Helvetica medium, 3-inch capital letter height, flush left bottom.

(d) Insignia. Authorized military insignia, 12-inch maximum height x 9-inch maximum width, flush right bottom. (Fig. 11.43)

11.4.5.3.3 Battalion Headquarters.

Sign Type B3 signs are used to identify the headquarters facilities of battalion level organizations. The name of the command or division under which each serves is shown below the unit name.

The authorized branch color(s) of the unit is located flush left center of the sign. Battalion headquarters signs shall display the command or division level organizational insignia in the lower right corner. If more than one (1) battalion headquarters is located in a specific building all unit names will be displayed on one (1) sign. (Fig. 11.44)

Names or titles of individuals shall not be displayed on Battalion level unit signs

(1) Colors. White letters and numbers on standard brown background; full-color symbol (Fig. 11.44).

(2) Sign grid specifications.

(a) Dimensions. 3ft-0in. H x 4ft-0in. W.

(b) Message. "HEADQUARTERS" - upper case Helvetica bold, 4-inch letter height, top centered. Average line length - 22 characters per line. Unit name-upper and lower case Helvetica bold, 4-inch capital letter height, centered below "HEADQUARTERS". Average line length -20 characters per line.

(c) Symbol. 7 - inch square overall "white" field with 1-inch border in secondary branch color. Battalion insignia / symbol centered within "white" field, flush left centered. (Fig. 11.44)

(d) Building address. Upper and lower case Helvetica medium, 3 - inch capital letter height, flush left.

11.4.5.3.4 Company Headquarters.

Most company operations facilities contain more than one company headquarters unit. When more than one company Headquarters unit is located in a specific building all units will be listed on an individual sign. Sign specifications are as follows:

- **Facilities with one (1) company headquarters unit:**

Type C4 signs. Insignias, branch colors, unit mottos, names or titles of individuals are not to be displayed on company level unit signs. The name of the command or division under which each serves is shown below the unit name.

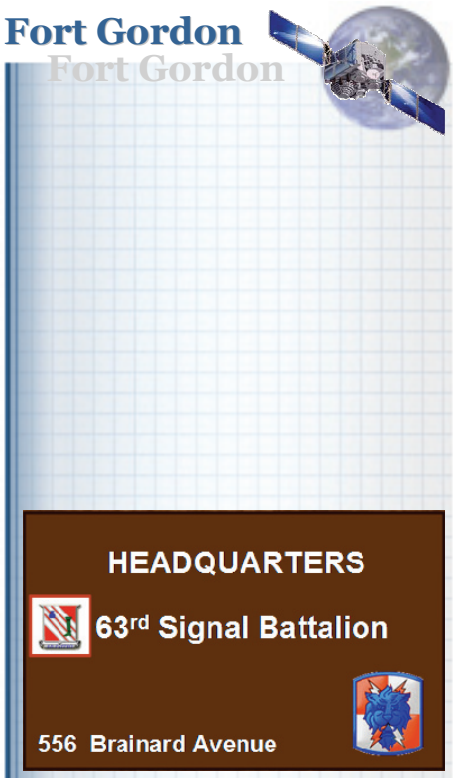

Fig. 11.44 – Example Battalion Headquarters Sign

(1) Colors. White letters and numbers on standard brown background.

(2) Sign grid specifications.

(a) Dimensions. 3ft-0in. H x 4ft-0in. W.
(b) Message. Facility and unit name-upper and lower case Helvetica medium, 3-inch capital letter height, flush left. Average line length-25 characters per line.

(c) Building address. Upper and lower case Helvetica medium, 3-inch capital letter height, flush left.

- **Facilities with more than one (1) company headquarters unit:**

Type C2 signs. Sign Type C2 will be used with the extended grid specifications listed below. The name of the command or division under which each serves is shown below the unit name. Insignias, branch colors, unit mottos, names or titles of individuals are not to be displayed on company level unit signs (Fig. 11.45).

(1) Colors. White letters and numbers on standard brown background.

(2) Sign grid specifications.

(a) Dimensions. 3ft-0in. H x 4ft-0in. W.

(b) Message. Unit facility and name - upper and lower case Helvetica medium 4-inch capital letter height, flush left. Average line length-19 characters per line. Sub-service name-upper and lower case Helvetica regular, 3-inch capital letter height, flush left. Average line length-30 characters per line. (Fig. 11.45)

(c) Building address. Helvetica regular, 4-inch number height, flush left.

(3) Extended sign grid specifications.
(a) Dimensions. 4ft-0in. H x 5ft-0in. W.

(b) Message. Military unit name-upper and lower case Helvetica medium, 4-inch capital letter height, flush left. Average line length - 19 characters per line. Sub-unit name-upper and lower case Helvetica regular, 3-inch capital letter height, flush left. Average line length-30 characters per line. (Fig. 11.45)

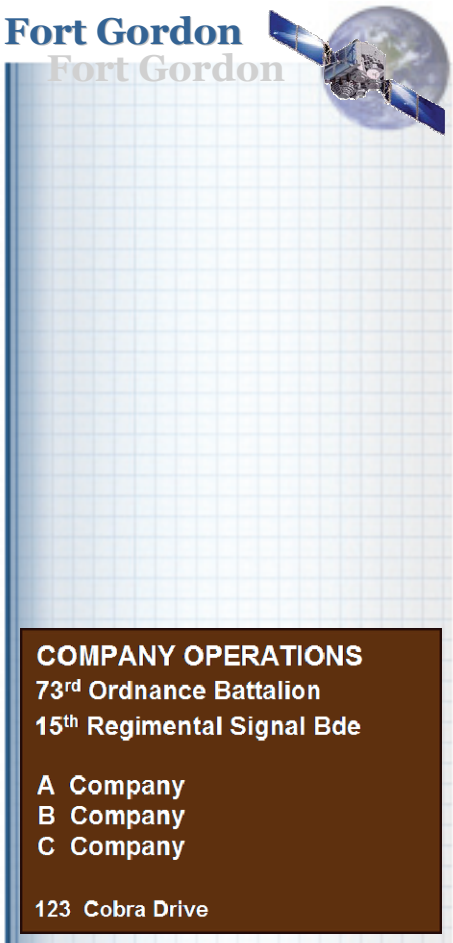

Fig. 11.45 – Example Company Headquarters Sign with More than (1) Company HQ Unit.

(c) Building address. Helvetica regular, 4-inch number height, flush left.

Exceptions to Stated Regulations. If companies or detachments are co-located in the same facility with battalion or higher headquarters units, all units will be listed on the facility identification sign of the type associated with the highest echelon unit.

11.4.5.4 Housing Areas.

- The sign should be complimentary to the architectural setting of the housing area and approved by the installation Real Property Planning Board.
- Housing numbers should be placed on the curb in front of the respective house and on the house where lighting will effectively light the numbering.

11.4.5.5 Installation Identification Signs.

- Installation identification signs name the installation and display the official US Army plaque (Fig. 11.46). The designation "United States Army" must appear at the top of the sign in accordance with AR 420-70, para 2-7h. Every installation entrance shall have an installation identification sign displaying only the US Army plaque, with the words "United States Army, Fort Gordon, and gate name as indicated in "Figure 11.47 - Installation Entrance Signs". The placement of Senior Mission Commander logo, unit crest, and other installation identification signs, monuments, or displays shall be located inside the installation beyond the cleared area of the Access Control Point (ACP) of entry. When used service-wide, these signs convey a uniform image of strength and stability to the public. Emblems, branch colors, unit mottos, names, and titles of individuals are not to be displayed.
- Installation identification signs consist of three types:
    - Sign type A1, main entrance sign, identifies the principal visitor entrance.

Fig. 11.46 – U.S. Army Plaque

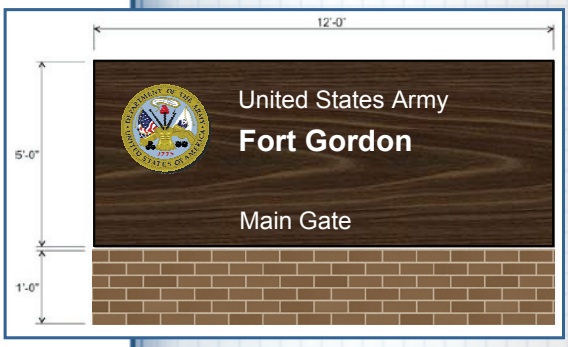

Fig. 11.47 - Installation Entrance Signs

- Sign type A2, secondary entrance sign, identifies entry points with relatively high volumes of visitor traffic.
- Sign type A3, limited access entry gate signs, identifies entry points with limited public access.

- See Technical Manual (TM) 5-807-10, Signage, paragraph 3-3, for sign specifications and paragraph 3-11 for sign placement guidelines.

11.4.5.6 Street Signs.

Street name identification signs should be designed with the same lettering, color, and materials as other information signs (Fig. 11.46).

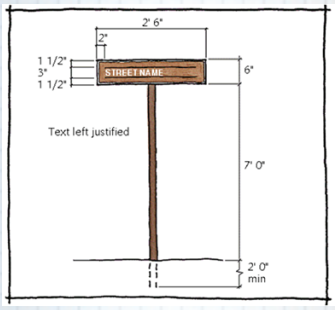

Fig. 11.46 - Typical Street Signs

11.4.5.7 Wheeled Electrical Signs.

Wheeled electrical signs will have an attractive presentation. Temporary landscape elements should be used whenever possible. The siting of this type of sign will be approved by the RPPB. No sign of this type will be left in place for longer than six (6) months. After which time, the sign will be removed or turned into a permanent sign.

11.4.5.8 Directional Signs.

Place directional signs in central locations and at major decision points along circulation routes. These signs guide the motorist or pedestrian in, around, and out of the installation (Fig. 11.47). The legibility and placement of these signs, as well as the ordering of information, is critical to their effectiveness. Messages will be grouped in the following order according to their arrow direction: forward, left, and right. In addition, placement of the message on the sign panel is determined by the arrow direction. Destinations forward and left are listed first and have flush left messages. Destinations right are listed next and have flush right messages. The arrow is centered in the space between the message and the edge of the sign. Prioritize destinations to be listed by giving the highest priority to the destinations that are most often sought by people new to the garrison or that serve as highly visible landmarks on the garrison. Those who live or work on the garrison or who visit frequently do not need the degree of help required by a first time or infrequent visitor. These signs are designed to include the following:

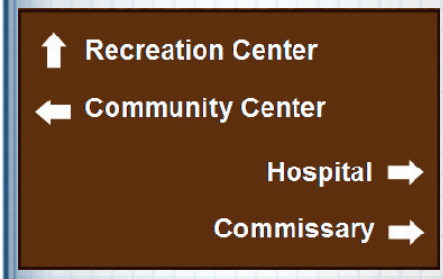

Fig. 11.47 –Directional Sign

Fort Gordon

11.4.5.8.1 Typeface: Lettering is self-adhesive backing material.

- Helvetica Medium upper and lower case

11.4.5.8.2 Arrow:

- Place at end indicating direction.
- Stoke width: Helvetica Medium cap

11.4.5.8.3 Color:

- Panel: Dark Brown
- Lettering: White
- Post: Dark Brown
- Exposed panel backs and edges: Dark Brown
- All paint: Semi gloss

11.4.5.8.4 Materials:

- Panel: Double-face 1/8" thick aluminum
- Post: 4" x 4" Cedar
- Foundation: Concrete pier or direct burial

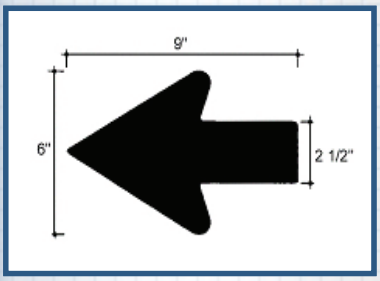

Typical Arrow For Use On All Destination Signs

11.4.5.9 Regulatory Signs.

These signs provide the rules for travel and parking on the installation. They include speed signs, turning and lane use signs, warning signs, parking control signs, etc. (Figs. 11.48 and 11.49)). Related to these signs are pavement markings and traffic signals. These signs are designed to include the following:

11.4.5.9.1 Typeface: Lettering is self-adhesive backing material.

- Helvetica Medium upper and lower case

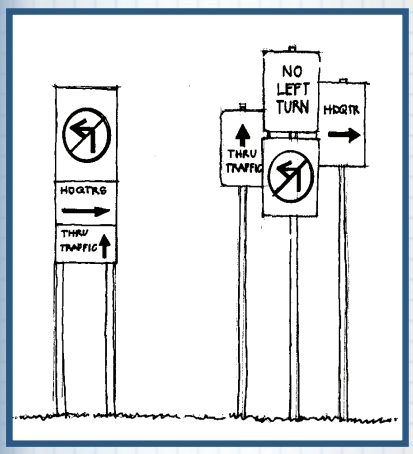

Fig. 11.48 – Sign should be Simple, Legible, and Combined

11.4.5.9.2 Color:

- Panel: Dark Brown

- Lettering: White
- Post: Dark Brown
- Exposed panel backs and edges: Dark Brown
- All paint: Semi gloss

11.4.5.9.3 Materials:

- Panel: Double-face 1/8" thick aluminum
- Post: Steel Pipe
- Foundation: Concrete pier or direct burial

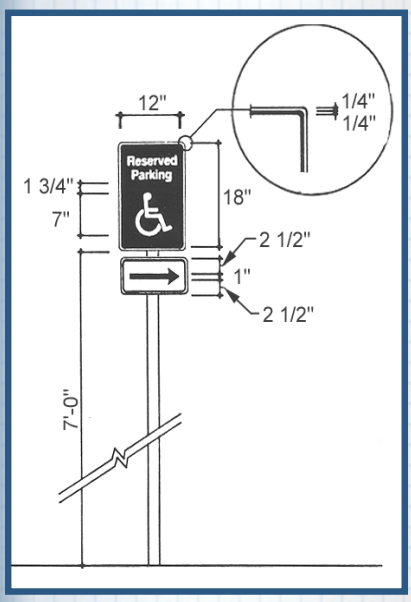

Fig. 11.49 – Regulatory Sign

11.4.5.10 Traffic Control Signs.

11.4.5.10.1 CONUS Installations. National highway standards will be used for signs to regulate vehicular traffic on CONUS installation (AR 420-72, Transportation Infrastructure and Dams, Para 2-15f). These standards are described in the Manual of Uniform Traffic Control Devices (MUTCD). Also see MTMC Pamphlet 55-14, Traffic Engineering for Better Signs and Markings. This pamphlet clarifies existing standards and provides definite guidelines for installation officials to conform to the MUTCD. These standards shall be used installation wide to include installation Access Control Points.

11.4.5.10.2 OCONUS Installations. OCONUS installation streets and roads are to be considered extensions of the road system of the host nation and shall use traffic control device standards and criteria of the host nation (AR 420-72, Transportation Infrastructure and Dams, Para 2-15e).

11.4.5.11 Prohibitory (Warning) Signs. This category of signage is intended to maintain security and safety on the installation perimeter and at other specific secure areas. These signs notify visitors of restrictions, as well as other security procedures. The guidelines for design, fabrication, and placement of warning signs are found in Technical Manual (TM) 5-807-10, Signage, para 3-9.

11.4.5.12 Electronic Exterior Signs

Fort Gordon

All exterior flashing signs, traveling lights, or signs animated by lights of changing degrees of intensity or color are prohibited.

11.4.6 Sign Placement

Placement of signs differs according to the type of sign and the specific site constraints. The following guidelines apply to placement of the majority of signs.

Do not place more than one sign at any location. Traffic rules are the exception to this rule (Fig. 11.50).

Place signs in areas free of visual clutter and landscape materials.

Place signs in locations that allow enough time for the user to read and react to the message.

Signs should not be placed to block sight lines at intersections.

Place signs approximately 1.2 meters (4 feet) above ground level to be within 10 degrees the driver's line of vision. Provide proper placement to avoid a hazard to children.

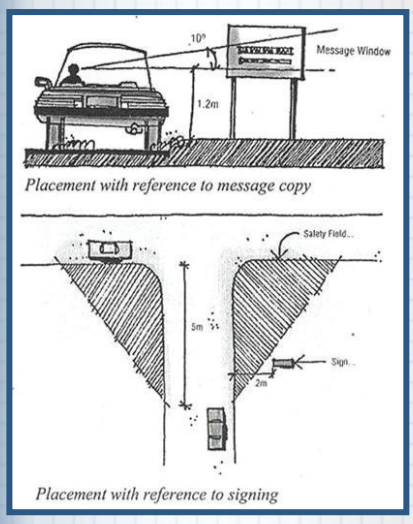

Fig. 11.50 - Placement Is Critical To Ensure Easy Readability

11.4.7 Sign System Typography.

11.4.7.1 Military Emblems. The Army has a rich tradition of military heraldry. Military emblems are an important part of the soldiers' identity and the emblems have been carefully crafted over the years to express unit pride and unique history and function of the unit. The care and use of organizational emblems in a signage system can add visual interest as well as build pride and a sense of history. However, the overuse of miscellaneous emblems can lead to clutter and a dilution of their importance. Colors for military emblems must be in accordance with the Institute of Heraldry.

11.4.7.2 Department of the Army Plaque. The plaque should be displayed on installation identification signage to emphasize the heritage and professionalism of the United States Army. The design of the plaque must be in accordance with Army Regulation (AR) 840-1, Department of the Army Seal, and Department of the Army Emblem and Branch of Service Plaques, and must be reproduced in full color.

11.4.7.3 Insignia. The use of branch insignia, shoulder sleeve insignia, coat of arms and/or distinctive insignia on headquarters signs is permitted (Fig. 11.51). All military emblems must appear in full color. Motivational symbols or motifs will not be used.

Fig. 11.51 - The use of branch insignia on Type B2 and B3 signs is permitted, i.e., Brigade and Battalion HQ signs

Fort Gordon

11.4.8 Reduce Visual Clutter.

11.4.8.1 Over-signing detracts form a uniform sign system and if left uncontrolled will eventually destroy the integrity of the system.

11.4.8.2 Clutter creates confusion and ineffectiveness. Often motorist and pedestrians are confused by the bombardment of messages that have no relationship to each other, or the communication is on such a minimal level that the sign serves no purpose (Fig. 11.52).

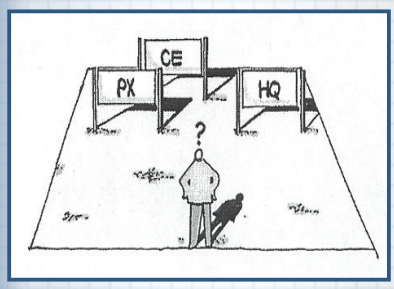

Fig. 11.52 - Visual Clutter Causes Confusion

11.4.9 Location Maps (Fig. 11.53).

11.4.9.1 The location map is an integral element of an installation entrance. The location map display provides information and sense of place to the viewer. The design and construction should be of compatible architectural materials found throughout the installation.

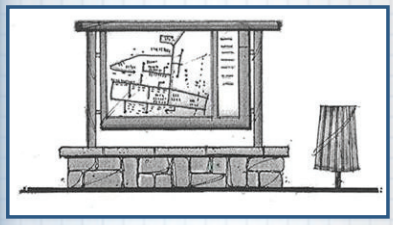

Fig. 11.53 - Location Maps Provide a Sense of Place

11.4.9.2 The location map should contain the following characteristics within the design.

- Plexiglas covered map for protection
- Architectural compatible materials used for the base
- Paved walk-up area
- Litter receptacle
- Provide parking adjacent
- Provide current takeaway maps

Acceptable Symbology Commonly used as Signage Graphics

11.4.10 GENERAL SIGN PROVISIONS

This section regulates all Fort Gordon exterior signs and interior signs positioned for exterior observance. Signs should be used only as necessary. Visual Clutter causes confusion and creates

ineffectiveness. It detracts from a uniform sign system, and if left uncontrolled will eventually destroy the integrity of the system.

Signs not specifically outlined in this IDG are not authorized unless approved by the Garrison Commander.

11.4.10.1 General sign provisions include the following:

a) Redundant, unreadable, and outdated signs should be moved.

b) DPW approval is required prior to installing, painting, remodeling, relocating, or expanding any sign.

c) No approval is required to perform normal maintenance and repair of a conforming sign or to change a message on a sign or marquee specifically designed for this purpose.

d) Public safety signs not exceeding two square feet do not require site approval. Examples include emergency telephone, restroom, and underground utilities.

e) Street signs, not located in state rights-of-ways, do not require site approval.

f) Signs conforming to previous regulations, but not conforming to this guide, will be removed and replaced.

g) All signs will either be pre-manufactured from materials meeting or exceeding the EPA required minimum recycled content or fabricated by DPW. Low quality and “homemade” signs are prohibited.

h) Any sign that is mechanically animated (i.e., revolves, rotates, or moves in any way) is prohibited.

i) Locate signs where they are visible and unobstructed.

j) Signs will not indicate names of individuals (commander, first sergeant, OIC, manager, etc.).

k) Sign wording shall be brief and limited to essential information. Words may be abbreviated if the message remains easily understood.

l) Commercial symbols are allowed only on MWR / PPV signs, Burger King, etc.

m) Signs generally are not landscaped; however, if ornamental planting occurs in the vicinity of the sign, locate the sign in the planting bed.

n) Temporary signs do not require landscaping; changeable signs are not considered temporary.

o) Any exposed lighting tubes, strings of lights, spotlights, or any illumination that causes direct glare upon an unrelated building are prohibited.

p) Any flashing signs, traveling lights, or signs animated by lights of changing degrees of intensity or color are prohibited.

q) Signs may be lit by remote lamps or backlit where nighttime identification is required such as at clubs, shopping areas, and post entry points.

r) Traffic signs will follow guidelines in the Federal Highway Administration's "Standard Alphabets for Highway Signs and Pavement Markings" standards.

s) Nonconforming signs shall not be enlarged, repaired, reconstructed, changed, including wording or graphics changes, except to comply.

t) Signs itemized in this section shall be placed at the appropriate buildings regardless of its real property category, unless specified otherwise.

u) No signs shall interfere with or confuse traffic or other aspects of safe driving conditions through use of improper wording, graphics, location, size, shape, or color.

11.4.10.1.1 Billboards

Use billboards at parade fields only. Any other sign that directs attention to a business attraction, or entertainment conducted at a location other than the premises where the sign is located, must be combined with other signs of similar character or type and requires specific site and design approval by DPW.

11.4.10.1.2 Banners

Limited to a maximum of 3-foot by 25-foot fabric material. Banners mounted on or attached to buildings, structures, and utility

poles must have DPW site approval. Sign display period limited to 30 days.

11.4.10.1.3 Directional Signs

Use these signs only for facilities frequented by non-Fort Gordon personnel. Typical examples, include post exchange, commissary, contracting, hospital, information center, and museum. These are to be located only on major thoroughfares. Use the Federal Highway Administration's "Standard Alphabets for Highway Signs and Pavement Markings" standards.

11.4.10.1.4 Historic Facilities

Upon approval from Cultural Resources, historical plaques may be used for any facility properly listed on the State or National Register of Historic Places.

11.4.10.1.5 Memorialized Facilities

Upon approval of the Memorialization Board, special facilities may be identified.

11.4.10.1.6 Parking Lot Signs

These signs include handicapped, General Officer, Command Sergeant Major, Mayor, Military Vehicle, Mother with Child, and Visitor spaces.

No reserve parking signs, besides those already mentioned, are allowed for any commanding officer, noncommissioned officer, or executive officer. No "Permit Parking Only" signs are authorized.

11.4.10.1.7 Portable Signs

These signs are prohibited. Portable is defined as signs designed to be transported from one location to another, with or without wheels or trailer, and typically have a changeable message area.

11.4.10.1.8 Residential Business Signs

These signs are prohibited. Examples include home day-care identification.

11.4.10.1.9 Restricted Area Signs

Use when authorized by the Provost Marshal. Sign color will be brown 20059.

11.4.10.1.11 Supplemental Building / Structures Signs

These signs are prohibited. Examples include paint or storage shed and kiosk or shelter identification. Safety/Warning signs specifically associated with a supplemental building/structures are allowed.

11.4.10.1.12 Advertisement / Business Announcement

One sign per location not exceeding 20 square feet. Examples include "Grand Opening", "Under New Management" and similar announcements. Sign display period limited to 30 days and only once per year per vendor.

11.4.10.1.13 Construction Signs

One sign per location not exceeding 32 square feet.

11.4.10.1.14 Official Notices, Fairs, and Special Programs

Two per building or location and/or two per intersection. Sign display period limited to 30 days.

11.4.10.1.16 Seasonal Displays

Displays not advertising a product, service, or entertainment require no DPW approval and will be treated as temporary signs.

11.4.10.2 Sign Mounting and Location

Locate identification signs typically at building entrances and/or other parts of the building visible from the main access street. Building signs should be visible from the main circulation paths to the building (vehicular or pedestrian).

11.4.10.3 When signs are mounted on buildings, the following requirements shall apply:

a) No sign may be mounted on the outside of the door, except small signs (one square foot or less) that indicate required use of an alternate entrance.

b) Signs such as "Escort Required" or changeable signs are not permitted.

c) No sign may be attached or mounted to roofs and parapets.

d) No sign shall be painted or applied directly onto the surface of a building.

e) No permanent signs shall obstruct any window, door, fire escape, ladder, or opening intended for light, air, or egress.

f) No temporary sign in windows or glass walls is allowed to cover more than 20 percent of the glass area. Temporary sign display may not exceed 30 days.

g) No signs shall interrupt the vertical and horizontal features of the facade.

h) No sign may be tacked, posted, painted, or otherwise affixed to site elements such as sheds, trees, or structures.

i) No sign may be attached to utility poles except for pole identification or warning.

j) In no case may signs be closer than 18 inches to the curb line. A minimum clear height of 3 feet 6 inches above the ground is required.

APPENDIX I

PLANT SELECTION LIST

Section:

Fort Gordon – AIT Barracks

PLANT SELECTION LIST
Plant Material Suitability Matrix

Botanical Name	Common Name	Type		Growth			Flower			Interest			Light			Salt Tolerant			Resistant		Soil Moisture			Function							
		Deciduous	Evergreen	Slow	Medium	Fast	Fall	Summer	Spring	Flower	Bark	Foliage	Shade	Sun/shade	Sun	Low	Medium	High	Drought	Pest	Moist	Average	Dry	Street tree	Shade tree	Screen	Massing	Windbreak	Hedge	Bank cover	Specimen
		Characteristics														Culture								Use							
SHADE TREES																															
Acer rubrum	Red Maple	X				X						X	X	X	X						X	X		X	X		X				X
Magnolia grandiflora	Southern Magnolia		X			X			X	X		X		X	X					X		X		X	X		X				X
Quercus falcata	Southern Red Oak	X		X								X		X	X							X		X	X		X				X
Quercus laurifolia	Laurel Oak	X		X								X		X	X					X	X	X		X	X		X				X
Quercus phellos	Willow Oak	X		X								X		X	X						X	X		X	X		X				X
Quercus virginiana	Live Oak	X		X								X		X	X					X	X	X		X	X		X				X
INTERMEDIATE TREES																															
Cercis Canadensis	Redbud	X				X			X	X			X	X	X				X	X		X					X				X
Cornus florida	Flowering Dogwood	X		X					X	X		X	X	X					X	X		X					X				X
Lagerstroemia indica	Crapemyrtle	X		X			X	X		X	X	X			X							X					X				X
Magnolia soulangeana	Saucer Magnolia	X		X					X	X	X		X	X						X		X			X						X
Magnolia virginiana	Sweet Bay Magnolia		X	X					X	X	X	X	X	X						X	X	X			X		X				X
Myrica cerifera	Southern Wax Myrtle		X			X			X			X		X	X					X		X				X	X				X
Nyssa sylvatica	Black Tupelo	X		X								X		X	X					X	X	X					X				X
Taxodium distichum	Common Bald Cypress	X				X					X	X		X	X						X	X		X			X				
EVERGREEN TREES																															
Juniperus virginiana	Eastern Red Cedar		X			X					X			X	X					X		X	X			X	X	X			X
Pinus palustris	Longleaf Pine		X			X						X		X	X							X				X	X	X			X
Sabal palmetto	Cabbage Palmetto		X	X								X			X					X		X		X			X				X
Trachycarpus fortunei	Windmill Palm		X	X								X			X				X			X	X	X			X				X
EVERGREEN SHRUBS																															
Camellia sasanqua	Fall-blooming Camellia		X	X			X			X		X		X	X						X	X				X					X
Ilex opaca 'Savannah'	Savannah Holly		X	X								X		X	X					X		X				X					X
Ilex vomitoria	Yaupon Holly		X	X								X		X	X					X		X				X	X				X
Ilex vomitoria 'Stokes dwarf'	Dwarf Yaupon Holly		X	X								X		X	X					X		X				X	X				X
Illicium floridanum	Florida Anise-Tree		X			X	X			X		X	X	X	X					X	X	X					X				X
Mahonia bealei	Leatherleaf Mahonia		X	X					X	X		X	X	X								X					X				X
Osmanthus fragrans	Fragrant Tea Olive		X			X	X			X		X	X	X						X		X				X	X				X

Section:

Fort Gordon – AIT Barracks

PLANT SELECTION LIST
Plant Material Suitability Matrix

Botanical Name	Common Name	Type		Growth			Flower			Interest			Light			Salt Tolerant			Resistant		Soil Moisture			Function							
		Deciduous	Evergreen	Slow	Medium	Fast	Fall	Summer	Spring	Flower	Bark	Foliage	Shade	Sun/shade	Sun	Low	Medium	High	Drought	Pest	Moist	Average	Dry	Street tree	Shade tree	Screen	Massing	Windbreak	Hedge	Bank cover	Specimen
		Characteristics														Culture								Use							
Prunus caroliniana	Cherry Laurel		X	X					X	X		X		X	X							X				X					X
Raphiolepis indica	Indian Hawthorn		X	X					X	X		X	X	X	X				X		X	X	X				X				X
Rhododendron indicum	Native Azalea		X		X				X	X		X	X	X							X	X					X				X
DECIDUOUS SHRUBS																															
Hydrangea macrophylla	Bigleaf Hydrangea	X				X		X		X			X	X							X	X					X				X
Hydrangea quercifolia	Oakleaf Hydrangea	X				X		X		X	X			X	X					X		X					X				X
GROUNDCOVERS/VINES																															
Hemerocallis	Daylilly	X				X	X	X		X		X		X	X					X		X					X				
Vinca major	Bigleaf Periwinkle		X			X			X	X		X		X	X							X					X				
GRASSES																															
Cynodon dactylon 'Tiflawn'	Common Bermuda Grass	X				X						X			X							X					X				
Ermochloa ophiuroides	Centipede Grass	X		X						X				X	X							X					X				

APPENDIX J

DRAWINGS

(Appendix J is provided under separate cover)

APPENDIX K
Life Cycle Cost Analysis Fuel Cost Information
(REV 1.0, 25 Jan 2007)

The following utility rates for this installation are provided for the purpose of performing life cycle cost calculations in response to this solicitation and for design development in accordance with Section 01 33 16 Design After Award:

Electrical:

Demand Charge - $ n/a per kilowatt

Summer Rate - $ 0.795 per kilowatt-hour (1 Jun - 30 Sep)

Winter Rate - $ 0.0629 per kilowatt-hour (1 Oct - 31 May)

Natural Gas:

Commodity Charge Rate - $ 0.8198 per therm

Water:

Commodity Charge Rate - $ 1.8206 per kgal

Sewer:

Commodity Charge Rate - $ 2.1221 per kgal

Purchased/Central Steam

Commodity Charge Rate - $ n/a per n/a

Purchased High Temperature Water:

Commodity Charge Rate - $ n/a per n/a

Purchased Chilled Water:

Commodity Charge Rate - $ n/a per n/a

APPENDIX L

LEED PROJECT CREDIT GUIDANCE

Appendix L

LEED Project Credit Guidance (OCT 09)

This spreadsheet indicates Army required credits, Army preferred credits, project-specific ranking of individual point preferences, assumptions guidance for individual credits, and references to related language in the RFP for individual credits.

LEED Credit Paragraph	LEED Project Credit Guidance	**Army Guidance:** Required - Preferred - Avoid	**Project Preference Ranking**: (1=most preferred, blank=no preference, X=preference not applicable to this credit, Rqd=required)	
PAR	**FEATURE**			**REMARKS**
SUSTAINABLE SITES				
SSPR1	Construction Activity Pollution Prevention (PREREQUISITE)	Rqd	Rqd	All LEED prerequisites are required to be met.
SS1	Site Selection		X	See paragraph LEED CREDITS COORDINATION.

SS2	Development Density & Community Connectivity - OPTION 1 DENSITY		X	See paragraph LEED CREDITS COORDINATION.
	Development Density & Community Connectivity - OPTION 2 CONNECTIVITY		X	See paragraph LEED CREDITS COORDINATION.
SS3	Brownfield Redevelopment		X	See paragraph LEED CREDITS COORDINATION.
SS4.1	Alternative Transportation: Public Transportation Access		X	See paragraph LEED CREDITS COORDINATION.
SS4.2	Alternative Transportation: Bicycle Storage & Changing Rooms	Pref		Assume that non-transient building occupants are NOT housed on Post unless indicated otherwise.
SS4.3	Alternative Transportation: Low Emitting & Fuel Efficient Vehicles - OPTION 1			Requires provision of vehicles, which cannot be purchased with construction funds. Assume Government will not provide vehicles unless indicated otherwise. Assume that 50% of GOV fleet is NOT alternative fuel vehicles unless indicated otherwise.
SS4.3	Alternative Transportation: Low Emitting & Fuel Efficient Vehicles - OPTION 2	Pref		
SS4.3	Alternative Transportation: Low Emitting & Fuel Efficient Vehicles - OPTION 3			Requires provision of vehicle refueling stations. Installation must support type of fuel and commit to maintaining/supporting refueling stations.
SS4.4	Alternative Transportation: Parking Capacity	Pref		

SS5.1	Site Development: Protect or Restore Habitat			
SS5.2	Site Development: Maximize Open Space	Pref		Assume AGMBC option for aggregated open space at another location on the installation is not available to the project unless indicated otherwise.
SS6.1	Stormwater Design: Quantity Control	Pref		See paragraph STORMWATER MANAGEMENT.
SS6.2	Stormwater Design: Quality Control	Pref		See paragraph STORMWATER MANAGEMENT.
SS7.1	Heat Island Effect: Non-Roof			
SS7.2	Heat Island Effect: Roof	Pref		Coordinate with nearby airfield requirements, which may preclude this credit.
SS8	Light Pollution Reduction	Pref		
WATER EFFICIENCY				
WEPR1	Water Use Reduction (Version 3 only)	Rqd	Rqd	All LEED prerequisites are required to be met.
WE1.1	Water Efficient Landscaping: Reduce by 50%	Pref		See paragraph IRRIGATION. Project must include landscaping to be eligible for this credit.
WE1.2	Water Efficient Landscaping: No Potable Water Use or No Irrigation	Pref		Project must include landscaping to be eligible for this credit.
WE2	Innovative Wastewater Technologies - OPTION 1			
WE2	Innovative Wastewater Technologies - OPTION 2			
WE3	Water Use Reduction	Pref		See paragraph BUILDING WATER USE REDUCTION.

ENERGY AND ATMOSPHERE				
EAPR1	Fundamental Commissioning of the Building Energy Systems (PREREQUISITE)	Rqd	Rqd	All LEED prerequisites are required to be met.
EAPR2	Minimum Energy Performance (PREREQUISITE)	Rqd	Rqd	All LEED prerequisites are required to be met.
EAPR3	Fundamental Refrigerant Management (PREREQUISITE)	Rqd	Rqd	All LEED prerequisites are required to be met.
EA1	Optimize Energy Performance	Rqd	1	Earning of LEED EA1 points as indicated in paragraph ENERGY CONSERVATION, as a minimum, is required.
EA2.1	On-Site Renewable Energy	Pref		See paragraph ENERGY CONSERVATION.
EA3	Enhanced Commissioning			The Commissioning Authority may be provided through the Design-Build Contractor only if in accordance with USGBC Credit Interpretation Ruling (CIR) dated 9/15/06. Commissioning Authority activities begin during design phase and continue well beyond beneficial occupancy. Assume Government will not provide CxA post-occupancy activities unless indicated otherwise.
EA4	Enhanced Refrigerant Management	Pref		
EA5	Measurement & Verification			Assume Government will not provide post-occupancy activities unless indicated otherwise.
EA6	Green Power		X	See paragraph LEED CREDITS COORDINATION.
MATERIALS AND RESOURCES				

MRPR1	Storage & Collection of Recyclables (PREREQUISITE)	Rqd	Rqd	All LEED prerequisites are required to be met. Coordinate with Installation during design development on collection service and receptacles.
MR1	Building Reuse			
MR2.1	Construction Waste Management: Divert 50% From Disposal	Pref		See paragraph CONSTRUCTION AND DEMOLITION WASTE MANAGEMENT.
MR2.2	Construction Waste Management: Divert 75% From Disposal	Pref		
MR3.1	Materials Reuse 5%			
MR3.2	Materials Reuse 10%			
MR4.1	Recycled Content: 10% (post-consumer + 1/2 pre-consumer)	Pref		See paragraph RECYCLED CONTENT.
MR4.2	Recycled Content: 20% (post-consumer + 1/2 pre-consumer)	Pref		
MR5.1	Regional Materials:10% Extracted, Processed & Manufactured Regionally			
MR5.2	Regional Materials:20% Extracted, Processed & Manufactured Regionally			
MR6	Rapidly Renewable Materials	Pref		See paragraph BIOBASED AND ENVIRONMENTALLY PREFERABLE MATERIALS and

				paragraph FEDERAL BIOBASED PRODUCTS PREFERRED PROCUREMENT PROGRAM.
MR7	Certified Wood	Pref		See paragraph BIOBASED AND ENVIRONMENTALLY PREFERABLE MATERIALS.
INDOOR ENVIRONMENTAL QUALITY				
EQPR1	Minimum IAQ Performance (PREREQUISITE)	Rqd	Rqd	All LEED prerequisites are required to be met.
EQPR2	Environmental Tobacco Smoke (ETS) Control (PREREQUISITE)	Rqd	Rqd	All LEED prerequisites are required to be met. Assume all buildings are smoke free unless indicated otherwise (family housing, barracks and other lodging are facility types where smoking may be permitted in some cases).
EQ1	Outdoor Air Delivery Monitoring			
EQ2	Increased Ventilation			
EQ3.1	Construction IAQ Management Plan: During Construction	Pref		See paragraph CONSTRUCTION IAQ MANAGEMENT.
EQ3.2	Construction IAQ Management Plan: Before Occupancy	Pref		See paragraph CONSTRUCTION IAQ MANAGEMENT.
EQ4.1	Low Emitting Materials: Adhesives & Sealants	Pref		See paragraph LOW-EMITTING MATERIALS.
EQ4.2	Low Emitting Materials: Paints & Coatings	Pref		See paragraph LOW-EMITTING MATERIALS.
EQ4.3	Low Emitting Materials: Carpet/Flooring Systems	Pref		See paragraph LOW-EMITTING MATERIALS.
EQ4.4	Low Emitting Materials: Composite Wood & Agrifiber Products	Pref		See paragraph LOW-EMITTING MATERIALS.
EQ5	Indoor Chemical & Pollutant Source Control	Pref		System requiring weekly cleaning to earn this credit is not a permitted option unless indicated

				otherwise.
EQ6.1	Controllability of Systems: Lighting			
EQ6.2	Controllability of Systems: Thermal Comfort			
EQ7.1	Thermal Comfort: Design	Pref		See paragraph APPLICABLE CRITERIA
EQ7.2	Thermal Comfort: Verification			Project must earn credit EQ7.1 to be eligible for this credit. Assume Government will not provide post-occupancy activities unless indicated otherwise.
EQ8.1	Daylight & Views: Daylight 75% of Spaces	Pref		See paragraph DAYLIGHTING.
EQ8.2	Daylight & Views: Views for 90% of Spaces	Pref		
INNOVATION & DESIGN PROCESS				
IDc1.1	Innovation in Design			See paragraph INNOVATION AND DESIGN CREDITS. Assume Government will not provide any activities associated with ID credits.
IDc1.2	Innovation in Design			
IDc1.3	Innovation in Design			
IDc1.4	Innovation in Design			
IDc2	LEED Accredited Professional	Rqd	Rqd	LEED AP during design and construction is required.
REGIONAL PRIORITY CREDITS (Version 3 only)				See paragraph LEED CREDITS COORDINATION.

APPENDIX M

LEED Owner Project Requirements

Owner's Project Requirements Document for LEED Fundamental Commissioning

Project: AIT Trainee Barracks, Ft. Gordon, GA

Approved: _____ _____ _____
Name Owner's Representative Date

_____ _____ _____
Name Design Agent's Representative Date

Overview and Instructions

The purpose of this document is to provide clear and concise documentation of the Owner's goals, expectations and requirements for commissioned systems, and shall be utilized throughout the project delivery and commissioning process to provide an informed baseline and focus for design development and for validating systems' energy and environmental performance.

The Owner's Project Requirements Document is a required document for LEED Version 2.2 EA Prerequisite 1, Fundamental Commissioning of the Building Energy Systems. It shall be completed by the Corps District/Design Agent based on coordination with the Installation/User/Proponent and shall be approved by the Installation/User/Proponent representative.

Use of this template is not required, nor are there any restrictions on editing of it. It is provided simply as a tool to assist project teams in meeting the documentation requirements for LEED Fundamental Commissioning.

The intent of the Owner's Project Requirements Document, per the LEED v2.2 Reference Guide, is to detail the functional requirements of a project and the expectations of the building's use and operation as it relates to commissioned systems. This template contains the basic recommended components indicated in the LEED v2.2 Reference Guide. It should be adapted as needed to suit the project, remaining reflective of the LEED intent.

The Owner's Project Requirements Document should ideally be completed before the start of design and furnished to the design team. It must be completed prior to the approval of Contractor submittals of any commissioned equipment or systems to meet LEED requirements.

Updates to the Owner's Project Requirements Document throughout the course of project delivery shall be made by the Corps District/Design Agent based on decisions and agreements coordinated with and agreed to by the Installation/User/Proponent.

The Owner's Project Requirements Document shall be included in the project's LEED documentation file under EA PR1, Fundamental Commissioning of the Building Energy Systems.

Owner's Project Requirements Document for LEED Fundamental Commissioning

Table of Contents

1. Owner and User Requirements
   - Primary Purpose, Program and Use
   - Project History
   - Broad Goals
2. Environmental and Sustainability Goals
   - Energy Efficiency Goals
   - General
   - Siting
   - Building Façade
   - Building Fenestration
   - Building Envelope
   - Roof
   - Other
3. Indoor Environmental Quality Requirements
   - Intended Use
   - Occupancy Schedule
   - Accommodations for After-Hours Use
   - Lighting, Temperature, Humidity, Air Quality, Ventilation, Filtration
   - Acoustics
   - Occupant Ability to Adjust System Controls
   - Types of Lighting
4. Equipment and Systems Expectations
   - Space Heating
   - Ventilation
   - Air Conditioning
   - Refrigeration
   - HVAC Controls
   - Domestic Hot Water
   - Lighting Controls
   - Daylighting Controls
   - Emergency Power
   - Other
5. Building Occupant and O&M Personnel Requirements
   - Facility Operation
   - EMCS
   - Occupant Training and Orientation
   - O&M Staff Training and Orientation

TABLE 1

1. *Owner and User Requirements*

What is the primary purpose, program and use of this project? (example: office building with data center)

Barracks, administrative Office area plus storage areas.

Describe pertinent project history. (example: standard design development)

This is unique facility, no standard design available.

Broad Goals

What are the broad goals relative to program needs?

To provide economical, facilities that meet the basic functional needs of the soldier and can be easily adapted to changing needs.

What are the broad goals relative to future expansion?

The program does not require accommodation of future expansion of the facility.

What are the broad goals relative to flexibility?

A high degree of flexibility to reconfigure spaces within the building envelope for mission or force structure changes.

What are the broad goals relative to quality of materials?

Similar to a representative facility of the same type in the private sector. 25-year life with normal maintenance. Durable finishes are desired.

What are the broad goals relative to construction costs?

Facility must meet budget.

What are the broad goals relative to operational costs?

Meet EPACT (reduced energy consumption). Minimize operating costs as much as possible within budget.

Other broad goals: *(Insert as applicable)*

To reduce construction time to 12 months or less.

2. Environmental and Sustainability Goals

What are the project goals relative to sustainability and environmental issues? (example: LEED Silver rating)

LEED Silver rating, Version 3.0

What are the project goals relative to energy efficiency? (example: Meet EPACT)

Meet EPACT 2005

What are the project goals and requirements for building siting that will impact energy use?

Site orientation is fixed since this is a renovation of an existing building.

What are the project goals and requirements for building facade that will impact energy use?

Exterior appearance to be compatible with adjoining environment's architectural theme.

What are the project goals and requirements for building fenestration that will impact energy use?

Windows are preferred at occupied areas. Antiterrorism/Force Protection criteria (UFC 4-010-01) requires laminated glass and heavy duty frame.

What are the project goals and requirements for building envelope that will impact energy use?

ASHRAE 90.1 and EPACT are required.
Special local requirements are indicated in Paragraph 6 of Section 01 10 00.

What are the project goals and requirements for building roof that will impact energy use?

Special local requirements are indicated in Paragraph 6 of Section 01 10 00.

Other: *(Insert as applicable)*

_____
_____
_____

3. Indoor Environmental Quality Requirements

What is the intended use for all spaces? For all spaces that have an intended use that is not readily apparent from the space name, provide this information in Table 1.

NONE_____
_____
_____

What is the anticipated occupancy schedule (numbers of occupants and time frames) for all occupied spaces? Indicate the default occupancy schedule below and for all spaces that have an occupancy schedule that differs from the default, provide this information in Table 1.

Typical occupancy schedule is normal business work day with occasional evening and weekend use by different functional groups. _____
_____
_____

What accommodations for after-hours use are required? (example: access control, lighting controls, HVAC controls) Indicate general accommodations required below and for all spaces that have special requirements, provide this information in Table 1.

Individual keys or combination lock for after-hours access. Lighting motion sensors override and/or wall switches._____
_____
_____

What are the lighting, temperature, humidity, air quality, ventilation and filtration requirements for all spaces? Indicate the default requirements below and for all spaces that have a requirement that differs from the default, provide this information in Table 1.

Lighting: IESNA RP-1-04_____
Temperature: See Table 5-1 in Section **01 10 00**. _____

Humidity: 50% _____
Air Quality: ASHRAE 62.1 _____

Ventilation: ASHRAE 62.1 _____

Filtration: _____

What are the acoustical requirements for all spaces? Indicate the default acoustical requirements below and for all spaces that have a requirement that differs from the default, provide this information in Table 1.

See Section 01 10 00

What is the desired level of occupant ability to adjust systems controls? Indicate the default desired levels below and for all spaces that have a desired level that differs from the default, provide this information in Table 1.

Lighting: Per Section 01 10 00

Temperature: None
Humidity: None
Air Quality: None

Ventilation: Per **01 10 00**

What, if any, specific types of lighting are desired? (example: fluorescent in 2x2 grid, accent lighting, particular lamps)

None

4. Equipment and System Expectations

(Complete for each category as applicable or indicate "none identified" or "N/A". Add desired features information for other anticipated commissioned systems as applicable)

Indicate desired features for the following commissioned system: Space Heating

Desired Type: Per 01 10 00

Quality:

Preferred Manufacturer:
Reliability:
Automation:

Flexibility:
Maintenance Requirements:
Efficiency Target:

Desired Technologies:

Indicate desired features for the following commissioned system: Ventilation

Desired Type: Per 01 10 00

Quality:

Preferred Manufacturer: _____
Reliability: _____
Automation: _____

Flexibility:_____
Maintenance Requirements: _____
Efficiency Target: _____

Desired Technologies: _____

Indicate desired features for the following commissioned system: Air Conditioning

Desired Type: Per 01 10 00 _____

Quality: _____

Preferred Manufacturer: _____
Reliability: _____
Automation: _____

Flexibility:_____
Maintenance Requirements: _____
Efficiency Target: _____

Desired Technologies: _____

Indicate desired features for the following commissioned system: Refrigeration

Desired Type: Per 01 10 00 _____

Quality: _____

Preferred Manufacturer: _____
Reliability: _____
Automation: _____

Flexibility:_____
Maintenance Requirements: _____
Efficiency Target: _____

Desired Technologies:

Indicate desired features for the following commissioned system: HVAC Controls

Desired Type: Per 01 10 00 _____

Quality: _____

Preferred Manufacturer: _____
Reliability: _____
Automation: _____

Flexibility:_____
Maintenance Requirements: _____
Efficiency Target: _____

Desired Technologies: _____

Indicate desired features for the following commissioned system: Domestic Hot Water

Desired Type: Per 01 10 00 _____

Quality: _____

Preferred Manufacturer: _____
Reliability: _____
Automation: _____

Flexibility:_____
Maintenance Requirements: _____
Efficiency Target: _____

Desired Technologies: _____

Indicate desired features for the following commissioned system: Lighting Controls

Desired Type: Per 01 10 00 _____

Quality: _____

Preferred Manufacturer: _____
Reliability: _____
Automation: _____

Flexibility:_____
Maintenance Requirements: _____
Efficiency Target: _____

Desired Technologies: _____

Indicate desired features for the following commissioned system: Daylighting Controls

Desired Type: Per 01 10 00 _____

Quality: _____

Preferred Manufacturer: _____
Reliability: _____
Automation: _____

Flexibility:_____
Maintenance Requirements: _____
Efficiency Target: _____

Desired Technologies: _____

Indicate desired features for the following commissioned system: Emergency Power

Desired Type: Per 01 10 00 _____

Quality: _____

Preferred Manufacturer: _____
Reliability: _____
Automation: _____

Flexibility: _____
Maintenance Requirements: _____
Efficiency Target: _____

Desired Technologies: _____

Indicate desired features for the following commissioned system: Other - _____

Desired Type: _____

Quality: _____

Preferred Manufacturer: _____
Reliability: _____
Automation: _____

Flexibility: _____
Maintenance Requirements: _____
Efficiency Target: _____

Desired Technologies: _____

5. Building Occupant and O&M Personnel Requirements

How will the facility be operated? Who will operate the facility?

Varies. DPW Contractor and/or staff. _____

Will the facility be connected to an EMCS? If so, what are the interface requirements? (example: monitoring points, control points, scheduling)

Per 01 10 00 _____

What is the desired level of training and orientation for building occupants to understand and use the building systems?

Minimal for occupants. Per RFP

What is the desired level of training and orientation for O&M staff to understand and maintain the building systems?

As indicated in Section CONSTRUCTION CLOSEOUT

Table 1

Space	Use / Activity	Num of Occs	Special Occupancy Schedule	After Hours Use Reqmt.	Special Cooling Reqmt.	Special Heating Reqmt.	Special Humidity Reqmt.	Special Ventil./Filtration Reqmt.	Special Acoustic Reqmt.	Special Lighting Reqmt.	Special Occup Adjustability Reqmt.

APPENDIX N
LEED Requirements for Multiple Contractor Combined Projects

Not Used

APPENDIX O
LEED Strategy Tables

Not Used

APPENDIX P

LEED Registration of Army Projects

15 April 2010

Number of Registrations
Each building must be registered separately, except multiple instances of a standard building on a shared site may be registered as a single project. If a single registration for multiple buildings is chosen, all buildings under the single registration must earn exactly the same points. Do not register buildings that are exempt from a specific LEED achievement requirement.

Typical Registration Procedure
1. Login, complete the online registration form (see guidance below) at the GBCI LEED Online website http://www.gbci.org/DisplayPage.aspx?CMSPageID=174 and submit it online.
2. Pay the registration fee via credit card (USACE staff: credit card PR&C is funded by project design or S&A funds).
3. GBCI will follow up with a final invoice, the LEED-online passwords and template information.
4. The individual who registers the project online is, by default, the Project Administrator.

Completing the Registration Form

BEFORE YOU BEGIN:
Create a personal account with USGBC if you do not have one.
You will need the following information:
Project name as it appears in P2 (obtain from USACE Project Manager)
Building number/physical address of project
Zip code for Installation/project location
Anticipated construction start and end dates
Total gross area all non-exempt buildings in registration
Total construction cost all non-exempt buildings only (see Project Details Section instructions below)

ACCOUNT/LOGIN INFORMATION
1. The person registering the project **must have an account with USGBC** (login and password) to complete the form. Go to http://www.gbci.org/ , click on “register a project” at the drop-down menu for project certification (at the top of the page) and select “register now for LEED 2009” to start the project registration process. If you have an account, login with your email address and password and select “register new project” to proceed. If you do not have an account, you may select “register a new account” and follow the instructions. It is recommended that you create an account separately on the USGBC website before you start the form. IMPORTANT: USACE team members are members of USGBC and are eligible for Member prices. USACE team members registering projects should be sure to include the USACE Corporate Access ID in their personal account profile (if you do not have it contact richard.l.schneider@usace.army.mil or judith.f.milton@usace.army.mil for the number).
2. The Account/Login Information section is filled out by the person registering the project. It may be a Contractor or a USACE staff member.

ELIGIBILITY SECTION
Follow directions (accepting the terms and conditions)
Review your profile information and make corrections if needed

RATING SYSTEM SELECTION SECTION
Select single project registration and I know which rating system.
Select the rating system - currently only LEED-NC and LEED for Homes are approved for Army use without special approval.
LEED Minimum Program Requirements: select YES

RATING SYSTEM RESULTS SECTION

Confirm selected rating system.

PROJECT INFORMATION SECTION

Project Title: Begin the project title with a one-word identifier for the Installation. Do not include the word "Fort". After this match the project name used in P2 (contact the USACE Project Manager for this information) and identify the building being registered. Example: "Stewart 4th IBCT - DFAC".
Project Address 1 and 2: This is the physical location of the project. Provide building number, street address, block number or whatever is known to best describe the location of the project on the Installation.
Project City: Installation Name
State, Country, Zip Code: Self-explanatory
Anticipated Construction Start and End Dates: Self-explanatory – give your best guess if unknown. Note that required data entry format is: 1 or 2 digit month/1 or 2 digit date/4 digit year (example 3/23/2010)
Gross Square Footage: Provide total area all buildings in LEED project. Exclude the area of any buildings that are exempt from the LEED achievement requirement (for example, exclude an unconditioned storage shed to be constructed with a barracks complex).
Is Project Confidential: Indicate NO except, if project has security sensitivity (elements that are FOUO or higher security), indicate YES.
Notification of Local Chapter: Indicate NO unless Government/USACE Project Manager requests you to indicate YES.
Anticipated Project Type: Select the most appropriate option from the drop-down menu.
Anticipated Certification Level: Select the applicable option from the drop-down menu (Silver is the usual level).

PROJECT OWNER INFORMATION SECTION

Project Owner First Name, Last Name, email, phone, address: The Project Owner is the USACE Project Manager. Obtain this info from the USACE Project Manager.
Organization: U.S. Army Corps of Engineers. This field MUST be completed this way because it will be used as a search field by higher HQ to find all USACE registered projects. You may supplement it with district name at the end but DO NOT revise or use an acronym.
May we publish Owner information: Indicate NO
Owner Type: Pick Federal Government from drop-down menu.
Project Owner Assertion: Check the box

PAYMENT INFORMATION

Self-explanatory

APPENDIX Q
REV 1.1 – 31 MAY 2009
AREA COMPUTATIONS

Computation of Areas: Compute the "gross area" and "net area" of facilities (excluding family housing) in accordance with the following subparagraphs:

(1) Enclosed Spaces: The "gross area" is the sum of all floor spaces with an average clear height ≥6′-11″ (as measured to the underside of the structural system) and having perimeter walls which are ≥4′-11″. The area is calculated by measuring to the exterior dimensions of surfaces and walls.

(2) Half-Scope Spaces: Areas of the following spaces shall count as one-half scope when calculating "gross area":

- Balconies
- Porches
- Covered exterior loading platforms or facilities
- Covered but not enclosed passageways and walks
- Open stairways (both covered and uncovered)
- Covered ramps
- Interior corridors (Unaccompanied Enlisted Personnel Housing Only)

(3) Excluded Spaces: The following spaces shall be excluded from the "gross area" calculation:

- Crawl spaces
- Uncovered exterior loading platforms or facilities
- Exterior insulation applied to existing buildings
- Open courtyards
- Open paved terraces
- Uncovered ramps
- Uncovered stoops
- Utility tunnels and raceways
- Roof overhangs and soffits measuring less than 3′-0″ from the exterior face of the building to the fascia

(4) Net Floor Area: Where required, "net area" is calculated by measuring the inside clear dimensions from the finish surfaces of walls. If required, overall "assignable net area" is determined by subtracting the following spaces from the "gross area":

- Basements not suited as office, special mechanical, or storage space
- Elevator shafts and machinery space
- Exterior walls
- Interior partitions
- Mechanical equipment and water supply equipment space
- Permanent corridors and hallways
- Stairs and stair towers
- Janitor closets
- Electrical equipment space
- Electronic/communications equipment space

RMS SUBMITTAL REGISTER INPUT FORM

CONTRACT NUMBER

DELIVERY ORDER

TITLE AND LOCATION

Button <-----Right click for Instructions

SECTION	PARAGRAPH NUMBER	DESCRIPTION OF ITEM SUBMITTED	TYPE OF SUBMITTAL											CLASSIFICATION						REVIEWING OFFICE					
			01 - PRECON SUBMITTALS	02 - SHOP DRAWINGS	03 - PRODUCT DATA	04 - SAMPLES	05 - DESIGN DATA	06 - TEST REPORTS	07 - CERTIFICATES	08 - MFRS INSTRUCTIONS	09 - MFRS FIELD REPORT	10 - O&M DATA	11 - CLOSEOUT SUBMITTALS	FIO - FOR INFORMATION ONLY	GA - GOVERNMENT APPROVED	DA - DESIGNER OF RECORD APPROVAL	CR - CONFORMANCE REVIEW	DA / CR	DA / GA	DO - DISTRICT OFFICE	AO - AREA OFFICE	RO - RESIDENT OFFICE	PO - PROJECT OFFICE	DR - DESIGNER OF RECORD	AE - ARCHITECT / ENGINEER
00 72 00	52.236-13	Accident Prevention Plan	X														X				X				
00 73 00	1.11	Dev. From Accept. Design. No Deviation from Contract					X											X			X			X	
00 73 00	1.11	Dev. From Accepted Design - Deviates from Contract					X												X		X			X	
00 73 00	1.17	Supplemental Price Breakdown	X											X							X				
00 73 00	1.18	SSHO Qualifications	X												X						X				
01 10 00	5.2.3.1	(if concrete pavement) Joint Layout Plan with design drawings					X										X								
01 10 00	5.5.2	Building Envelope Sealing Performance Testing						X						X							X				
01 10 10	***	Tests as Req by Codes - DOR Develops Test Program						X						X							X			X	
01 10 00	5.8.3	BAS Review Information		X														X		X	X			X	
01 10 00	5.8.3	BAS Performance Verification Test						X						X							X			X	
01 10 00	5.8.4	Testing Adjusting and Balancing						X						X							X			X	
01 10 00	5.8.5	Commissioning						X						X							X			X	
01 10 00	6.15	Environmental As Required for Site Specific					X										X				X			X	
01 10 00	6.16	Permits as required for Site specific					X										X				X			X	
01 10 00	5.10.2	Fire Protection Tests						X	X					X							X			X	
01 32 01.00 10	3.4.1	Preliminary Project Schedule	X												X						X				
01 32 01.00 10	3.4.2	Initial Project Schedule	X												X						X				
01 32 01.00 10	3.4.3	Design Package Schedule	X												X						X				
01 32 01.00 10	3.6.1	Periodic schedule updates from the Contractor	X												X						X				
01 32 01.00 10	3.7	Time Extension Request (Schedule)	X												X						X				
01 33 00	1.8	Submittal Register - DOR Input Required	X												X						X			X	
01 33 00	1.8	Submittal Register Updates (Design Packages, etc.)	X												X						X			X	
01 33 00	1.3.1	Substitution of Manuf or Model Named in Proposal		X	X													X			X			X	
01 33 16	1.2	Identify Designer(s) of Record	X												X						X				
01 33 16	1.1.2 / 3.2.4	Fast Track Design Package(s)					X										X			X	X				
01 33 16	1.2	Identification of all Designers of Record	X														X				X				
01 33 16	3.2.1	Site and Utility Des Package, incl. Substantiation					X										X			X	X				
01 33 16	3.2.2/3.5	Interim Des Subm Package(s), incl. Substantiation					X										X			X	X				
01 33 16	3.5.1	Drawings					X										X			X	X				
01 33 16	3.5.2.2	Sitework Design Analyses					X										X			X	X				
01 33 16	3.5.2.3	Structural Design Analyses					X										X			X	X				
01 33 16	3.5.2.4	Security Design Analyses					X										X			X	X				
01 33 16	3.5.2.5	Architectural Design Analyses					X										X			X	X				
01 33 16	3.5.2.6	Mechanical Design Analyses					X										X			X	X				
01 33 16	3.5.2.7	Life Safety Design Analyses					X										X			X	X				
01 33 16	3.5.2.8	Plumbing Design Analyses					X										X			X	X				
01 33 16	3.5.2.9	Elevator Design Analyses (as Applicable)					X										X			X	X				
01 33 16	3.5.2.10	Electrical Design Analyses					X										X			X	X				
01 33 16	3.5.2.11	Telecommunications Design Analyses					X										X			X	X				
01 33 16	3.5.2.12	Cathodic Protection Design Analyses					X										X			X	X				
01 33 16	3.5.3	Geotechnical Investigations and Reports					X										X			X	X				
01 33 16	3.5.4	LEED Submittals					X										X			X	X				
01 33 16	3.5.5	Energy Conservation Documentation					X										X			X	X				
01 33 16	3.5.6	Specifications					X										X			X	X				
01 33 16	3.5.7	Building Rendering					X										X			X	X				
01 33 16	3.2.4/3.7	Final Des Submittal Package(s), incl. Substantiation					X										X			X	X				
01 33 16	3.7.5	DD Form 1354 (Transfer of Real Property)											X				X				X				
01 33 16	3.2.5/3.8	Design Complete Submittal Package(s)					X										X			X	X				
01 33 16	3.3.3	Design and Code Review Checklists					X										X			X	X				
01 33 16	A-2.0	SID - Interim and Final (as applicable)			X	X	X								X						X				
01 33 16	B-2.0	FFE (as Applicable)					X								X						X				
01 45 04.00 10	3.2	Design and Construction QC Plan	X														X				X				
01 57 20.00.10	1.2	Environmental Protection Plan	X														X				X				
01 78 02.00 10	1.2.1	Final as-Built Drawings											X		X										
01 78 02.00 10	1.2.3.11	Non-Hazardous Solid Waste Diversion Reports							X					X							X				
01 78 02.00 10	1.2.7	Provide final as-built CADD and BIM Model files											X		X						X				
01 78 02.00 10	1.2.9	Provide scans of all other docs in Adobe.pdf format											X		X						X				
01 78 02.00 10	1.3.1	Equip-in-Place list of all installed equip and cost											X		X						X				
01 78 02.00 10	1.3.2	Data on equip not addressed in O&M manuals											X		X						X				
01 78 02.00 10	1.3.3	Final as-built specs - electronic files											X		X						X				
01 78 02.00 10	1.4.2.1	Warranty management plan - FAR 52.246-21											X		X						X				
01 78 02.00 10	1.4.2.1	Certificates of Warranty for extended warranty items											X		X						X				
01 78 02.00 10	1.4.2.1	Contractor's POCs for implementing warranty process											X		X						X				
01 78 02.00 10	1.4.2.1	List of each warranted equip, item, feature or system											X		X						X				
01 78 02.00 10	1.5	See also Section 01 10 00 par. 5.8.4 and 5.8.5											X		X						X				
01 78 02.00 10	1.6.1.2	Equipment O&M Manuals - 1 electronic / 2 hard copies											X		X						X				
01 78 02.00 10	1.7	Field Training DVD Videos										X		X							X				
01 78 02.00 10	1.8	Pricing of CF/CI and GF/CI Property											X	X							X				
01 78 02.00 10	1.11	List of Completed Cleanup Items											X				X				X				

RMS INPUT FORM 4288A

Export to RMS in CSV(MS-DOS) (*.csv) Format

Note: Reviewing Office Optional

APPENDIX AA

ASBESTOS AND HAZARDOUS MATERIALS REPORT

US Army Corps of Engineers®

Savannah District
Environmental and Materials Unit

Asbestos Survey

Building No. 29703
Fort Gordon, Georgia

Prepared by Timothy A. Jones

The contents of this report are not to be used for advertising, publication, or promotional purposes. Citation of trade names does not constitute an official endorsement or approval of the use of such commercial products.

The findings of this report are not to be construed as an official Department of the Army position, unless so designated by other authorized documents.

Asbestos Survey **May 2010**

Building No. 29703
Fort Gordon, Georgia

Prepared by: Timothy A. Jones

Final report

Prepared for: **U.S. Army Corps of Engineers**
Savannah District

Asbestos Inspection Report 1-3

List of Tables

Table 1. Suspect ACM Samples 4-7

Table 2. ACM Quantity Summary 8

Table 3. Material Characterization and Assessment 9

List of Figures

Figure 1. Asbestos Sample Locations, First Floor 10

Figure 2. Asbestos Sample Locations, Second Floor 11

Figure 3. Asbestos Sample Locations, Third Floor 12

Figure 4. Asbestos Sample Locations, Basement & Crawlspace 13

Appendices

Appendix A. Carolina Environmental, Inc. 14-31

Appendix B. Sample Chain of Custody Forms ..... 32 - 36

Appendix C. Certifications and Accreditations ..... 37 - 40

Asbestos Inspection Report

Introduction

Scope of the Investigation

This report documents the asbestos inspection and survey of Building No. 29703 at Ft. Gordon; Georgia conducted on 26-27 May 2010 by Savannah District US Army Corps of Engineers employee Tim Jones. The survey was conducted in general accordance with the regulatory guidelines in the Asbestos Hazard Emergency Response Act (AHERA) (40 CFR Part 763 Subpart E Sections 763.80-763.88) and "Guidance for Controlling Asbestos-Containing Materials in Buildings" (Purple Book) (EPA publication number 560/5-85-024). Although not required by the AHERA guidelines, roof and other exterior miscellaneous materials were also inspected and sampled.

Background

Building 29703 is a three story masonry barracks building built in the 1960s. The floor systems are concrete typically covered with vinyl floor tiles. Original walls are mostly concrete block however some newer drywall walls have been added. Ceilings are typically suspended metal frame with ceiling tiles. Window systems are metal framed with no glazing putty used. The roof structures are concrete decking covered with insulation and single ply rubber membrane. Rooms on the building floor plans are arbitrarily numbered for identification in this report only.

Description of study

Investigation

All accessible areas of Building No. 29703 were visually inspected for suspected asbestos containing materials (ACM) by an accredited inspector. The rubber roofing membranes were not cut due to fear of leaks; therefore, older asbestos containing roofing materials may be present below the rubber. Thorough investigation of the roof systems should be performed prior to renovation or demolition. This report details ACM as identified at the time of inspection only.

Bulk samples of suspect ACM's were collected. The bulk samples were analyzed by Carolina Environmental, Inc. The laboratory is accredited by the National Voluntary Laboratory Accredited Program (NVLAP Accreditation sponsored by the National Institute of Standards and Technology (NIST)). A copy of their accreditation certificate is included in Appendix C. The samples were analyzed by the accepted method of polarized

light microscopy (PLM) using EPA's "Interim Method for Determining Asbestos in Insulation Samples", EPA-600/M4-82-020. The lab's analytical report is included in Appendix A.

In compliance with the AHERA regulations, material is considered an Asbestos Containing Material (ACM) when it contains greater than one percent asbestos. Likewise, in this report, any material containing concentrations greater than one percent asbestos will be considered "positive". Occasionally, materials containing less than one percent asbestos, or not sampled, are assumed to be a "positive" asbestos containing material at the discretion of the inspector. A narrative discussion of the AHERA ACM types (i.e., thermal systems insulation, miscellaneous and surfacing materials) found in Building No. 29703 is included in this report where relevant. Bulk sample information appears on Table 1. Estimated quantities of individual asbestos containing materials appear on Table 2. Material characterization of asbestos containing materials appears on Table 3. The approximate location where each bulk sample was obtained is shown on the building floor plans, which appear as Figures. Positive ACM samples are indicated on the floor plan Figures with their numbers enclosed in squares and, where possible, locations of positive ACM are identified. Samples testing negative for asbestos are indicated on the floor plan Figures with their numbers enclosed in circles. It is reasonable to assume that all materials similar to those testing positive also contain positive amounts of asbestos and should be treated as such.

Conclusions

Thermal Systems Insulation (TSI)

TSI is insulation material applied to pipes, fittings, tanks, ducts, or on other interior structural components to prevent heat loss or gain, or water condensation, or for other purposes.

White mastic on piping insulation in the crawlspace contains asbestos. White mastic on older looking metal banded domestic water piping insulation inside plumbing chase walls contains asbestos. Similar mastic expected to exist on piping above the hard ceiling in the Basement Mechanical Room is assumed to contain asbestos. - (Refer to Tables 1, 2 and 3 for specific information and Figures 1 & 4 for sample locations).

Miscellaneous Materials

Miscellaneous materials include building material on structural components, structural members or fixtures, such as floor and ceiling tiles, and do not include surfacing or TSI. In the past, there were a great number of miscellaneous building materials that had asbestos fibers added to them during the manufacturing process to increase durability and fireproofing qualities. The following suspect miscellaneous materials at Building No. 29703 were found to contain or were assumed to contain asbestos:

a. *Flooring Materials:* Typically two to three layers of floor tiles are located in the building. All floor tiles with the exception of the uppermost layers of 12” X 12” blue or grey tiles are assumed to contain asbestos. All black floor tile mastic contains asbestos. In general, all areas of the building with floor tiles contain asbestos containing floor tiles, mastic or both. - (Refer to Tables 1, 2 and 3 for specific information and Figures 1, 2 and 3 for sample locations).

b. *Black Pipe Wrap:* An abandoned steam header was located in one end of the crawlspace. It is wrapped with a black protective material that is assumed to contain asbestos. This header and wrapping continue underground to undetermined locations. - (Refer to Tables 2 and 3 for specific information and Figure 4 for header location).

c. *Black Mastic:* Black mastic on the concrete foundation walls in the crawlspace contains asbestos. This adhesive is used to attach plastic vapor barrier sheeting to the walls. Black mastic on the interior of the masonry end walls of the building contains asbestos (see sample 5 and 42 locations). This material may exist on other perimeter walls of the building behind newer interior finishes. - (Refer to Tables 1, 2 and 3 for specific information and Figures 1 and 3 for sample locations).

d. *Flange Gaskets:* Flange gaskets within mechanical piping systems are assumed to contain asbestos. - (Refer to Tables 2 and 3 for specific information).

Surfacing Material

Surfacing material is friable material that is sprayed on, troweled on, or otherwise applied to surfaces for decorative or other purposes.

No asbestos containing surfacing material was located within Building 29703.

TABLE 1
SUSPECT ACM SAMPLES
Ft. GORDON, BUILDING 29703

FIELD ID	DESCRIPTION	LOCATION	ASBESTOS TYPE & %
29703-1-1	Caulking material	Corridor Room 129, on fire damper through masonry wall above suspended ceiling	No Asbestos Detected
29703-1-2	White mastic	Corridor Room 139, on duct insulation above suspended ceiling	No Asbestos Detected
29703-1-3	Drywall joint compound	Room 135 ceiling	No Asbestos Detected
29703-1-4	Drywall joint compound	Room 134 wall	No Asbestos Detected
29703-1-5	**Black mastic**	**Room 136, coating inside of masonry exterior wall**	**5% chrysotile**
29703-1-6	12” X 12” blue/grey upper floor tile & yellow mastic	Corridor Room 139	No Asbestos Detected
29703-1-7	**White floor tile & black mastic**	**Corridor Room 139, middle layer**	**Mastic 5% chrysotile, tile NAD**
29703-1-8	**Black floor tile & black mastic**	**Corridor Room 139, lower layer**	**Tile 5% chrysotile, mastic 2% chrysotile**
29703-1-9	Ceiling plaster	Room 132	No Asbestos Detected
29703-1-10	Drywall joint compound	Room 138 wall	No Asbestos Detected
29703-1-11	White mastic	Room 130, on domestic water piping insulation	No Asbestos Detected
29703-1-12	Drywall joint compound	Room 140, stairwell ceiling	No Asbestos Detected
29703-1-13	12” X 12” grey floor tile & yellow mastic	Room 140, upper layer	No Asbestos Detected
29703-1-14	**Black floor tile & black mastic**	**Room 140, lower layer**	**Tile 2% chrysotile, mastic NAD**
29703-1-15	**12” X 12” white floor tile & black mastic**	**Room 128, upper layer**	**Tile 2% chrysotile, mastic 5% chrysotile**
29703-1-16	**Black floor tile & black mastic**	**Room 128, lower layer**	**Tile 2% chrysotile, mastic 5% chrysotile**
29703-1-17	Acoustic ceiling surfacing	Room 128	No Asbestos Detected
29703-1-18	Tan construction adhesive	Room 128 walls	No Asbestos Detected
29703-1-19	White mastic	Room 128, on HVAC piping insulation	No Asbestos Detected
29703-1-20	White mastic	Room 128, on duct insulation	No Asbestos Detected
29703-1-21	12” X 12” light blue floor tile & mastic	Room 127	No Asbestos Detected

29703-1-22	Drywall joint compound	Room 127 chase wall	No Asbestos Detected
29703-1-23	2’ X 2’ ceiling tile	Corridor Room 126	No Asbestos Detected
29703-1-24	Drywall joint compound	Room 143 wall	No Asbestos Detected
29703-1-25	12” X 12” grey floor tile & yellow mastic	Room 143, upper layer	No Asbestos Detected
29703-1-26	12” X 12” white floor tile & yellow mastic	Room 143, middle layer	No Asbestos Detected
29703-1-27	**White floor tile & black mastic**	**Room 143, lower layer**	**Mastic 5% chrysotile, tile NAD**
29703-1-28	**White mastic**	**Room 144, inside plumbing chase wall, on older looking domestic water piping insulation**	**2% chrysotile**
29703-1-29	White duct sealer	Room 144, inside plumbing chase wall on bare metal duct	No Asbestos Detected
29703-1-30	Caulking material	Room 119, on fire damper through masonry wall above suspended ceiling	No Asbestos Detected
29703-1-31	Drywall joint compound	Room 112 wall	No Asbestos Detected
29703-1-32	Acoustic ceiling surfacing	Room 108	No Asbestos Detected
29703-1-33	White mastic	Room 108, on HVAC piping insulation	No Asbestos Detected
29703-1-34	White mastic	Room 108, on duct insulation	No Asbestos Detected
29703-1-35	Drywall joint compound	Room 148 wall	No Asbestos Detected
29703-1-36	**12” X 12” white floor tile & black mastic**	**Room 101, middle layer**	**Tile 3% chrysotile, mastic 5% chrysotile**
29703-1-37	**White floor tile & black mastic**	**Room 101, lower layer**	**Mastic 5% chrysotile, tile NAD**
29703-3-38	12” X 12” grey floor tile & yellow mastic	Corridor Room 353, upper layer	No Asbestos Detected
29703-3-39	**White floor tile & black mastic**	**Corridor Room 353, middle layer**	**Mastic 5% chrysotile, tile NAD**
29703-3-40	**White floor tile & mastic**	**Corridor Room 353, lower layer**	**Mastic 5% chrysotile, tile NAD**
29703-3-41	Drywall joint compound	Room 301 wall	No Asbestos Detected
29703-3-42	**Black mastic**	**Room 301, coating inside of masonry exterior wall**	**5% chrysotile**
29703-3-43	White mastic	Corridor Room 353, on duct insulation above suspended ceiling	No Asbestos Detected
29703-3-44	2’ X 2’ ceiling tile	Corridor Room 353	No Asbestos Detected
29703-3-45	Vinyl base molding & adhesive	Corridor Room 349	No Asbestos Detected
29703-3-46	Drywall joint compound	Room 323 wall	No Asbestos Detected

29703-3-47	White mastic	Room 323, on HVAC piping insulation	No Asbestos Detected
29703-3-48	White mastic	Room 323, on duct insulation	No Asbestos Detected
29703-3-49	**12” X 12” white floor tile & black mastic**	**Room 326, middle layer**	**Mastic 5% chrysotile, tile NAD**
29703-3-50	**Black 9” X 9” floor tile & black mastic**	**Room 326, lower layer**	**Tile 5% chrysotile, mastic 5% chrysotile**
29703-3-51	Drywall joint compound	Room 333, stairwell ceiling	<1% chrysotile
29703-3-52	Caulking material	Room 333, at corner of masonry wall	No Asbestos Detected
29703-2-53	Acoustic ceiling surfacing	Room 224	No Asbestos Detected
29703-2-54	Vinyl base molding & adhesive	Corridor Room 233	No Asbestos Detected
29703-2-55	White mastic	Room 225, on domestic water piping insulation	No Asbestos Detected
29703-2-56	**12” X 12” white floor tile & black mastic**	**Corridor Room 233, middle layer**	**Mastic 5% chrysotile, tile NAD**
29703-2-57	**White floor tile & black mastic**	**Corridor Room 233, lower layer**	**Mastic 5% chrysotile, tile NAD**
29703-2-58	12” X 12” white with grey floor tile & mastic	Room 228	No Asbestos Detected
29703-2-59	12” X 12” white with grey floor tile & mastic	Room 228	No Asbestos Detected
29703-2-60	Drywall joint compound	Room 228 wall	No Asbestos Detected
29703-E-61	Black rubbery caulking material	Exterior, between metal window frame and masonry wall	No Asbestos Detected
29703-E-62	Black rubbery caulking material	Exterior, between metal window frame and masonry wall	No Asbestos Detected
29703-E-63	White rubbery caulking material	Exterior, between metal door frame and masonry wall	No Asbestos Detected
29703-E-64	Tan rubbery caulking material	Exterior, in masonry wall expansion joint	No Asbestos Detected
29703-E-65	Tan rubbery caulking material	Exterior, in masonry wall expansion joint	No Asbestos Detected
29703-E-66	Black mastic	Exterior, on masonry wall below grade	No Asbestos Detected
29703-E-67	White rubbery caulking material	Exterior, between metal door frame and masonry wall	No Asbestos Detected
29703-M-68	White mastic	Basement Mechanical Room, on domestic hot water storage tank insulation	No Asbestos Detected
29703-M-69	White mastic	Basement Mechanical Room, on HVAC piping insulation	No Asbestos Detected

29703-M-70	White mastic	Basement Mechanical Room, on HVAC piping insulation	No Asbestos Detected
29703-M-71	Ceiling plaster	Basement Mechanical Room	No Asbestos Detected
29703-C-72	**White mastic**	**Crawlspace, on abandoned domestic water piping insulation on ground**	**2% chrysotile**
29703-C-73	**White mastic**	**Crawlspace, on domestic water piping insulation still in use**	**2% chrysotile**
29703-C-74	**White mastic**	**Crawlspace, on domestic water piping insulation still in use**	**2% chrysotile**
29703-C-75	**Black mastic**	**Crawlspace, on lower portion of foundation walls**	**5% chrysotile**
29703-C-76	Black mastic	Crawlspace, over foam glass insulation on HVAC piping	No Asbestos Detected
29703-C-77	Black mastic	Crawlspace, over foam glass insulation on HVAC piping	No Asbestos Detected

Samples testing positive for asbestos indicated in **BOLD** type

NAD = No Asbestos Detected

TABLE 2
ACM QUANTITY SUMMARY
Ft. GORDON, BUILDING 29703

Homogeneous Area	UNITS	Functional Space										
		INTERIOR	EXTERIOR	PLUMBING CHASE WALLS	CRAWLSPACE	BASEMENT MECHANICAL ROOM, ABOVE HARD CEILING						TOTALS
ACM Floor Tiles & Mastic	S.F.	32,600										32,600
White Mastic On Pipe Insulation	S.F			100	250	25						375
Black Pipe Wrap	S.F.				5							5
Black Adhesive on Foundation Wall	S.F.				2000							2000
Black Mastic On Interior Masonry Walls	S.F.	2400										2400
Flange Gaskets	Ea.					50						50

S.F. = Square Foot, L.F. = Linear Foot, C.F. = Cubic Foot, Ea. = Each

TABLE 3
MATERIAL CHARACTERIZATION AND ASSESSMENT
Ft. GORDON, BUILDING 29703

MATERIAL		CHARACTERISTICS			ASSESSMENT	
Type	**Description**	**Asbestos Yes/No/Assumed**	**Quantity**	**Friable / Non-friable**	**Condition**	**Disturbance Potential**
Miscellaneous	ACM Floor Tiles & Mastic	Yes	32,600 S.F.	Non-friable	Good	Low
TSI	White Mastic On Pipe Insulation	Yes	375 S.F.	Non-Friable	Damaged	Low
Miscellaneous	Black Pipe Wrap	Assumed	5 S.F.	Non-Friable	Good	Low
Miscellaneous	Black Adhesive on Foundation Wall	Yes	2000 S.F.	Non-Friable	Good	Low
Miscellaneous	Black Mastic On Interior Masonry Walls	Yes	2400 S.F.	Non-Friable	Good	Low
Miscellaneous	Flange Gaskets	Assumed	50 Ea.	Non-Friable	Good	Low

S.F. = Square Foot, L.F. = Linear Foot, C.F. = Cubic Foot, Ea. = Each

Figure 1

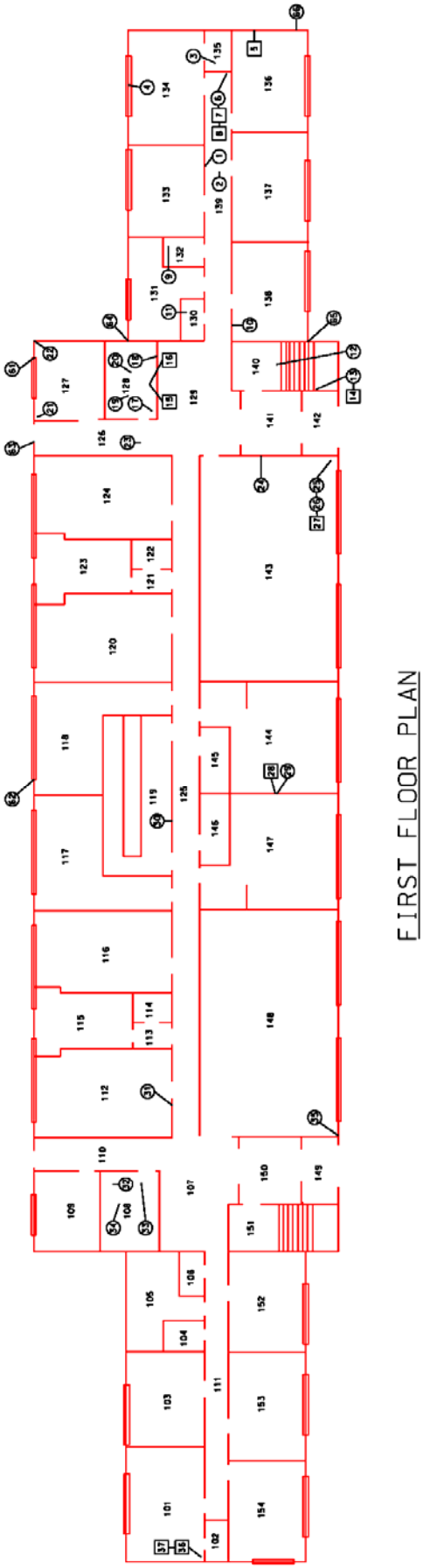

Figure 2

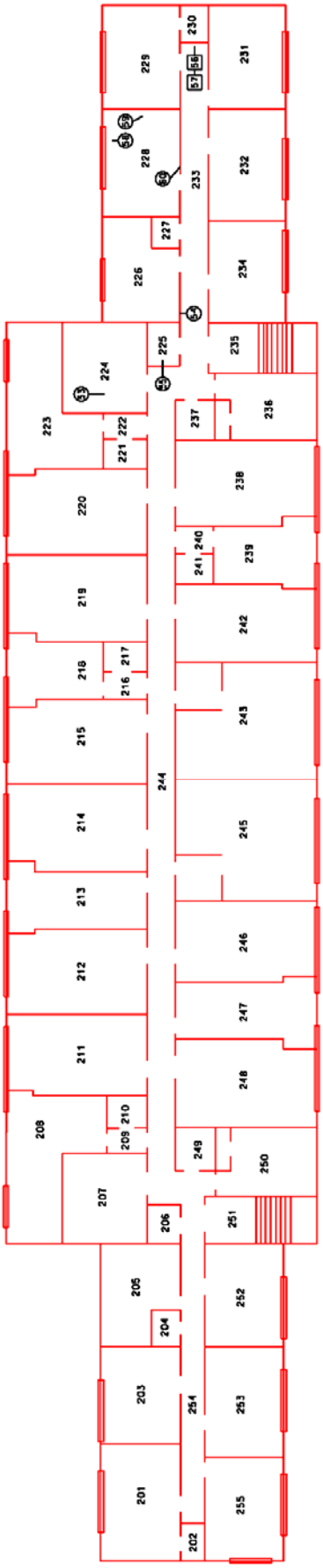

SECOND FLOOR PLAN

Figure 3

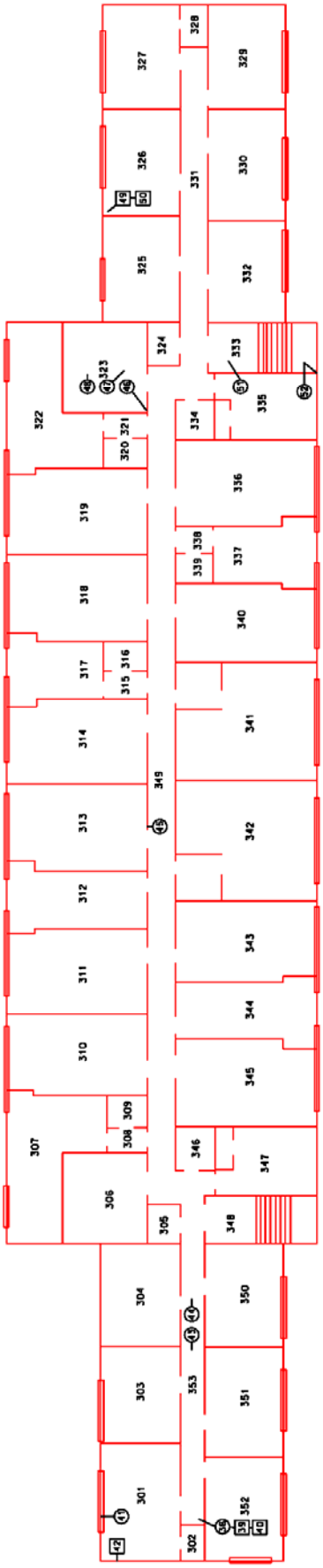

THIRD FLOOR PLAN

Figure 4

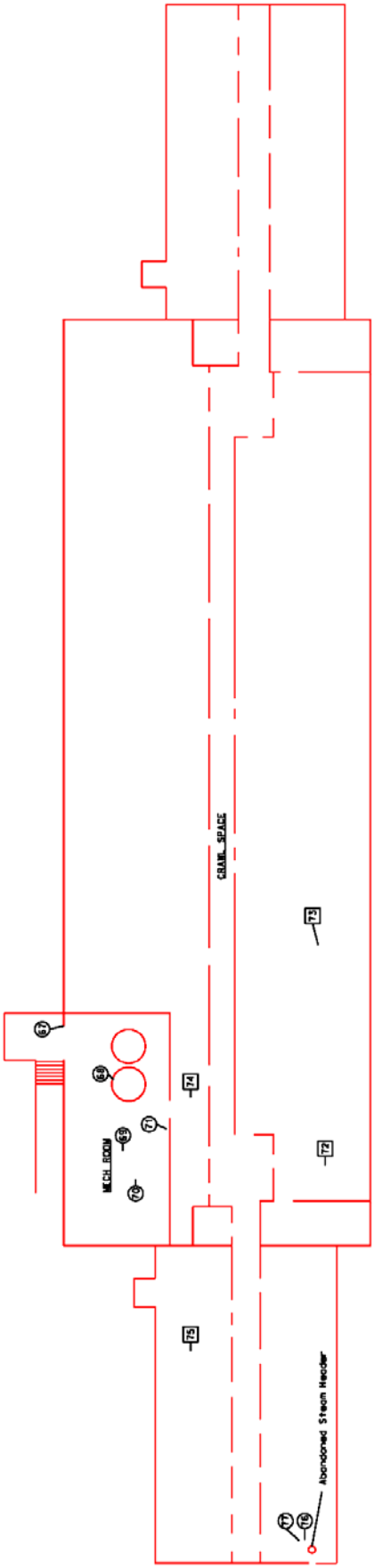

BASEMENT

Appendix A

Analytical Report, Carolina Environmental, Inc.

CAROLINA ENVIRONMENTAL, INC.
107 New Edition Court, Cary, NC 27511
Phone: (919) 481-1413 Fax: (919) 481-1442

LABORATORY REPORT
ASBESTOS BULK ANALYSIS

Client: **US Army Corps of Engineers - Savannah District - EMU9**
200 North Cobb Parkway, Bldg. 400 Ste. 404
Marietta, GA 30062

Project: Ft. Gordon Bldg. 29703; 10316

CEI Lab Code: A10-4756
Received: 06-10-10
Analyzed: 06-14-10
Reported: 06-14-10
Analyst: Ashley Miller

CLIENT ID	CEI LAB ID	HOMOGENEITY DESCRIPTION	% ASBESTOS
29703-1-1	A1031563	CAULKING Heterogeneous, White, Non-fibrous, Bound CAULK 100 % CELL <1 %	ND
29703-1-2	A1031564	WHITE MASTIC Heterogeneous, White, Non-fibrous, Bound BIND 100 % CELL <1 % WOLL <1 %	ND
29703-1-3	A1031565	DRYWALL JOINT COMPOUND Heterogeneous, White, Fibrous, Bound GYPSUM 85 % CELL 5 % PLAS 5 % FBGL <1 % PAINT 5 %	ND
29703-1-4	A1031566	DRYWALL JOINT COMPOUND Heterogeneous, White, Fibrous, Bound GYPSUM 85 % CELL 5 % PLAS 5 % FBGL <1 % PAINT 5 %	ND
29703-1-5	A1031567	MASTIC Homogeneous, Black, Fibrous, Bound CHRY 5% MAST 95 % CELL <1 %	CHRY 5%
29703-1-6	A1031568A	FLOOR TILE Homogeneous, Grey, Non-fibrous, Bound VINYL 100 % CELL <1 %	ND

CAROLINA ENVIRONMENTAL, INC.
107 New Edition Court, Cary, NC 27511
Phone: 919-481-1413 Fax: 919-481-1442

Project: Ft. Gordon Bldg. 29703; 10316

Lab Code: A10-4756

CLIENT ID	CEI LAB ID	HOMOGENEITY DESCRIPTION	% ASBESTOS
	A1031568B Homogeneous,	MASTIC Yellow, Non-fibrous, Bound MAST 100 % CELL <1 %	ND
29703-1-7	A1031569A Homogeneous,	CARPET MASTIC Yellow, Non-fibrous, Bound MAST 100 % CELL <1 %	ND
	A1031569B Homogeneous,	FLOOR TILE Off-white, Non-fibrous, Bound VINYL 100 % CELL <1 %	ND
	A1031569C Homogeneous,	MASTIC Black, Fibrous, Bound CHRY 5% MAST 95 % CELL <1 %	CHRY 5%
29703-1-8	A1031570A Homogeneous,	FLOOR TILE Black, Fibrous, Bound CHRY 5% VINYL 95 % CELL <1 %	CHRY 5%
	A1031570B Homogeneous,	MASTIC Black, Fibrous, Bound CHRY 2% MAST 95 % CELL 3 %	CHRY 2%
29703-1-9	A1031571A Heterogeneous,	PLASTER SKIM COAT White, Non-fibrous, Bound PLAS 95 % CELL <1 % PAINT 5 %	ND

CAROLINA ENVIRONMENTAL, INC.
107 New Edition Court, Cary, NC 27511
Phone: 919-481-1413 Fax: 919-481-1442

Project: Ft. Gordon Bldg. 29703; 10316

Lab Code: A10-4756

CLIENT ID	CEI LAB ID	HOMOGENEITY DESCRIPTION	% ASBESTOS
	A1031571B	PLASTER BASE COAT	ND
	Homogeneous,	Tan, Non-fibrous, Bound	
		PLAS 100 % CELL <1 %	
29703-1-10	A1031572	DRYWALL JOINT COMPOUND	ND
	Heterogeneous,	White, Non-fibrous, Bound	
		PLAS 95 % CELL <1 %	
		PAINT 5 %	
29703-1-11	A1031573	WHITE MASTIC	ND
	Heterogeneous,	White, Non-fibrous, Bound	
		BIND 100 % CELL <1 %	
		WOLL <1 %	
29703-1-12	A1031574	DRYWALL JOINT COMPOUND	ND
	Heterogeneous,	White, Fibrous, Bound	
		GYPSUM 85 % CELL 5 %	
		PLAS 5 % FBGL <1 %	
		PAINT 5 %	
29703-1-13	A1031575A	FLOOR TILE	ND
	Homogeneous,	Grey, Non-fibrous, Bound	
		VINYL 100 % CELL <1 %	
	A1031575B	MASTIC	ND
	Homogeneous,	Yellow, Non-fibrous, Bound	
		MAST 100 % CELL <1 %	
29703-1-14	A1031576A	FLOOR TILE	CHRY 2%
	Homogeneous,	Black, Fibrous, Bound	
		CHRY 2% VINYL 95 % CELL 3 %	

CAROLINA ENVIRONMENTAL, INC.
107 New Edition Court, Cary, NC 27511
Phone: 919-481-1413 Fax: 919-481-1442

Project: Ft. Gordon Bldg. 29703; 10316

Lab Code: A10-4756

CLIENT ID	CEI LAB ID	HOMOGENEITY DESCRIPTION	% ASBESTOS
	A1031576B Homogeneous,	MASTIC Yellow, Non-fibrous, Bound MAST 100 % CELL <1 %	ND
29703-1-15	A1031577A Homogeneous,	FLOOR TILE Off-white, Fibrous, Bound CHRY 2% VINYL 98 % CELL <1 %	CHRY 2%
	A1031577B Homogeneous,	MASTIC Black, Fibrous, Bound CHRY 5% MAST 95 % CELL <1 %	CHRY 5%
29703-1-16	A1031578A Homogeneous,	FLOOR TILE Black, Fibrous, Bound CHRY 2% VINYL 98 % CELL <1 %	CHRY 2%
	A1031578B Homogeneous,	MASTIC Black, Fibrous, Bound CHRY 5% MAST 95 % CELL <1 %	CHRY 5%
29703-1-17	A1031579 Homogeneous,	ACOUTIC CEILING SURFACE Black, Fibrous, Loosely Bound BIND 10 % CELL 90 %	ND
29703-1-18	A1031580 Homogeneous,	CONSTRUCTION ADHESIVE Tan, Non-fibrous, Bound MAST 100 % CELL <1 %	ND

CAROLINA ENVIRONMENTAL, INC.
107 New Edition Court, Cary, NC 27511
Phone: 919-481-1413 Fax: 919-481-1442

Project: Ft. Gordon Bldg. 29703; 10316

Lab Code: A10-4756

CLIENT ID	CEI LAB ID	HOMOGENEITY DESCRIPTION	% ASBESTOS
29703-1-19	A1031581	WHITE MASTIC Heterogeneous, White, Non-fibrous, Bound BIND 100 % CELL <1 % WOLL <1 %	ND
29703-1-20	A1031582	WHITE MASTIC Heterogeneous, White, Non-fibrous, Bound BIND 100 % CELL <1 % WOLL <1 %	ND
29703-1-21	A1031583A	FLOOR TILE Homogeneous, Off-white, Non-fibrous, Bound VINYL 100 % CELL <1 %	ND
	A1031583B	MASTIC Homogeneous, Yellow, Non-fibrous, Bound MAST 100 % CELL <1 %	ND
29703-1-22	A1031584	DRYWALL JOINT COMPOUND Heterogeneous, White, Non-fibrous, Bound PLAS 95 % CELL <1 % PAINT 5 %	ND
29703-1-23	A1031585	CEILING TILE Heterogeneous, White, Tan, Fibrous, Loosely Bound PERL 20 % CELL 60 % PAINT 5 % FBGL 15 %	ND
29703-1-24	A1031586	DRYWALL JOINT COMPOUND Heterogeneous, White, Non-fibrous, Bound PLAS 95 % CELL <1 % PAINT 5 %	ND

CAROLINA ENVIRONMENTAL, INC.
107 New Edition Court, Cary, NC 27511
Phone: 919-481-1413 Fax: 919-481-1442

Project: Ft. Gordon Bldg. 29703; 10316

Lab Code: A10-4756

CLIENT ID	CEI LAB ID	HOMOGENEITY DESCRIPTION	% ASBESTOS
29703-1-25	A1031587A Homogeneous,	FLOOR TILE Off-white, Non-fibrous, Bound VINYL 100 % CELL <1 %	ND
	A1031587B Homogeneous,	MASTIC Yellow, Non-fibrous, Bound MAST 100 % CELL <1 %	ND
29703-1-26	A1031588A Homogeneous,	FLOOR TILE Off-white, Non-fibrous, Bound VINYL 100 % CELL <1 %	ND
	A1031588B Homogeneous,	MASTIC Yellow, Non-fibrous, Bound MAST 100 % CELL <1 %	ND
29703-1-27	A1031589A Homogeneous,	MASTIC Yellow, Non-fibrous, Bound MAST 100 % CELL <1 %	ND
	A1031589B Homogeneous,	FLOOR TILE Beige, Non-fibrous, Bound VINYL 100 % CELL <1 %	ND
	A1031589C Homogeneous,	MASTIC Black, Fibrous, Bound CHRY 5% VINYL 95 % CELL <1 %	CHRY 5%

CAROLINA ENVIRONMENTAL, INC.
107 New Edition Court, Cary, NC 27511
Phone: 919-481-1413 Fax: 919-481-1442

Project: Ft. Gordon Bldg. 29703; 10316

Lab Code: A10-4756

CLIENT ID	CEI LAB ID	HOMOGENEITY DESCRIPTION	% ASBESTOS
29703-1-28	A1031590	WHITE MASTIC Heterogeneous, White, Fibrous, Bound CHRY 2% BIND 98 % CELL <1 % WOLL <1 %	CHRY 2%
29703-1-29	A1031591	WHITE MASTIC Heterogeneous, White, Fibrous, Bound BIND 100 % CELL <1 % WOLL <1 %	ND
29703-1-30	A1031592	CAULKING Homogeneous, Off-white, Non-fibrous, Bound CAULK 100 % CELL <1 %	ND
29703-1-31	A1031593	DRYWALL JOINT COMPOUND Heterogeneous, White, Non-fibrous, Bound PLAS 95 % CELL <1 % PAINT 5 %	ND
29703-1-32	A1031594	ACOUTIC CEILING SURFACE Homogeneous, Black, Fibrous, Loosely Bound BIND 10 % CELL 90 %	ND
29703-1-33	A1031595	WHITE MASTIC Heterogeneous, White, Fibrous, Bound BIND 100 % CELL <1 % WOLL <1 %	ND
29703-1-34	A1031596	WHITE MASTIC Heterogeneous, White, Fibrous, Bound BIND 100 % CELL <1 % WOLL <1 %	ND

CAROLINA ENVIRONMENTAL, INC.
107 New Edition Court, Cary, NC 27511
Phone: 919-481-1413 Fax: 919-481-1442

Project: Ft. Gordon Bldg. 29703; 10316

Lab Code: A10-4756

CLIENT ID	CEI LAB ID	HOMOGENEITY DESCRIPTION	% ASBESTOS
29703-1-35	A1031597 Heterogeneous,	DRYWALL JOINT COMPOUND White, Non-fibrous, Bound PLAS 95 % CELL <1 % PAINT 5 %	ND
29703-1-36	A1031598A Homogeneous,	FLOOR TILE Off-white, Fibrous, Bound CHRY 3% VINYL 97 % CELL <1 %	CHRY 3%
	A1031598B Homogeneous,	MASTIC Black, Fibrous, Bound CHRY 5% MAST 95 % CELL <1 %	CHRY 5%
29703-1-37	A1031599A Homogeneous,	FLOOR TILE White, Non-fibrous, Bound VINYL 100 % CELL <1 %	ND
	A1031599B Homogeneous,	MASTIC Black, Fibrous, Bound CHRY 5% MAST 95 % CELL <1 %	CHRY 5%
29703-3-38	A1031600A Homogeneous,	FLOOR TILE Blue, Non-fibrous, Bound VINYL 100 % CELL <1 %	ND
	A1031600B Homogeneous,	MASTIC Yellow, Non-fibrous, Bound MAST 100 % CELL <1 %	ND

CAROLINA ENVIRONMENTAL, INC.
107 New Edition Court, Cary, NC 27511
Phone: 919-481-1413 Fax: 919-481-1442

Project: Ft. Gordon Bldg. 29703; 10316

Lab Code: A10-4756

CLIENT ID	CEI LAB ID	HOMOGENEITY DESCRIPTION	% ASBESTOS
29703-3-39	A1031601A Homogeneous,	MASTIC Yellow, Non-fibrous, Bound MAST 100 % CELL <1 %	ND
	A1031601B Homogeneous,	FLOOR TILE Off-white, Non-fibrous, Bound VINYL 100 % CELL <1 %	ND
	A1031601C Homogeneous,	MASTIC Black, Fibrous, Bound CHRY 5% MAST 95 % CELL <1 %	CHRY 5%
29703-3-40	A1031602A Homogeneous,	FLOOR TILE Off-white, Non-fibrous, Bound VINYL 100 % CELL <1 %	ND
	A1031602B Homogeneous,	MASTIC Black, Fibrous, Bound CHRY 5% MAST 95 % CELL <1 %	CHRY 5%
29703-3-41	A1031603 Heterogeneous,	DRYWALL JOINT COMPOUND White, Non-fibrous, Bound PLAS 95 % CELL <1 % PAINT 5 %	ND
29703-3-42	A1031604 Homogeneous,	MASTIC Black, Fibrous, Bound CHRY 5% MAST 95 % CELL <1 %	CHRY 5%

CAROLINA ENVIRONMENTAL, INC.
107 New Edition Court, Cary, NC 27511
Phone: 919-481-1413 Fax: 919-481-1442

Project: Ft. Gordon Bldg. 29703; 10316

Lab Code: A10-4756

CLIENT ID	CEI LAB ID	HOMOGENEITY DESCRIPTION	% ASBESTOS
29703-3-43	A1031605	WHITE MASTIC Heterogeneous, White, Fibrous, Bound BIND 100 % CELL <1 % WOLL <1 %	ND
29703-3-44	A1031606	CEILING TILE Heterogeneous, White, Tan, Fibrous, Loosely Bound PERL 20 % CELL 65 % PAINT 5 % FBGL 15 %	ND
29703-3-45	A1031607A	BASE MOLDING Homogeneous, Black, Non-fibrous, Bound VINYL 100 % CELL <1 %	ND
	A1031607B	MASTIC Homogeneous, Yellow, Non-fibrous, Bound MAST 100 % CELL <1 %	ND
29703-3-46	A1031608	DRYWALL JOINT COMPOUND Heterogeneous, White, Non-fibrous, Bound PLAS 95 % CELL <1 % PAINT 5 %	ND
29703-3-47	A1031609	WHITE MASTIC Heterogeneous, White, Fibrous, Bound BIND 100 % CELL <1 % WOLL <1 %	ND
29703-3-48	A1031610	WHITE MASTIC Heterogeneous, White, Fibrous, Bound BIND 100 % CELL <1 % WOLL <1 %	ND

CAROLINA ENVIRONMENTAL, INC.
107 New Edition Court, Cary, NC 27511
Phone: 919-481-1413 Fax: 919-481-1442

Project: Ft. Gordon Bldg. 29703; 10316

Lab Code: A10-4756

CLIENT ID	CEI LAB ID	HOMOGENEITY DESCRIPTION	% ASBESTOS
29703-3-49	A1031611A Homogeneous,	FLOOR TILE White, Non-fibrous, Bound VINYL 100 % CELL <1 %	ND
	A1031611B Homogeneous,	MASTIC Black, Fibrous, Bound CHRY 5% MAST 95 % CELL <1 %	CHRY 5%
29703-3-50	A1031612A Homogeneous,	FLOOR TILE Black, Fibrous, Bound CHRY 5% VINYL 95 % CELL <1 %	CHRY 5%
	A1031612B Homogeneous,	MASTIC Black, Fibrous, Bound CHRY 5% MAST 95 % CELL <1 %	CHRY 5%
29703-3-51	A1031613 Heterogeneous,	DRYWALL JOINT COMPOUND White, Fibrous, Bound CHRY <1% PLAS 95 % CELL <1 % PAINT 5 %	CHRY <1%
29703-3-52	A1031614 Heterogeneous,	CAULKING White, Non-fibrous, Bound CAULK 95 % CELL <1 % PAINT 5 %	ND
29703-2-53	A1031615 Homogeneous,	ACOUSTIC CEILING SURFACING White, Fibrous, Loosely Bound BIND 10 % CELL 90 %	ND

CAROLINA ENVIRONMENTAL, INC.
107 New Edition Court, Cary, NC 27511
Phone: 919-481-1413 Fax: 919-481-1442

Project: Ft. Gordon Bldg. 29703; 10316

Lab Code: A10-4756

CLIENT ID	CEI LAB ID	HOMOGENEITY DESCRIPTION	% ASBESTOS
29703-2-54	A1031616A Homogeneous,	BASE MOLDING Black, Non-fibrous, Bound VINYL 100 % CELL <1 %	ND
	A1031616B Homogeneous,	MASTIC Brown, Non-fibrous, Bound MAST 100 % CELL <1 %	ND
29703-2-55	A1031617 Homogeneous,	WHITE MASTIC White, Non-fibrous, Bound MAST 100 % CELL <1 % WOLL <1 %	ND
29703-2-56	A1031618A Homogeneous,	CARPET MASTIC Yellow, Non-fibrous, Bound MAST 100 % CELL <1 %	ND
	A1031618B Homogeneous,	FLOOR TILE Off-white, Non-fibrous, Bound VINYL 100 % CELL <1 %	ND
	A1031618C Homogeneous,	MASTIC Black, Fibrous, Bound CHRY 5% MAST 95 % CELL <1 %	CHRY 5%
29703-2-57	A1031619A Homogeneous,	FLOOR TILE Off-white, Non-fibrous, Bound VINYL 100 % CELL <1 %	ND

CAROLINA ENVIRONMENTAL, INC.
107 New Edition Court, Cary, NC 27511
Phone: 919-481-1413 Fax: 919-481-1442

Project: Ft. Gordon Bldg. 29703; 10316

Lab Code: A10-4756

CLIENT ID	CEI LAB ID	HOMOGENEITY DESCRIPTION	% ASBESTOS
	A1031619B Homogeneous,	MASTIC Black, Fibrous, Bound CHRY 5% MAST 95 % CELL <1 %	CHRY 5%
29703-2-58	A1031620A Homogeneous,	FLOOR TILE Off-white, Non-fibrous, Bound VINYL 100 % CELL <1 %	ND
	A1031620B Homogeneous,	MASTIC Yellow, Non-fibrous, Bound MAST 100 % CELL <1 %	ND
29703-2-59	A1031621A Homogeneous,	FLOOR TILE Off-white, Non-fibrous, Bound VINYL 100 % CELL <1 %	ND
	A1031621B Homogeneous,	MASTIC Yellow, Non-fibrous, Bound MAST 100 % CELL <1 %	ND
29703-2-60	A1031622 Heterogeneous,	DRYWALL JOINT COMPOUND White, Non-fibrous, Bound PLAS 95 % CELL <1 % PAINT 5 %	ND
29703-E-61	A1031623 Homogeneous,	CAULKING Black, Fibrous, Bound CAULK 95 % CELL 5 %	ND

CAROLINA ENVIRONMENTAL, INC.
107 New Edition Court, Cary, NC 27511
Phone: 919-481-1413 Fax: 919-481-1442

Project: Ft. Gordon Bldg. 29703; 10316

Lab Code: A10-4756

CLIENT ID	CEI LAB ID	HOMOGENEITY DESCRIPTION	% ASBESTOS
29703-E-62	A1031624	CAULKING Homogeneous, Black, Fibrous, Bound CAULK 95 % CELL 5 %	ND
29703-E-63	A1031625	CAULKING Heterogeneous, Black, Fibrous, Bound CAULK 95 % CELL 5 % PAINT <1 %	ND
29703-E-64	A1031626	CAULKING Heterogeneous, Grey, Fibrous, Bound CAULK 95 % CELL <1 % PAINT 5 %	ND
29703-E-65	A1031627	CAULKING Heterogeneous, Grey, Fibrous, Bound CAULK 95 % CELL <1 % PAINT 5 %	ND
29703-E-66	A1031628	MASTIC Homogeneous, Black, Non-fibrous, Bound MAST 100 % CELL <1 %	ND
29703-E-67	A1031629	CAULKING Heterogeneous, Grey, Non-fibrous, Bound CAULK 100 % CELL <1 % PAINT <1 %	ND
29703-M-68	A1031630	WHITE MASTIC Homogeneous, White, Non-fibrous, Bound MAST 100 % CELL <1 % WOLL <1 %	ND

CAROLINA ENVIRONMENTAL, INC.
107 New Edition Court, Cary, NC 27511
Phone: 919-481-1413 Fax: 919-481-1442

Project: Ft. Gordon Bldg. 29703; 10316

Lab Code: A10-4756

CLIENT ID	CEI LAB ID	HOMOGENEITY DESCRIPTION	% ASBESTOS
29703-M-69	A1031631	WHITE MASTIC Homogeneous, White, Non-fibrous, Bound MAST 100 % CELL <1 % WOLL <1 %	ND
29703-M-70	A1031632	WHITE MASTIC Homogeneous, White, Non-fibrous, Bound MAST 100 % CELL <1 % WOLL <1 %	ND
29703-M-71	A1031633	PLASTER Heterogeneous, Tan, Non-fibrous, Tightly Bound PLAS 100 % CELL <1 % PAINT <1 %	ND
29703-C-72	A1031634	WHITE MASTIC Heterogeneous, White, Fibrous, Bound CHRY 2% BIND 98 % CELL <1 % WOLL <1 %	CHRY 2%
29703-C-73	A1031635	WHITE MASTIC Heterogeneous, White, Fibrous, Bound CHRY 2% BIND 98 % CELL <1 % WOLL <1 %	CHRY 2%
29703-C-74	A1031636	WHITE MASTIC Heterogeneous, White, Fibrous, Bound CHRY 2% BIND 98 % CELL <1 % WOLL <1 %	CHRY 2%
29703-C-75	A1031637	MASTIC Homogeneous, Black, Fibrous, Bound CHRY 5% MAST 95 % CELL <1 %	CHRY 5%

CAROLINA ENVIRONMENTAL, INC.
107 New Edition Court, Cary, NC 27511
Phone: 919-481-1413 Fax: 919-481-1442

Project: Ft. Gordon Bldg. 29703; 10316

Lab Code: A10-4756

CLIENT ID	CEI LAB ID	HOMOGENEITY DESCRIPTION	% ASBESTOS
29703-C-76	A1031638	MASTIC Homogeneous, Black, Fibrous, Bound MAST 95 % CELL 5 % SYNT <1 %	ND
29703-C-77	A1031639	MASTIC Homogeneous, Black, Fibrous, Bound MAST 95 % CELL 5 % SYNT <1 %	ND

The following definitions apply to the abbreviations used in the ASBESTOS BULK ANALYSIS REPORT:

CHRY = Chrysotile	CELL = Cellulose	DEBR = Debris
AMOS = Amosite	FBGL = Fibrous Glass	BIND = Binder
CROC = Crocidolite	CACO = Calcium Carbonate	SILI = Silicates
TREM = Tremolite	SYNT = Synthetics	GRAV = Gravel
ANTH = Anthophyllite	WOLL = Wollastonite	MAST = Mastic
ACTN = Actinolite	CERWL = Ceramic Wool	PLAS = Plaster
N D = None Detected	NTREM = Non-Asbestiform Tremolite	PERL = Perlite
NANTH = Non-Asbestiform Anthophyllite	FBGY = Fibrous Gypsum	RUBR =Rubber
		VER =Vermiculite

CLIENT: US Army Corps of Engineers - Savannah District - EMU9

PROJECT: Ft. Gordon Bldg. 29703; 10316

CEI LAB CODE: A10-4756

Stereoscopic microscopy and polarized light microscopy coupled with dispersion staining is the analytical technique used for sample identification. The percentage of each component is visually estimated by volume. These results pertain only to the samples analyzed. The samples were analyzed as submitted by the client and may not be representative of the larger material in question. Unless notified in writing to return samples, Carolina Environmental, Inc. will discard all bulk samples after 30 days.

Many vinyl floor tiles have been manufactured using greater than 1% asbestos. Often the asbestos was milled to a fiber size below the detection limit of polarized light microscopy. Therefore, a "None Detected" (ND) reading on vinyl floor tile does not necessarily exclude the presence of asbestos. Transmission electron microscopy provides a more conclusive form of analysis for vinyl floor tiles.

It is certified by the signature below that Carolina Environmental, Inc. is accredited by the National Voluntary Accreditation Program (NVLAP) for the analysis of asbestos in bulk materials. The accredited test method is EPA / 600 / M4-82 / 020 for the analysis of asbestos in building materials. Procedures described in EPA / 600 / R-93 / 116 have been incorporated where applicable. The detection limit for the method is 0.1% (trace amount). Carolina Environmental, Inc.'s NVLAP accreditation number is #101768-0. This report is not to be used to claim product endorsement by NVLAP or any agency of the U. S. Government. This report and its contents are only valid when reproduced in full. Dust and soil analyses for asbestos using PLM are not covered under NVLAP accreditation.

ANALYST Ashley Miller

REVIEWED BY Tianbao Bai

Tianbao Bai, Ph.D.
Laboratory Director

End of Report

Appendix B

Sample Chain of Custody Forms

A10.4756 (77)
A1031563 A1031639

ASBESTOS CHAIN OF CUSTODY - US ARMY CORPS OF ENGINEERS

Project:	**Ft. Gordon Bldg 29703**	Job No.:	**10316**
Sampler:	Tim Jones	Analysis:	PLM

DATE	FIELD ID	EMU ID	COMPONENTS/NOTES
5/26/2010	29703-1-1	64425	Caulking material
5/26/2010	29703-1-2	64426	White mastic
5/26/2010	29703-1-3	64427	Drywall joint compound
5/26/2010	29703-1-4	64428	Drywall joint compound
5/26/2010	29703-1-5	64429	Black mastic
5/26/2010	29703-1-6	64430	Floor tile & mastic
5/26/2010	29703-1-7	64431	Floor tile & mastic
5/26/2010	29703-1-8	64432	Floor tile & mastic
5/26/2010	29703-1-9	64433	Ceiling plaster
5/26/2010	29703-1-10	64434	Drywall joint compound
5/26/2010	29703-1-11	64435	White mastic
5/26/2010	29703-1-12	64436	Drywall joint compound
5/26/2010	29703-1-13	64437	Floor tile & mastic
5/26/2010	29703-1-14	64438	Floor tile & mastic
5/26/2010	29703-1-15	64439	Floor tile & mastic
5/26/2010	29703-1-16	64440	Floor tile & mastic
5/26/2010	29703-1-17	64441	Acoustic ceiling surfacing
5/26/2010	29703-1-18	64442	Construction adhesive
5/26/2010	29703-1-19	64443	White mastic
5/26/2010	29703-1-20	64444	White mastic
5/26/2010	29703-1-21	64445	Floor tile & mastic
5/26/2010	29703-1-22	64446	Drywall joint compound

Relinquished By	Date	Time	Received By	Date	Time
Tim Jones	6-1-10	1400	Kelly Pitt	061010	3:20PM

A10.4756

ASBESTOS CHAIN OF CUSTODY - US ARMY CORPS OF ENGINEERS

Project:	**Ft. Gordon Bldg 29703**	Job No.:	**10316**
Sampler:	Tim Jones	Analysis:	PLM

DATE	FIELD ID	EMU ID	COMPONENTS/NOTES
5/26/2010	29703-1-23	64447	Ceiling tile
5/26/2010	29703-1-24	64448	Drywall joint compound
5/26/2010	29703-1-25	64449	Floor tile & mastic
5/26/2010	29703-1-26	64450	Floor tile & mastic
5/26/2010	29703-1-27	64451	Floor tile & mastic
5/26/2010	29703-1-28	64452	White mastic
5/26/2010	29703-1-29	64453	Duct sealer
5/26/2010	29703-1-30	64454	Caulking material
5/26/2010	29703-1-31	64455	Drywall joint compound
5/26/2010	29703-1-32	64456	Acoustic ceiling surfacing
5/26/2010	29703-1-33	64457	White mastic
5/26/2010	29703-1-34	64458	White mastic
5/26/2010	29703-1-35	64459	Drywall joint compound
5/26/2010	29703-1-36	64460	Floor tile & mastic
5/26/2010	29703-1-37	64461	Floor tile & mastic
5/27/2010	29703-3-38	64462	Floor tile & mastic
5/27/2010	29703-3-39	64463	Floor tile & mastic
5/27/2010	29703-3-40	64464	Floor tile & mastic
5/27/2010	29703-3-41	64465	Drywall joint compound
5/27/2010	29703-3-42	64466	Black mastic
5/27/2010	29703-3-43	64467	White mastic
5/27/2010	29703-3-44	64468	Ceiling tile

Relinquished By	Date	Time	Received By	Date	Time
Tim Jones	6-1-10	1400			

A10.4756

ASBESTOS CHAIN OF CUSTODY - US ARMY CORPS OF ENGINEERS

Project:	Ft. Gordon Bldg 29703	Job No.:	10316
Sampler:	Tim Jones	Analysis:	PLM

DATE	FIELD ID	EMU ID	COMPONENTS/NOTES
5/27/2010	29703-3-45	64469	Vinyl base molding & adhesive
5/27/2010	29703-3-46	64470	Drywall joint compound
5/27/2010	29703-3-47	64471	White mastic
5/27/2010	29703-3-48	64472	White mastic
5/27/2010	29703-3-49	64473	Floor tile & mastic
5/27/2010	29703-3-50	64474	Floor tile & mastic
5/27/2010	29703-3-51	64475	Drywall joint compound
5/27/2010	29703-3-52	64476	Caulking material
5/27/2010	29703-2-53	64477	Acoustic ceiling surfacing
5/27/2010	29703-2-54	64478	Vinyl base molding & adhesive
5/27/2010	29703-2-55	64479	White mastic
5/27/2010	29703-2-56	64480	Floor tile & mastic
5/27/2010	29703-2-57	64481	Floor tile & mastic
5/27/2010	29703-2-58	64482	Floor tile & mastic
5/27/2010	29703-2-59	64483	Floor tile & mastic
5/27/2010	29703-2-60	64484	Drywall joint compound
5/27/2010	29703-E-61	64485	Caulking material
5/27/2010	29703-E-62	64486	Caulking material
5/27/2010	29703-E-63	64487	Caulking material
5/27/2010	29703-E-64	64488	Caulking material
5/27/2010	29703-E-65	64489	Caulking material
5/27/2010	29703-E-66	64490	Black mastic

Relinquished By	Date	Time	Received By	Date	Time
Tim Jones	6-1-10	1400			

A10.4756

ASBESTOS CHAIN OF CUSTODY - US ARMY CORPS OF ENGINEERS

Project:	**Ft. Gordon Bldg 29703**	Job No.:	**10316**
Sampler:	Tim Jones	Analysis:	PLM

DATE	FIELD ID	EMU ID	COMPONENTS/NOTES
5/27/2010	29703-E-67	64491	Caulking material
5/27/2010	29703-M-68	64492	White mastic
5/27/2010	29703-M-69	64493	White mastic
5/27/2010	29703-M-70	64494	White mastic
5/27/2010	29703-M-71	64495	Ceiling plaster
5/27/2010	29703-C-72	64496	White mastic
5/27/2010	29703-C-73	64497	White mastic
5/27/2010	29703-C-74	64498	White mastic
5/27/2010	29703-C-75	64499	Black mastic
5/27/2010	29703-C-76	64500	Black mastic
5/27/2010	29703-C-77	64501	Black mastic

Relinquished By	Date	Time	Received By	Date	Time
Tim Jones	6-1-10	1400			

Appendix C

Certifications and Accreditations

The Environmental Institute

Tim Jones

Has completed coursework and satisfactorily passed

an examination that meets all criteria required for

EPA / AHERA (TSCA Title II) Approved Accreditation

and NESHAP Regulations Training

Asbestos in Buildings: Inspection and Assessment

February 10-12, 1997
Course Date

2360
Certificate Number

February 12, 1997
Examination Date

February 11, 1998
Expiration Date

William H. Spain - Course Director

Rachel G. McCain - Exam Administrator

TEI - 1300 Williams Drive, Suite E - Marietta, Georgia 30066 - (770) 427-3600

The Environmental Institute

Tim Jones

Social Security Number - XXX-XX-8826
USACE - 200 N. Cobb Parkway, Suite 404 - Marietta, Georgia 30062

Has completed coursework and satisfactorily passed an examination that meets all criteria required for EPA/AHERA/ASHARA (TSCA Title II) Approved Reaccreditation and NESHAP Regulations Training

Asbestos in Buildings: Inspector Refresher

September 24, 2009
Course Date

11600
Certificate Number

September 24, 2009
Examination Date

September 23, 2010
Expiration Date

David W. Hogue - Principle Instructor / Training Manager

Rachel G. McCain - Exam Administrator

(Approved by the ABIH Certification Maintenance Committee for 1/2 CM point)
(American Indoor Air Quality Council Re-certification Credit Registration #09011202)
(Florida Provider Registration Number 0001342 - Course #0002805)
TEI - 1841 West Oak Parkway, Suite F - Marietta, Georgia 30062 - (770) 427-3600 - www.tei-atl.com

United States Department of Commerce
National Institute of Standards and Technology

NVLAP®

Certificate of Accreditation to ISO/IEC 17025:2005

NVLAP LAB CODE: 101768-0

Carolina Environmental, Inc.

Cary, NC

is accredited by the National Voluntary Laboratory Accreditation Program for specific services, listed on the Scope of Accreditation, for:

BULK ASBESTOS FIBER ANALYSIS

This laboratory is accredited in accordance with the recognized International Standard ISO/IEC 17025:2005. This accreditation demonstrates technical competence for a defined scope and the operation of a laboratory quality management system (refer to joint ISO-ILAC-IAF Communique dated January 2009).

2010-04-01 through 2011-03-31

Effective dates

Sally S. Bruce

For the National Institute of Standards and Technology

NVLAP-01C (REV. 2009-01-28)

US Army Corps of Engineers®

Savannah District
Environmental and Materials Unit

Hazardous Building Materials Survey

Building No. 29703
Ft. Gordon, Georgia

Prepared by Timothy A. Jones

The contents of this report are not to be used for advertising, publication, or promotional purposes. Citation of trade names does not constitute an official endorsement or approval of the use of such commercial products.

The findings of this report are not to be construed as an official Department of the Army position, unless so designated by other authorized documents.

Hazardous Building Materials Survey **May 2010**

Building 29703
Ft. Gordon, Georgia

by Timothy A. Jones

Final Report

Prepared for: U.S. Army Corps of Engineers
Savannah District

Hazardous Building Materials Survey Report

Introduction

Background

Building 29703 is a three story masonry barracks building built in the 1960s. The floor systems are concrete typically covered with vinyl floor tiles. Original walls are mostly concrete block however some newer drywall walls have been added. Ceilings are typically suspended metal frame with ceiling tiles. Window systems are metal framed with no glazing putty used. The roof structures are concrete decking covered with insulation and single ply rubber membrane.

Description of study

Investigation

This report documents the hazardous building materials survey of Building No. 29703 at Ft. Gordon, Georgia conducted on 26 May 2010 by USACE Savannah District employee Tim Jones. This report includes only building materials located at the time of inspection. The investigation includes a visual identification and location of such items as: fluorescent and mercury-vapor lights, including possible PCB containing ballasts; battery back-up exit lights and emergency lights; mercury-containing thermostats and switches; refrigerant containing air conditioners, water fountains and ice makers; above and below ground storage tanks; transformers; built in chemical type fire suppression systems; smoke detectors; and lead building materials. Other hazardous building materials not listed above may also be included at the discretion of the inspectors. Asbestos is excluded from this inspection as it is covered separately in an asbestos inspection report. Four paint scrape samples were collected to determine lead content. The sample was analyzed by Carolina Environmental, Inc. The analytical report is included as Appendix 1 at the end of this report.

Conclusions

The following information gathered during the survey of Building 29703 is presented in attached information:

a. *Light Count:* The fluorescent and mercury vapor light count results are presented in Table 1 of this report.

b. *Lead Building Materials:* Approximately 250 lead joints are used in the plumbing drainage piping.

c. *Lead-Based Paint:* Four paint chip samples were collected to determine lead content. This information is not to be construed as a complete lead based paint survey. Information was collected for estimating and general information purposes only. Sample details are outlined in Table 2. The laboratory's analytical report is included as Appendix 1.

d. *Compressed Refrigerant Gas:* Six refrigerated drinking fountains were located in the building. Four refrigerators were located in the building. One refrigerated air-dryer was located in the basement mechanical room. One ice machine was located in the building. This equipment is assumed to contain refrigerant gas that should be recovered prior to demolition.

e. *Portable Fire Extinguishers:* Six portable fire extinguishers were located in Building 29703.

f. *Above and Underground Storage Tanks:* No ASTs/USTs were located on the property associated with this building.

g. *Smoke Detectors:* 117 smoke detectors were located in the building.

h. *Batteries:* (1) Alarm panel with battery backup was located within the building.

i. *Mercury Thermometers:* (12) mercury thermometers were located in the building.

Tables

TABLE 1
Ft. GORDON BUILDING 29703
FLORESCENT AND MERCURY LIGHT FIXTURES

AREA IDENTIFICATION	# & TYPE LIGHTS PRESENT	DESCRIPTION OF LIGHTS
Interior	335	4 foot long, 4 bulb florescent fixtures
Interior	13	4 foot long, 1 bulb florescent fixtures
Interior	35	2 foot long, 1 bulb florescent fixtures
Interior	12	Battery backup emergency lights
Interior	17	Battery backup exit lights
Interior	30	Screw in fluorescent bulbs
Exterior	6	Square mercury light fixtures

TABLE 2
Ft. GORDON BLDG. 29703
PAINT SCRAPE SAMPLES

SAMPLE IDENTIFICATION	SAMPLE DESCRIPTION	LOCATION	ANALYTICAL REASULTS
29703-LBP-1	Tan on brick wall	Interior, first floor janitor's closet	0.1069%
29703-LBP-2	Tan on plaster wall	Interior, first floor mechanical room	0.083%
29703-LBP-3	Black on steel door frame	Interior	0.008%
29703-LBP-4	Tan on brick wall	Interior, second floor storage room	0.006%

Appendix 1

Analytical Report – Carolina Environmental, Inc.

CAROLINA ENVIRONMENTAL, INC.
107 New Edition Court
Cary, N.C. 27511
Phone: (919)481-1413 Fax: (919) 481-1442

LABORATORY REPORT
LEAD IN PAINT

Client: **US Army Corps of Engineers - Savannah District - EMU9**
200 North Cobb Parkway, Bldg. 400 Ste. 404
Marietta, GA 30062

CEI Lab Code: C10-0316
Received: 06-10-10
Reported: 06-14-10

Project: Ft. Gordon Bldg. 29703; 10316

CLIENT ID	CEI LAB ID	SAMPLE WEIGHT (mg)	CONCENTRATION % BY WEIGHT
29703-LBP-1	CA36221	348	**0.106**
29703-LBP-2	CA36222	331	**0.083**
29703-LBP-3	CA36223	337	**0.008**
29703-LBP-4	CA36224	327	**0.006**

ANALYSIS METHOD: EPA 7000B

Reviewed By:

Tianbao Bai, Ph.D.
Laboratory Director

This method has been validated for sample weights of 0.020g or greater. When samples with a weight of less than that are analyzed those results fall outside of the scope of accreditations.
*** The analysis of composite wipe samples as a single samples is not included under AIHA accreditation.**

Minimum reporting limit is 20 ug total lead. Sample results denoted with a "less than" (<) sign contain less than 20.0 ug total lead, based on a 40ml sample volume.

Lead samples are not analyzed by Carolina Environmental Inc. Lead samples are submitted to an AIHA ELLAP accredited laboratory for lead analysis of soil, dust, paint, and TCLP samples.

Laboratory results represent the analysis of samples as submitted by the client. Information regarding sample location, description, area, volume, etc., was provided by the client. Unless notified in writing to return samples, Carolina Environmental, Inc. discards client samples after 30 days. This report shall not be reproduced, except in full, without the written consent of Carolina Environmental, Inc.

REGULATORY LIMITS
OSHA Standard: No safe limit.
Consumer Products Safety Standard: Greater than 0.06% lead by weight.
Federal Lead Standard / HUD: 0.5% lead by weight.

CAROLINA ENVIRONMENTAL, INC.
107 New Edition Court, Cary, NC 27511
Tel 919-481-1413 Fax 919-481-1442

Project: Ft. Gordon Bldg. 29703; 10316

Lab Code: C10-0316

CLIENT ID	CEI LAB ID	SAMPLE WEIGHT (mg)	CONCENTRATION % BY WEIGHT

LEGEND

ug = microgram
ml = milliliter
ppm = parts per million
Pb = lead
g = grams
wt = weight

End of Report

C10. 0316 (4)
CA36221. CA36224

CHAIN OF CUSTODY - US ARMY CORPS OF ENGINEERS
LEAD-BASED PAINT ANALYSIS

Project:	**Ft. Gordon Bldg 29703**	Job No.:	**10316**
Sampler:	Tim Jones	Analysis:	% Lead in Paint

DATE	FIELD ID	EMU ID	COMPONENTS/NOTES
5/27/2010	29703-LBP-1	64502	Paint chip
5/27/2010	29703-LBP-2	64503	Paint chip
5/27/2010	29703-LBP-3	64504	Paint chip
5/27/2010	29703-LBP-4	64505	Paint chip

Relinquished By	Date	Time	Received By	Date	Time
Tim Jones	6-1-10	1400	Kristin Pratt	060101 0	3:20pm

APPENDIX CC

AUD Water & Sanitary Sewer Systems Guidelines And Backflow Preventor Spec

Water & Sanitary Sewer Systems-Guidelines

TABLE OF CONTENTS

14.1 PERMITS/ENGINEERING SUBMITTAL REQUIREMENTS
14.1.1 Inspection and Fees 14-1
14.1.2 Easements 14-1
14.1.3 Plan Submittal Requirements 14-1
14.1.3.1 Water Distribution System Construction Plans..... 14-1
14.1.3.2 Wastewater Collection System Construction Plans 14-2
14.1.3.3 General Notes..... 14-3
14.1.3.4 Detail Drawings 14-5
14.1.3.5 Record Drawings..... 14-5
14.1.3.6 Acceptance of Work..... 14-6

14.2 WATER DISTRIBUTION SYSTEMS DESIGN AND CONSTRUCTION
14.2.1 Design Guidelines
14.2.2 Design and Construction Specifications 14-7
14.2.2.1 Spatial Guidelines 14-7
14.2.2.1.1 Cover 14-7
14.2.2.1.2 Horizontal Separation..... 14-7
14.2.2.1.3 Vertical Separation..... 14-8
14.2.2.1.4 Layout 14-8
14.2.2.2 Materials and Methods..... 14-9
14.2.2.2.1 Minimum Pipe Diameter..... 14-9
14.2.2.2.2 System Pressures..... 14-9
14.2.2.2.3 Water Main Material..... 14-9
14.2.2.2.3.1 General Requirements 14-9
14.2.2.2.3.2 Applications That Require DIP ..... ….14-10
14.2.2.2.4 Boring and Jacking Water Lines 14-10
14.2.2.2.4.a Casing Pipe 14-10
14.2.2.2.4.b Carrier pipe 14-10
14.2.2.2.5 Restrained Joints 14-11
14.2.2.2.6 Reaction Blocking..... 14-11
14.2.2.2.7 Material Transitions 14-11
14.2.2.2.8 Main Taps 14-12
14.2.2.2.9 Water Service Lines and Taps 14-12
14.2.2.2.10 Meter Installation 14-13
14.2.2.2.11 Valves, Fittings, and Appurtenances 14-13
14.2.2.2.12 Fire Hydrants..... 14-14
14.2.2.2.13 Backflow Prevention Devices..... 14-15
14.2.2.2.14 Fire Lines 14-16
14.2.3 Construction Guidelines for Water Distribution Systems 14-16
14.2.3.1 Deviation from Plans 14-16
14.2.3.2 Erosion and Sedimentation Act Compliance 14-16
14.2.3.3 Work Conducted in Rights of Way..... 14-16
14.2.3.4 Water Distribution System Installation..... 14-16
14.2.3.5 Pressurization and Leakage Testing..... 14-17
14.2.3.6 Connecting to Existing System 14-18

14.2.3.7 Cleaning and Flushing 14-18
14.2.3.8 Disinfection 14-19
14.2.4 Measurement and Payment 14-19

14.3 WASTEWATER COLLECTION SYSTEMS DESIGN AND CONSTRUCTION
14.3.1 Design Guidelines 14-20
14.3.2 Design and Construction Specifications 14-20
14.3.2.1 Spatial Guidelines 14-20
14.3.2.1.1 Cover 14-20
14.3.2.1.2 Horizontal Separation 14-20
14.3.2.1.3 Vertical Separation 14-21
14.3.2.1.4 Layout 14-21
14.3.2.2 Design Parameters 14-22
14.3.2.3 Lift Station Design 14-23
14.3.2.4 Materials and Methods 14-24
14.3.2.4.1 Wastewater Collection Pipe Material 14-24
14.3.2.4.1.1 General Requirements 14-24
14.3.2.4.1.2 Applications that Require DIP 14-24
14.3.2.4.2 Tie-Ins 14-25
14.3.2.4.2.1 New Sewers Systems 14-25
14.3.2.4.2.2 Side Sewers
14.3.2.4.3 Wastewater Collection Lines 14-25
14.3.2.4.3.1 Wastewater Line Bedding 14-25
14.3.2.4.3.2 Laying Belled Pipe 14-26
14.3.2.4.3.3 Transitions 14-26
14.3.2.4.3.4 Backfilling Around Pipe 14-26
14.3.2.4.3.5 Detectable Tape
14.3.2.4.3.6 Boring and Jacking 14-26
14.3.2.4.4 Wastewater Manholes 14-26
14.3.2.4.4.1 General Guidelines 14-26
14.3.2.4.4.2 Manhole Inverts 14-27
14.3.2.4.4.3 Drop Manholes 14-27
14.3.2.4.4.4 Setting Manhole Frames and Covers 14-27
14.3.2.4.4.5 Setting Precast Manhole Sections 14-28
14.3.2.4.5 Sewer Structures 14-28
14.3.2.4.5.1 Masonry 14-28
14.3.2.4.5.2 Laying Brick and Concrete Block Work 14-28
14.3.2.4.5.3 Plastering and Curing Brick or Block Masonry 14-28
14.3.3 Construction Guidelines for Wastewater Collection Systems 14-28
14.3.3.1 Deviation from Plans 14-28
14.3.3.2 Erosion and Sedimentation Act Compliance 14-29
14.3.3.3 Work Conducted in Rights-of-Way 14-29
14.3.3.4 Wastewater Collection System Installation 14-29
14.3.3.4.1 Laying Sewer Pipe 14-30
14.3.3.4.2 Bulkheads for Tying-In and New Line Flushing 14-30
14.3.3.4.3 Temporary Plugs 14-30
14.3.3.4.4 Joint and Pipe Infiltration

14.3.3.4.5 Force Main Installation 14-31
14.3.3.4.6 Removal and Replacement of Existing Pipe and Equipment 14-31
14.3.3.5 Inspection Infiltration/Exfiltration Leakage Testing 14.31
14.3.4 Measurement and Payment 14-31

14.4 EXCAVATION AND BACKFILLING 14-33
14.4.1 Scope
14.4.2 Existing Improvements 14-33
14.4.3 Excavation
14.4.3.1 Grading and Stacking 14-33
14.4.3.2 Shoring and Sheeting 14-33
14.4.3.3 Water Removal 14-33
14.4.3.4 Blasting 14-33
14.4.3.5 Tree Protection 14-35
14.4.4 Backfilling 14-35
14.4.5 Boring and Jacking 14-36
14.4.6 Pavement Removal and Replacement 14-36
14.4.7 Measurement and Payment 14-36

14.5 REFERENCES 14-37

14.6 APPENDICES
14.6.1 Standard Details
14.7 ERRATA

Water & Sanitary Sewer Systems-Guidelines

LIST OF TABLES

Table 1: Engineering Design Parameters .....
Table 2: Minimum slope per Representative Pipe Size

These specifications shall be used in the design and construction of Augusta water and wastewater systems. The standards and specifications presented herein are subject to revisions, typically in February of every year. Minor modifications will be made throughout the year using an errata page, which will spell out changes since the last revision of the document. In case of conflicts, the following precedence will apply: State and local ordinance, Augusta, GA government resolutions, Augusta, GA government approved contracts, GA DNR regulations, these design standards, drawings, and specifications. Conflicts should be brought to the immediate attention of the Augusta Utilities Director.

The listing of a product by its trade name does not imply an endorsement, and signifies only that the technical capabilities of the product are acceptable to Augusta, and that an equivalent product can be used in its place.

14.1 PERMITS/ENGINEERING SUBMITTAL REQUIREMENTS

14.1.1 Inspections and Fees

14.1.2 Easements

14.1.3 Plan Submittal Requirements

Augusta Utilities Department (AUD) shall supply a standard layout with standard details and symbols archived as blocks in AutoCAD™ format. This standard layout should be used in all plan submittals to AUD. This standard layout should be submitted on an ANSI D size sheet, or other at the approval of AUD. Submitted drawings using a color legend shall comply with the APWA Color Code requirements.

14.1.3.1 Water Distribution System Construction Plans

Water Construction Plans submitted to AUD for review must contain the following minimum information, on the standard AUD layout:

14.1.3.1.a Project name.

14.1.3.1.b Location/Vicinity Map with a North arrow.

14.1.3.1.c Scale showing drawing units to real units, minimum 1”= 20’ to a maximum of 1” = 100’. Metric system scales and measurements are not allowed.

14.1.3.1.d Show subject property and adjacent property information including subdivision name, lot numbers, block letters, property owners, etc.

14.1.3.1.e Show existing conditions, including structures, pavement widths, right-of-way widths, temporary and adjoining easements, adjoining roads, road names, etc.

14.1.3.1.f Label type and size of all easements.

14.1.3.1g Shade easements to be dedicated to AUD for water lines installed outside proposed rights-of-way.

14.1.3.1.h Show the location, size and material of existing water mains along with other appurtenances. Existing water lines shall be shown as dashed lines with a ‘W’ every one inch.

14.1.3.1.i Show the location, size and material of proposed water mains, valves, hydrants and service lines along with all other water appurtenances involved with the proposed project. Proposed water lines shall be shown as solid lines.

14.1.3.1.j A profile shall be included on the plans.

14.1.3.1.k Number all fire hydrants sequentially starting at 1.

14.1.3.1.l Show locations, type and size of all proposed backflow prevention devices.

14.1.3.1.m Owner's name and property address as it appears on easement plats, e.g.- N.F. Smith, 180 Bay St.

14.1.3.1.n Match lines should be included on the plan and profile views along the water line where the plan sheets overlap, showing page numbers on the appropriate side of the match line.

14.1.3.1.o Station numbers should be included on the plan and profile views of the water line.

14.1.3.1.p Developer's name, address, and phone number, if applicable.

14.1.3.1.q Professional Engineer's name, address, fax & phone number and e-mail address.

14.1.3.1.r Professional Engineer's signed seal.

14.1.3.2 Wastewater Collection System Construction Plans

Wastewater Construction Plans submitted to the AUD for review must contain the following minimum information, on the standard AUD layout:

14.1.3.2.a Project name.

14.1.3.2.b Location/Vicinity Map with a North arrow.

14.1.3.2.c Scale showing drawing units to real units, minimum 1"= 20' to a maximum of 1" = 100'. Metric scales and measurements will not be allowed.

14.1.3.2.d Show subject property and adjacent property information including subdivision name, lot numbers, block letters, property owners, etc.

14.1.3.2.e Show existing conditions, including structures, pavement widths, right-of-way widths, temporary and adjoining easements, adjoining roads, road names, storm sewers, etc.

14.1.3.2.f Label type and size of all easements.

14.1.3.2.g Shade easements to be dedicated to AUD for wastewater lines installed outside proposed rights-of-way.

14.1.3.2.h Show easements dedicated to the AUD for wastewater lines to serve adjacent properties.

14.1.3.2.i Show the location, size and material of existing wastewater lines and force mains along with other appurtenances. Existing sewer lines shall be shown as dashed lines.

14.1.3.2.j Show the proposed location, size and material of sewer mains, force mains, sewer manholes, service lines with clean-outs and sewerage lift stations involved with the proposed project. Proposed sewer lines shall be shown as solid lines.

14.1.3.2.k Show the limits of the 100 year flood plain with a dashed line, if applicable.

14.1.3.2.l Show the location of hydric soils and wetlands, with an appropriate shading or hatch, if applicable.

14.1.3.2.m Show the location of existing bodies of water, including streams, lakes, ponds, marshes, etc.

14.1.3.2.n Creek crossings require full scale details at 1" = 20' scale minimum, including, but not limited to, piers and all other appurtenances.

14.1.3.2.o All sanitary manholes marked on the plans should be identified with a state plane coordinate number.

14.1.3.2.p Owner's name and the property's physical address as it appears on easement plats, e.g.- N/F Smith, 180 Bay St.

14.1.3.2.q Match lines should be included on the plan and profile views along the sewer line where the plan sheets overlap, showing page numbers on the appropriate side of the match line.

14.1.3.2.r Station numbers on the plan and profile views.

14.1.3.2.s Line of existing and proposed ground surface.

14.1.3.2.t The grade of the sewer between each two adjacent manholes to hundredths place if in percent (0.00%)

14.1.3.2.u Invert of sewer in and out of each manhole, with flow direction labels if more than 2 pipes connect to a manhole.

14.1.3.2.v Surface elevation of each manhole, based on a specified datum.

14.1.3.2.w All sanitary manholes shall be numbered on the plan and correspondingly numbered on the profile. The station number shall be shown for each manhole, as well as coordinates in state plane feet, Georgia Eastern zone, on NAD 83. The vertical datum system shall be NAVD 88.

14.1.3.2.x The location and elevation of adjacent parallel stream beds and of adjacent water surfaces shall be shown on the plan and profile.

14.1.3.2.y Sizes, locations and inverts of all special features such as, but not limited to, connections to existing sewers, wet wells, concrete encasement, collar walls, elevated sewers, piers, special manhole covers such as vented outfall or sealed covers, etc.

14.1.3.2.z All structures, both above and below ground, which might interfere with the proposed construction, particularly water mains, gas mains, storm drains, utility conduits, etc., shall be shown on the plan and the profile. Refer to sections 14.2.2.1.2 and 14.3.2.1.2 for horizontal separation requirements for water and wastewater, respectively.

14.1.3.2.aa Identify pipe crossings with letter, or other, designation on the plan and profile. Specify top of pipe and bottom of pipe elevations at crossings to verify there is no conflict. See sections 14.2.2.1.3 and 14.3.2.1.3 for vertical separation requirements for water and wastewater, respectively.

14.1.3.2.ab All existing waterworks units, including basins, wells, and treatment units, located within 200 feet of a proposed sewer shall be shown on the engineering plans. Soil conditions within this 200 feet between the sewer line and waterworks units shall be determined and shown on the plans.

14.1.3.2.ac All pipes crossing proposed wastewater lines shall be shown as conflicts in plan and profile views on the wastewater plan sheets (not on detail sheets). Crossings shall be designated by a letter (A, B, C, etc…) and include information regarding top of pipe and bottom of pipe elevations. Contact AUD for an example. The design engineer is responsible for identifying all conflicts.

14.1.3.2.ad Developer's name, address, and phone number, if applicable.

14.1.3.2.ae Professional Engineer's name, address, and phone number.

14.1.3.2.af Professional Engineer's signed seal.

14.1.3.3 General Notes

Notes to be shown on both water and wastewater plans include:

14.1.3.3.a The Developer and/or Developer's Contractor is responsible for verifying the exact location, size and material of any existing water or sewer facility proposed for connection or use by this project.

14.1.3.3.b All construction of water distribution system and wastewater collection system lines shall be in accordance with AUD's Standards and Specifications.

14.1.3.3.c All PVC water lines shall be class 200 PVC meeting AWWA C-900, unless otherwise shown.

14.1.3.3.d All DIP water lines shall be class 350 for lines under 16", and class 300 for lines 18" through 24"

14.1.3.3.e All water lines shall be tested, chlorinated, and checked for bacteria per section 14.2.3.5 thru 14.2.3.8.

14.1.3.3.f AUD Engineering Division shall be notified 48 hours (two working days) prior to any construction, tie-ins, or testing of water or wastewater lines. (706-312-4132) No work shall commence until contact is made with AUD.

14.1.3.3.g Copper Wire (12 gauge, Single Strand) shall be attached along top of all buried PVC water lines, wrapped around service corporations and stubbed up into all valve boxes for locating purposes. This wire shall be properly spliced for electrical connectivity and then insulated to protect against corrosion.

14.1.3.3.h Per AUD Specifications for backflow installations for non-residential development, a minimum "double check" backflow-prevention device shall be installed on the customer's side of all service. Fire lines require a "Detector Type" backflow device. Backflow Devices shall be tested by a certified person within 5 working days of installation and the results furnished to the AUD Engineering Division within 10 working days of installation prior to any water use. AUD shall be notified prior to testing.

14.1.3.3.i Per AUD Specifications for backflow installations residential development shall install a "Dual Check" Backflow Device on the customer's side of service line at the point of tie-in to the water meter.

14.1.3.3.j All water valves on the main lines, including hydrant laterals, shall be **open-left** if installed south of Gordon Highway (S.R.-10), or **open-right** if installed north of Gordon Highway.

14.1.3.3.k The Developer and/or Contractor shall furnish, install, and maintain a Rome type 10" x 19" x 10" cast iron or approved equal meter box at the termination point of all water services until such time the meter is installed.

14.1.3.3.l The Developer/Contractor shall etch a "W" in the curb, or in the pavement if no curb is available, and highlight the etching with blue paint per the APWA uniform color code (APWA, 2000).

14.1.3.3.m All water meters shall be purchased from AUD.

14.1.3.3.o All tie-ins to existing manholes shall be cored. All manholes require "K or N Seal" or equal rubber boots.

14.1.3.3.p No connection shall be made to existing wastewater lines until the proposed line is inspected and approved by AUD's Engineering Division.

14.1.3.3.q The Developer/Contractor shall etch an "S" in the curb, or in the pavement if no curb is available, and highlight the etching with green paint per the APWA uniform color code (APWA, 2000).

14.1.3.3.r Wastewater clean-outs shall be installed at all individual services as shown in AUD-Detail 6, and shall not be installed under driveways or any paved areas without prior approval from AUD.

14.1.3.3.s Finished floor elevations of all proposed buildings shall be a minimum of five (5) feet above the invert elevation of the wastewater main or manhole at the

point of tie-in. In instances where this is not possible, a backwater valve shall be installed in the sewer service.

14.1.3.3.t All wastewater manholes shall have an elevation drop of 0.1 foot across the inlet and outlet inverts.

14.1.3.3.u Sewer force main shall be PVC C-900, class 200 or D.I.P., class 350,exopy lined. If the main is PVC, then 12 gauge bare single strand wire shall be attached along the top of the main, or detectable tape if approved by AUD engineering staff.

14.1.3.3.v A minimum 15' Utility Easement centered over all water lines and a minimum 20' Utility Easement centered over all wastewater lines shall be deeded to the Augusta, Georgia at completion and acceptance of said lines. Easements containing both water and sewer shall total 30' in width, while maintaining minimum separation requirements listed in sections 14.2.2.1 and 14.3.2.1.

14.1.3.3.w Disturbance of any Survey Markers or Monuments requires re-establishment by a registered land surveyor at the Contractor's expense.

14.1.3.3.x For private developments, AUD shall not be responsible for pavement patching and/or replacement and the site restoration whenever AUD performs repair, replacement, or installation work.

14.1.3.3.y If AUD must repair or replace utilities on the property, then the developer shall arrange for access by AUD as required to repair or replace the utility.

14.1.3.3.z Contractor shall contact the Utilities Protection Inc. "Call Before You Dig" service in order to locate utilities prior to starting any excavation or construction.

14.1.3.3.aa If a conflict arises between the new work and the existing water and sewer facilities during the course of construction, it will be the responsibility of the Owner/Developer/Contractor, at his expense and not AUD's, to correct the discrepancy as directed by a representative of AUD.

14.1.3.3.ab A right-of-way encroachment permit shall be obtained from the Public Works Department prior to commencing work within an Augusta, Georgia right-of-way.

14.1.3.3.ac An AUD inspector shall be present when a tap or tie-in occurs.

14.1.3.3.ad A reduced pressure zone (RPZ) backflow device will be required for high hazard locations. A written request shall be submitted to AUD for the required backflow prevention device for a specific site.

14.1.3.3.ae Augusta Utilities shall not be responsible for pavement repair or site restoration associated with repair/replacement of a water or sewer line in private property.

14.1.3.3.af Existing fire hydrants and meters that are removed shall be turned over to AUD.

14.1.3.4 Detail Drawings

All standard AUD detail drawings shall be included in the plans for all AUD projects, even if the use of the details is not anticipated. The standard details are part of the appendices.

14.1.3.5 Record Drawings

The Contractor shall record, on a weekly basis, on one set of utility drawings all changes and deviations from the contract drawings in sizes, lines or grade. Record also the exact final location of water lines by offset distances to surface improvements such as edge of existing pavement or to property markers, etc. at a maximum interval of 200 feet. Make sufficient measurements to definitely locate all water lines to permanent points. The drawings will show

references to all valves, fittings, pipe brand changes, etc., and shall use the approved Augusta, GA edge of pavement layer as a reference. Transfer accurately all such records in red pen or pencil to white prints of the utility drawings and deliver them to the Engineer or Inspector with the monthly payment estimate.

At the completion of the water and/or wastewater construction and prior to recording the final plat, the Contractor shall furnish AUD's Inspector with red-line drawings of the project. The drawings must show all field changes made to the approved drawings. Record Drawings shall be prepared from these red-line drawings by the Design Engineer's firm and submitted in digital format, as well as on 2 paper copies on the AUD standard layout. Acceptable digital formats include Arc/Info, Arc/Info export file, or a DXF file generated by AutoCAD from the DWG file and including all relevant software "blocks" and references. Contact AUD for the proper software revision number prior to submission. Digital drawings shall be saved with a layout view for each sheet. All digital record drawings submitted must conform to Georgia State Plane East projection, on North American Datum (NAD) 83, in units of feet, with a defined vertical datum. A Data Dictionary should be included with each file defining individual layers or attribute fields.

Water distribution system record drawings shall be a separate plan from the wastewater collection system record drawings. Maximum plan size shall be 24" x 36". Scale shall be no larger than 1" = 20' and no smaller than 1" = 100' horizontally and no smaller than 1"=10' vertically. No hand-drawn or marked up construction plans will be accepted as record drawings. "RECORD DRAWING" shall be stamped in large print on the plan. If the project is a phase of a subdivision, a location sketch of the entire subdivision with subject phase outlined shall appear on drawings.

Record drawings shall contain the following information:

14.1.3.5.a Developer's name, address, and phone number.

14.1.3.5.b Contractor's name, address, and phone number.

14.1.3.5.c Lot numbers.

14.1.3.5.d Road names and rights-of-way widths.

14.1.3.5.e Water and sanitary easements.

14.1.3.5.f All water service locations and distances from both front property corners of serviced lot for new development construction.

14.1.3.5.g All wastewater services with clean-outs and distances from both property corners of serviced lot and from nearest manhole for new development construction.

14.1.3.5.h Invert and top elevations of all manholes as well as state-plane coordinates as supplied by red-lined drawings. See standard AUD plan layout located at http://www.augustaga.gov/departments/utilities/.

14.1.3.5.i Label all sewer services as to distance from a specified manhole, i.e.-Manhole A5+56'.Standard AUD plan layout (http://augustaga.gov/departments/utilities/).

14.1.3.5.j Label all water services as to distance from a specified valve, i.e.- Valve 5+56'. See standard AUD layout (http:www.augustaga.gov/departments/utilities/). Valve numbering shall be sequential to the degree possible.

14.1.3.5.k All valves, nodes and fittings for water line construction shall be labeled with state plane coordinates and depths as provided by AUD on red-lined drawings.

See standard AUD plan layout (http://www.augustaga.gov/departments/utilities/).

14.1.3.6 Acceptance of Work
Once an approved Record Drawing is received, final inspection is completed, and (a) final plat(s) with maintenance agreement is recorded, AUD will accept the newly constructed system. The Developer/Contractor shall be responsible for any defects in materials or workmanship within the subject system for a period of twelve (12) months from the date of the maintenance agreement.

> **IMPORTANT:** A note stating that "Augusta Utilities shall not be responsible for pavement repair or site restoration associated with repair/replacement of a water or sewer line" shall be included on all final plats for private developments.

14.2 WATER DISTRIBUTION SYSTEMS DESIGN AND CONSTRUCTION

14.2.1 General Design Guidelines

All water distribution system designs shall conform to the requirements as set forth in "Minimum Standards for Public Water" (GA EPD, 2000) as published by the Georgia Environmental Protection Division (http://www.dnr.state.ga.us/dnr). A Professional Engineer registered in the State of Georgia must prepare the plans and specifications.

There shall be no physical connection between a potable water supply and a questionable water supply which would allow unsafe (contaminated) water to enter the potable water system by direct pressure, vacuum, gravity or any other means.

Hydraulic designs shall be based upon pressure data applicable to the portion of the service area that will serve the proposed facility. Air release valves in vaults shall be provided in the water main. All water distribution systems shall be looped to the greatest extent possible.

Design engineers shall utilize Augusta Utilities Standards and Specifications to develop specifications to be utilized in AUD projects.

14.2.2 Design and Construction Specifications

14.2.2.1 Spatial Guidelines
14.2.2.1.1 Cover
Standard cover requirements are as follows:

14.2.2.1.1.a Standard depth of cover is 4 feet below **existing and proposed road surface** (and areas designed for normal traffic loading) unless otherwise approved by AUD.

14.2.2.1.1.b Minimum cover to finished grade over water mains shall be 36 inches. Minimum cover under ditch bottoms shall be 24 inches. Any variance in minimum cover must be approved by AUD on a case-by-case basis.

14.2.2.1.1.c In the event the shoulder of the road should rise above the roadway level, the water main shall be placed at a depth to maintain 4 feet below the road surface in order to keep a four foot depth for future driveway cuts.

14.2.2.1.2 Horizontal Separation

Unless otherwise specified, horizontal spacing should conform to the following rules, where all separation distances listed are **edge to edge**:

14.2.2.1.2.a Ten (10) feet to any existing or proposed wastewater lines or force main, storm sewer or sewer manhole. Horizontal separation of less than 10 feet requires pipe material to be DIP for water mains, wastewater lines or force mains.

14.2.2.1.2.b Fifteen (15) feet to buildings, top of bank of lakes, streams, creeks or other structures. Ten (10) feet is considered the absolute minimum, and will only be considered by AUD when unavoidable. If separation distance is less than ten (10) feet, the pipe material is required to be DIP.

14.2.2.1.2.c Where horizontal separations between water and sewer cannot be met, water and sewer lines shall be DIP, and joints staggered such that maximum separation exists between joints AS APPROVED BY AUD.

14.2.2.1.2.d Ten (10) feet minimum separation to gas mains.

14.2.2.1.2.e Ten (10) feet minimum to underground electric cable.

14.2.2.1.2.f Current Georgia EPD separation requirements.

14.2.2.1.3 Vertical Separation

Unless otherwise specified, vertical spacing should conform to the following rules, where all separation distances listed are **edge to edge**:

14.2.2.1.3.a Water mains shall cross over and not under other pipes.

14.2.2.1.3.b Eighteen (18) inch minimum separation between all pipes and cables shall be maintained, with six (6) inch absolute minimum separation with DIP, when conforming to Georgia EPD separation requirements.

14.2.2.1.3.c When water mains cross under sewers, additional measures shall be taken. At least 18 inches of separation between the bottom of the sewer and the top of the water main shall be provided. Adequate structural support for the sewer shall be provided to prevent deflection or settling on the water main. No joint shall be encased under the crossing. Encasement of the water pipe in concrete or flowable fill will also be considered.

14.2.2.1.3.d Where vertical separations between water and sewer cannot be met, water and sewer lines shall be DIP, and joints staggered such that maximum separation exists between joints AS APPROVED BY AN AUD ENGINEER.

14.2.2.1.4 Layout

Spatial layout shall observe the following guidelines:

14.2.2.1.4.a Normal location of proposed water lines is on the north side of east-west streets, and the east side of north-south streets.

14.2.2.1.4.b For existing County roads, the proposed water line will generally be located five (5) feet inside the right-of-way. For existing State roads, the proposed water line must be located five (5) feet inside the right-of-way. Unusual circumstances may warrant deviation. The location of the water line will also be determined by the location of the existing lines to be tied into at the beginning and end of the project.

14.2.2.1.4.c For subdivisions, the proposed water line shall be located four (4) feet from the back of the curb. Where ditches are present beside the curb, refer to the Rights-of-Way Encroachment Guidelines (latest version).

14.2.2.1.4.d Wherever possible, avoid laying water lines on the same side of the road as gas lines.

14.2.2.1.4.e Water service lines for residential development shall be located at the center of the lot.

14.2.2.1.4.f Water line dead ends shall be minimized by making appropriate tie-ins whenever practical. Permanent dead ends will not be accepted unless unavoidable. Dead ends shall be equipped with a fire hydrant. Under special circumstances, where water lines smaller than six (6) inches in diameter are accepted, an approved blow-off shall be required for flushing purposes.

14.2.2.1.4.g All water mains shall be placed in right-of-way areas or dedicated easements. All easements shall allow adequate area to construct and maintain the water line and appurtenances involved. Permanent easements shall be a minimum of 15 feet wide with line installed in center of easement. Permanent easements shall be provided as needed to serve adjacent property, even if the water line is not installed at that time. If the line has not been installed to future serve adjacent property, a larger easement than the minimum may be required to construct future line. Easement agreements shall be specific to state that no permanent structures may be constructed within the limits of permanent easements.

14.2.2.2 Materials and Methods

14.2.2.2.1 Minimum Pipe Diameter

Water mains shall have a minimum nominal inside diameter of 8 inches. However, 6-inch mains will be allowed in single-family residential subdivisions where the system is looped. Water mains having an inside diameter of less than 6 inches will not be considered.

14.2.2.2.2 System Pressures

The design engineer shall not assume a pressure greater than 35 psi at the meter of a detector check valve without confirmation from AUD. The design engineer shall contact AUD to schedule a pressure test, which the design engineer can witness.

The new water main shall have the ability to meet maximum daily demands plus fire flow requirements as mandated by Georgia EPD “Minimum Standards for Public Water Systems” (GA EPD, 2000) and the Augusta Fire Marshal. The residual design pressure under all conditions shall not be less than 20 psi.

14.2.2.2.3 Water Main Material

14.2.2.2.3.1 General Requirements

Water mains shall be either ductile iron pipe (DIP), polyvinyl chloride (PVC), or galvanized pipe as outlined below. The minimum size of water main shall be 6 inches unless otherwise approved by the Utilities Director. For all proposed developments, a professional engineer shall perform a hydraulic network analysis that will indicate the water line size needed to meet max day demand plus fire flow. Pipes larger than the minimum size must be provided if indicated by the analysis.

DIP shall be centrifugally cast and shall conform to AWWA C150/ANSI A21.50 (latest version) for design and AWWA C151/ANSI A21.51 (latest version) for manufacture. PVC pipe 6 inch to 12 inch diameter shall conform to AWWA C900 (latest version). PVC pipe 14 inch to 36 inch diameter shall conform to AWWA C905 (latest version).

For water mains 6” through 16”, DIP Pressure Class 350 shall be allowed. For water mains 18” through 24”, DIP Pressure Class 300 shall be allowed. PVC C900 (most current date), Class 200, SDR-14 with cast iron equivalent O.D.s, gasket bell end with elastomeric gaskets shall be allowed for water mains 6” through 10” (solvent weld joints are not permitted). Flanged DIP shall have threaded ductile iron flanges and shall conform to the requirements of AWWA C115/ANSI 21.15 (latest version). All flanges shall be ductile iron class 150 with a minimum working pressure of 350 psi for diameters 3”-12”, and 250 psi for 14”-48” diameter pipe., and conform to ANSI B16.5 (latest version). Flanges shall be flat faced and all joints shall use 1/8 inch black neoprene full-faced gaskets.

Ductile iron pipe and fittings shall have bituminous coating outside and shall be cement lined in accordance with AWWA C104/ANSI A21.4 (latest version). DIP shall have 1/16” cement mortar lining with rubber gasket push-on joints, restrained joint, or mechanical joints. Mechanical joint glands shall be ductile iron. Tee bolts and nuts shall be Cor-Ten steel. Rubber gasket joints shall conform to AWWA C111/ANSI A21.11 (latest version), and shall be furnished by the pipe manufacturer with the pipe. A non-toxic vegetable soap lubricant shall be supplied with the pipe in sufficient quantities for installing the pipe. The lubricant shall be approved by NSF for use with potable water mains.

Pipe classes designated previously in this standard are minimum allowed. Actual pipe class shall be determined based upon the installation and the use intended. Pipe shall be appropriately labeled on the drawings. All PVC pipe for potable water service shall bear the approved stamp of the National Sanitation Foundation. Copper wire (12 gauge) shall be attached along the top of all buried PVC water lines, wrapped around service corporations and stubbed up into all valves boxes for locating purposes. This wire shall be mechanically spliced so as to be electrically conductive, then insulated to protect against corrosion of the bare wire.

Any pipe, solder and flux used during installation of the water lines and services must be “lead-free” with not more than 8% lead in pipe and fittings, and not more than 0.2% lead in solders and flux.

14.2.2.2.3.2 Applications That Require DIP
DIP shall be required as carrier pipe in the following circumstances:

14.2.2.2.3.2.a Within 10 feet of sanitary and storm pipes.

14.2.2.2.3.2.b Within 15 feet of structures (near side of concrete footing), or top of bank of lakes/streams/creeks.

14.2.2.2.3.2.c Crossings over or under sewers and storm pipes with less than 18 inches separation, with no joint allowed within 10 feet of crossing.

14.2.2.2.3.2.e Within project boundaries of subdivisions with private roads where the Utilities Department will take over the line for operations and maintenance while the roads will not be deeded to Augusta.

14.2.2.2.3.2.f Along all state rights-of-way.

14.2.2.2.3.2.g The Utilities Director may mandate DIP in any instances of off-site or on-site construction where future abuse to the line is possible due to location or circumstances.

14.2.2.2.4 Boring and Jacking Water Lines

Where required by the drawings, the water line will be installed in a steel casing, placed by boring and jacking. Where boring is required under highways or city/county roads, the materials and workmanship will be in accordance with the standards of the Georgia Department of Transportation or local authority. Boring and jacking under railroads will be governed by the latest A.R.E.A. Standards, Part 5, "Pipelines" and those of the railroad involved. The following guidelines apply to jack and bore installations:

14.2.2.2.4.a Casing Pipe

The casing pipe shall conform to the materials standard of ASTM Designation A252, with minimum wall thickness of 0.219 inch. Steel pipe will have a minimum yield strength of 35,000 psi. Casing pipe shall be joined together with welded joints, and work shall be performed by a certified welder.

14.2.2.2.4.b Carrier Pipe

The carrier pipe shall be ductile iron as specified herein.

14.2.2.2.4.c Installation

The steel casing shall be installed by the "Dry Bore and Jack" method. If voids develop or if the bored hole diameter is greater than the outside diameter of the pipe by more than approximately 1 inch, remedial measures will be taken as approved by an AUD Engineer.

When installing water line through casing, Contractor shall use mechanical joint pipe with retainer glands through length of casing or field-lok gaskets. The water main shall be equipped with locking gaskets placed throughout length of casing to adequately restrain the pipe. The ends of the casing shall be sealed with brick and mortar, or a manufactured collar. The pipe shall be supported by with a minimum of two casing spacers per twenty (20) feet of pipe, with one spacer approximately 1 foot from the bell of the pipe.

14.2.2.2.5 Restrained Joints

The method used to restrain joints shall be suitable for the pipe size thickness and test pressure as required for the specified design case. The plans shall indicate the restrained length of pipe on each side of the fittings in both the plan and profile views. Calculations for restrained joints shall be provided by the design engineer. Retainer Glands/Mega-Lug shall be considered a restrained fitting.

Restrained Joints shall be DIP as follows:

14.2.2.2.5.a For 12-inch and Smaller – Restrained joint shall be U.S. Pipe Field Lok, American Ductile Iron Pipe Lok-Fast, EBAA Iron Mega-Lug, or an equivalent product.

14.2.2.2.5.b For 14-inch Diameter and Larger – Restrained joint shall be U.S. Pipe TR Flex, American Ductile Iron Pipe Lok-Ring, or equivalent product, or EBAA Iron Mega-Lug.

14.2.2.2.5.c If inserting in older cast iron pipe, the restrained joint shall be as approved by AUD.

14.2.2.2.6 Reaction Blocking

In lieu of restrained joints, all plugs, caps, tees, bends and other fittings shall be provided with adequate reaction blocking as shown on AUD-Details 11 & 12.Fittings shall be poly wrapped (6 mil) before pouring reaction blocking.Thrust blocks shall be poured-in-place concrete having a minimum compressive strength of 3,000 psi after 28 days of cure time. Soil bearing

value shall be 2,000 psf maximum, and reaction blocking shall be made to bear directly against the undisturbed trench wall. Lower soil bearing values shall be used when soil is poor quality. Where trench conditions are, in the opinion of the Engineer, unsuitable for reaction blocking, the Contractor shall provide tied joints to adequately anchor the piping as shown on the drawings. All the rods and clamps shall be given a bituminous protective coating. All materials, fittings and appurtenances intended for use in pressure pipe systems shall be designed and constructed for a minimum working pressure of 200 psi unless the specific application dictates a higher working pressure requirement.

14.2.2.2.7 Material Transitions

When transitioning water lines, materials shall be indicated and specified and must be approved by AUD. Asbestos-cement transitions shall follow the AUD asbestos-cement water line crossing detail (AUD- Detail 20). Unspecified transitions from DIP to PVC are not allowed. When transitioning, all construction material shall be first quality, not previously used. Repair clamps are not acceptable. Damaged or faulty pipe and materials must be properly replaced. All gaskets shall be new. When connecting to existing valves or fittings, gaskets shall be replaced, not reused.

14.2.2.2.8 Main Taps

Mains may be tapped as long as the tapping line is smaller than the tapped line unless otherwise approved by AUD. See Section 14.2.2.2.9 for service tap requirements. Equal size line connections approved by AUD shall require that a tee be cut into the main where possible. Tees are also required at locations dictated by the Utilities Director. Tapped connections in pipe and fittings shall be made in such a manner as to provide a watertight joint and adequate strength against pull-out. In addition, the following guidelines shall be met:

14.2.2.2.8.a Tapping Sleeves and tapping crosses shall be of a heavy body ductile iron, mechanical joint suitable for a working pressure of 200 psi for sleeves and crosses larger than 14-inch, or a working pressure of 250 psi for sleeves and crosses equal to or less than 14-inch, or as approved by AUD. Tapping sleeves and valves are required for all taps 4 inches and greater. Taps less than 4 inches shall be provided with a service saddle meeting the requirements of Section 14.2.2.2.9. Valves shall be provided on all taps. Tapping sleeves shall be a minimum of 6 feet from pipe joints.

14.2.2.2.8.b Schedule 40 PVC shall only be used as a sleeve for the installation of service line tubing under pavement areas. Use in the water distribution system or other areas is not acceptable.

14.2.2.2.9 Water Service Lines and Taps

For 2” service lines: Galvanized pipe shall be seamless, American made, Schedule 80 and shall conform to the ASTM Specifications.

Where water service lines connect to DIP or any pressure-rated pipe, service saddles must be used. No direct service taps shall be allowed. Brass double strap tapping saddles shall be used. U-bolt type straps are not acceptable. All water service taps on the main shall be spaced at a minimum distance of 18 inches apart and a minimum of 18 inches from a bell or fitting. If two or more taps are required at a minimum spacing, they shall be offset 45° alternatively. Services greater than one (1) inch shall be seamless galvanized. Two-inch (2”) services shall

have three 2”, 90-degree galvanized, non-malleable elbows per Augusta Utilities’ two-inch Water Service detail.

All service line taps shall be supplied with corporation stops (AUD-Detail16). General requirements for corporation stops are as follows: for 1” services, a Ford FB-600-4 or equivalent with a taper thread inlet and flared copper outlet. For 1” water service lines, eighth bend shall be the Ford LA02-44 or equivalent or the Ford LA04-44 or equivalent for compression fittings.

Service line tubing shall be rolled of soft continuous and seamless copper Type K conforming to AWWA C800 and ASTM B-88 (latest version). The minimum diameter for residential use shall be one (1) inch. The service line shall be laid in a straight line and be of a continuous piece of pipe from corporation to curb cock (AUD-Detail 16), and shall not exceed 100 feet in length from the main to the meter. No service line fittings shall be placed under the roadway. For wide roadways, it may be considered placing fittings in the median. The curb cock shall be located 6 inches behind and 8 inches below the top of new curb or edge of asphalt.

14.2.2.2.10 Meter Installation

The Contractor/Developer shall furnish and install an approved meter box at the termination point of all water services, and maintain the box until such time as a meter is installed. Meter boxes for one and one-half inch (1½“) and smaller meters are standard, while two-inch (2”) can be installed in a Rome oversized 2” cast-iron box. Meters three-inches (3”) and larger shall be installed in a meter vault. Meter boxes shall be Rome type, 10” x 19” x 10” cast iron box and lid. The top shall have cast ribs on the bottom side with four (4) legs to prevent sliding movement. The box shall have a minimum weight of 37 lbs., for meters one and one-half inch (1½“) or smaller. Meter and curb stop shall be fully encased by the meter box. Meter vaults for meters two-inch (2”) and larger shall be pre-cast reinforced concrete using 3,000 psi concrete and #4 rebar (AUD-Detail 15). No site built vaults are permitted.The access hatch shall be made of heavy-duty aluminum, and shall be hinged and lockable. The hatch shall be large enough for removal of the meter but no smaller than 36” x 36”. For commercial applications, the meter lid shall have a notch to accommodate automated meter reading technology. Wall dimensions shall allow 2 feet of working clearance. Vault floors shall be no less than four inches (4”) thick with 3,000 psi concrete and #4 rebar, with the meter located no less than 18 inches off the floor. In addition, all commercial meters shall have a bypass piping arrangement approximately one size smaller than the meter to facilitate meter removal. This bypass valving shall bypass the meter, but not the backflow prevention device. If a bypass device is installed on the backflow prevention device, then a separate backflow prevention device should be installed on that bypass.

Meter boxes should generally be placed eighteen inches (18”) inside the adjacent utility easement that parallels the right-of-way. Where sidewalk is installed, two feet (2’) of clearance is required between the customer’s side of the sidewalk edge and the meter box. In developments where the property line is not clearly defined (e.g., condominiums) the meter box should be placed for ready access as approved by AUD. Meter boxes and control valves shall be accessible and unobstructed for four feet (4’) in all directions. This shall include but not be limited to transformers, telephone junction boxes, walls, trees, etc. Meters boxes shall not be placed in areas that can be fenced, such as a backyard, and shall not be placed in any asphalt or concrete surfaced areas unless approved in writing by AUD. For shopping centers,

the developer's engineer should give special consideration to meter layout so as to satisfy these requirements. When no alternative is available but to locate in asphalt, the top of box shall be flush with the asphalt surface. Meter boxes shall not be located in low areas that normally receive storm water. The box shall also be located outside of parking stalls. The box and lid should be traffic bearing, but located outside of a commonly trafficked area. Valves shall have concrete donuts when not in asphalt or sidewalk.

Meters will be installed by AUD at the time service is required at the stub-out, and will remain the property of AUD. Areas that are privately owned where AUD does not own water or sewer utilities may be master metered. Each unit within a residential building (i.e., duplex, triplex, etc.) shall have a separate meter, unless prior approval is received from the Utilities Director. The proper sizing of service lines is the responsibility of the design engineer, and AUD takes no responsibility for improperly sized meters or the problems associated with them. Meters will be available in the following sizes: $^{5}/_{8}$x$^{3}/_{4}$, 1, 1½, 2, 3, 4 -inch, and larger standard sizes as necessary. AUD reserves the right to request historical data for meter sizing.

14.2.2.2.11 Valves, Fittings, and Appurtenances

Valving of all water distribution systems shall be designed to facilitate the isolation of each section of pipeline between intersections of the network. In high density areas (25 dwelling units), valves shall be installed as necessary to minimize the number of persons affected by a water main break. Gate valves, 4 inches to 18 inches, shall be U.S. Pipe Metro-Seal 250 resilient seated gate valve, or equivalent, and must conform to AWWA C509 (latest version). Valves larger than 18 inches shall be gear operated butterfly valves, conforming to AWWA C504 (latest version). Wafer valves will not be accepted. Valves shall generally be installed at intervals of not more than 3,000 LF on transmission mains and on all primary branches connected to these mains. Placing an in-line valve in close proximity to every third fire hydrant is recommended for locating purposes.

The Utilities Director shall determine whether mains are distribution or transmission.

Valves shall **OPEN LEFT** if installed south of Gordon Highway (SR 10), or **OPEN RIGHT** if installed north of Gordon Highway. Valves shall be provided with valve stem extensions to within 6 inches of ground surface, where centerline of pipe to grade is greater than 4 feet.

Valve boxes shall be M&H E-2702, Mueller H10364 or approved equal. Each valve box shall be adjustable for a minimum cover of 3 feet. The flanged base of the valve box shall be at least six (6) inches above the pipe so not to stress water lines 4" and smaller. Extension pieces will be required for additional depth over valves. Extensions shall be M&H E-3120 or Mueller H-10375. Covers shall have "WATER" cast on top.

All valves, bends, tees, crosses and dead ends shall be restrained by retainer glands, restrained gaskets, or by use of a concrete thrust block in those instances that warrant such an installation.

Standard pressure pipe fittings of size four (4) inch ID and larger shall be ductile iron conforming to AWWA C153 (latest version), with mechanical joints unless flanged or restrained joints are required. Gray cast-iron fittings are not allowed. Ductile iron fittings shall be epoxy coated in accordance with AWWA C116 (latest version). Mechanical joint fittings, 24 inches and smaller shall be rated for 350 psi minimum working pressure, while all fittings

between 30 and 48 inches shall be rated for 250 psi minimum working pressure. Mechanical joint fittings 54 through 64 inch shall be rated 150 psi minimum working pressure. Glands for mechanical joint fittings shall be ductile iron. Only bolt systems furnished by the manufacturer for mechanical joints are acceptable; nuts and bolts shall be new, not reused. Pipe gaskets shall be new as supplied by the pipe manufacturer. For sizes less than four (4) inch ID, fittings shall be suitable to the pipe material and application.

For flanged pipe, flanges shall be ductile iron Class 150, ANSI B16.5. Flanged joint fittings 14 inches and smaller shall be rated for 350 psi minimum working pressure, and flanged joint fittings between 14 and 48 inches shall be rated for 250 psi working pressure. All flanges shall be flat faced. Full face, 1/8 inch black neoprene gaskets shall be used on all flanged joints. All joints shall conform to AWWA C115 (latest version). Bolts, nuts and washers for flanges shall be hot dip galvanized, except tee-bolts shall be Cor-Ten steel.

14.2.2.2.12 Fire Hydrants

Fire hydrants shall be provided in all water mains, transmission and distribution systems. Accepted models are Mueller #A-24018, M&H Figure 129T, AWWA Compression-Type Dry-Top Traffic Model, of 150 psi working pressure, and 300 psi testing pressure. Kennedy K-81D will also be accepted. All fire hydrants shall be ordered all yellow. Fire hydrants shall be spaced such that the radius of protection will not be more than 500 feet. In certain areas, closer spacing may be required by the Fire Marshal.

Each hydrant shall be left turn opening and capable of delivering a flow of at least 500 gallons per minute with a residual design pressure of not less than 20 psi during maximum day demand, or a higher flow as required by the Fire Marshal. Multiple fire hydrants with looped mains and/or larger main sizes may be required to provide water for higher flow demand. Flow tests shall be performed to verify the specified fire flow demand.

Fire hydrants shall be of the dry barrel break-away type conforming to AWWA C502 (latest version), with two 2 ½ inches threaded hose nozzles and one 4 ½ inch threaded pumper nozzle. Hose and pumper nozzle threading shall be national standard. Shoe connection shall be 6-inch mechanical joint. The center line of the nozzles shall be 18 inches above the finish grade. Hydrants shall have a 5¼ inch interior valve opening. Hydrants shall be restrained from hydrant to tee at the main and have a concrete thrust block poured behind them. At the discretion of the Utilities Director, additional protection for fire hydrants shall be provided including but not limited to concrete filled ductile iron traffic posts surrounding each hydrant.

Fire hydrant branches (from main to hydrant) shall be a minimum of 6 inches ID. Each branch shall be provided with a resilient seat gate valve located as close as possible to the main. Hydrants shall be located at or near road right-of-way lines with pumper nozzle pointing toward the road. A clear zone around all fire hydrants shall be adhered to, consisting of a 5 foot radius around the hydrant and 7 feet above the top of the hydrant. Maintain 15 feet minimum from hydrant to all structures. Placement of landscaping, fencing, etc. shall be considered in order to meet this clear zone requirement.

14.2.2.2.13 Backflow Prevention Devices

Backflow prevention devices shall be provided, as required by the Utilities Director and as set forth in these Standards. All irrigation systems, water services and fire lines for industrial, office, commercial, schools, mobile home parks, multi-family residences and any other locations as determined by the Utilities Director shall require a minimum of a double-check backflow prevention assembly. In addition, based on the degree of hazard present, AUD may require a reduced pressure (RPZ) backflow prevention assembly on the customer side of service lines (domestic, irrigation, and fire). A certified person shall test backflow devices and the results furnished to AUD prior to any water use. Residential development shall install a "Dual-Check" backflow device on the customer's side of service line at the point of tie-in to the water meter. Lawn irrigation systems shall have a minimum of a double-check valve backflow prevention device per the 2002 Georgia Plumbing Code (DCA, 2000). The plumber or builder tying service into the set meter will submit the test results for the backflow prevention device to AUD's Backflow Prevention Section prior to acceptance and any water use.

Backflow prevention device assemblies shall be the latest approved product of a manufacturer regularly engaged in the production of this type equipment. All assemblies shall be as approved by the America Society of Sanitary Engineering (ASSE), The American National Standards Institute (ANSI), The American Water Works Association (AWWA), Foundation for Cross Connection Control and Hydraulic Research of the University of Southern California, and the Georgia State Plumbing Code.

Type and size of all assemblies shall be indicated on the drawings.

Backflow prevention device ownership and maintenance responsibilities shall be as set forth in the appropriate ordinances. The Owner shall document yearly that a qualified technician has tested and inspected the backflow prevention device and that the device has passed inspection. A copy of the technician's certification must be attached to the test results and submitted to the AUD's Backflow Prevention Section. The Engineer must comply with AUD Policies and Procedures for Backflow Prevention by Containment (latest version). A copy of this manual is available upon request from AUD.

14.2.2.2.14 Fire Lines

All fire lines shall have a minimum double-detector check valve assembly (detector check valve with a 5/8 inch by-pass meter to detect low flows) within the right-of-way or dedicated easement. No exceptions to the by-pass meter requirement shall be made regardless of sprinkler system type, configuration, etc. Certain types of fire lines will require RPZ check-valve. Please contact AUD's backflow prevention section to determine actual requirements.

14.2.3 Construction Guidelines for Water Distribution Systems

14.2.3.1 Deviation from Plans

During construction when deviations from approved plans are desired, the AUD's Inspector shall be notified. Revised plans shall be submitted from the design engineer as soon as possible to the AUD for approval. Minor changes not affecting capacities, flows or operation may be allowed in the field during construction by AUD's Inspector. The Inspector shall have authority as to what constitutes a minor or major change. An approved set of red-line drawings (section 14.1.3.5) clearly showing any changes shall be submitted to the AUD Inspector at the completion of the work and prior to sign-off of the final plat.

The Contractor/Developer is responsible for verifying the exact location, size and material of any existing water facility proposed for connection or use by the project. No publicly owned water line shall be uncovered without prior coordination with AUD.

14.2.3.2 Erosion and Sedimentation Act Compliance
All phases of construction shall be completed in accordance with the Erosion and Sedimentation Act 12-7-1 et seq.

14.2.3.3 Work Conducted in Rights-of-way
Where a traffic control plan is required, it shall be in accordance with Augusta Public Works Rights of Way Encroachment Guidelines.

14.2.3.4 Water Distribution System Installation
Authorization must be obtained from AUD to construct, alter or modify a water line. Construction of water infrastructure will be authorized by the Utilities Department upon approval of submitted plans and notification of AUD at least 48 hours prior to starting construction (706-312-4132).

Installation of water mains and associated appurtenances shall be in accordance with current AWWA specifications and manufacturer's requirements for the specific product. Loading or unloading and storage of pipe, fittings, valves, etc. shall be done in such manner as to avoid damage. The interior of all pipe, fittings, valves, etc. shall be kept free of dirt and foreign matter at all times. All piping shall be placed in a dry trench with a stable bottom. Wet trench installation shall be allowed only upon approval of AUD.

Restrained joints shall be required at each fitting involving a change of direction and on surrounding pipe, as specified in the approved plans. Concrete thrust blocks can be allowed in lieu of mechanical restraint systems, as approved by AUD.

Backfill shall be free of boulders and debris, and shall conform to Georgia Department of Transportation Specifications. Sharp or rocky material encountered in the base shall be replaced with proper bedding. Pipe shall be laid on line and grade as designed. Pipe joints, gravity blocks, service connections, and conflicts shall be left exposed until visually inspected and approved by the AUD's Inspector.

Fire hydrants shall be installed true and plumb with the center of the pumper nozzle facing toward the road according to Section 14.2.2.2.12. Hydrants shall not be placed in the sidewalk.

All valves shall be placed according to plans. Valve stems shall be installed plumb. Valve stem extensions are required as described in Section 14.2.2.2.11. Air relief valves shall be installed at all high points in the water main where air can collect, as shown on the plans or as directed by Augusta Utilities.

The following guidelines shall be followed during the construction of water mains:

14.2.3.4.a Handling and Storing of Materials: Unload pipe so as to avoid deformation or other injury thereto. Place no pipe within pipe of a larger size. Store pipe and

fittings on sills above storm drainage level and deliver for laying after the trench is excavated. Valves shall be drained and stored to protect them from freezing.

14.2.3.4.b Pipe Laying (General): The interior of the pipe shall be clean and joint surfaces wiped clean and dry when the pipe is lowered into trench. Lower each pipe, fitting and valve into the trench carefully and lay true to line and without objectionable breaks in grade. The depth of cover below finished grade shall be not less than 3 feet, or as shown on the drawings. Give all pipes a uniform bearing on the trench bottom. Allow no trench water or dirt to enter the pipe after laying. Insert a watertight plug in the open end of the piping when pipe laying is not in progress. Water pipe shall be bedded when required by poor soil conditions (AUD-Detail 8).

14.2.3.5 Pressurization and Leakage Testing

After installation, all water mains shall be leak tested, in accordance with AWWA C-600, Section 4.1 (latest version) for DIP, and C605, Section 7 for PVC. The Contractor/Developer shall provide all equipment, materials and labor necessary for pressure and leak testing. This test must be observed by an Augusta Utilities Department representative. A pumping pressure of 200 psi, or 1.5 times the working pressure at the point of testing depending on the discretion of an AUD reprsentative, must be supplied at the expense of the Contractor/Developer. The main tested shall either be isolated from active potable lines or protected from leakage by a double valve arrangement. All water used for pressure testing must be potable water with adequate chlorine residual. Water lines shall be tested by valve sections. Maximum allowable leakage shall be as determined in accordance with current AWWA specifications. The standard duration of test is four (4) hours. Testing procedures shall meet or exceed AWWA C600 (latest version) requirements. Any portions of the main which fail the test shall be replaced or adjusted until the entire new main passes the test criteria. Concurrent with the pressure test, and before any work will be accepted for payment, the Contractor shall perform a leakage test. Leakage is defined as the quantity of water to be supplied into the newly laid pipe, or any valved section thereof necessary to maintain the water pressure to within 5 psi of the test pressure. No pipe installation will be accepted until the leakage is less than the number of gallons per hour as determined by equation 1 from AWWA C600 for DIP:

$$L = \frac{SD\sqrt{P}}{133200}$$

Where L = allowable leakage in gallons per hour, S = the length of pipe in the section tested, D = the nominal diameter of the pipe in inches, P =the average test pressure during the leakage test in pounds per square inch gauge. For PVC pipe, the following equation shall be used:

$$L = \frac{ND\sqrt{P}}{7400}$$

where N = Number of joints in the pipeline being tested.

14.2.3.6 Connecting to Existing Systems

All connections to existing mains shall be made under the direct supervision of the AUD's Inspector. Valves on existing mains shall be operated by or under direct supervision of AUD personnel. Tapping sleeves and valves shall be pressure tested prior to tapping. If service to existing customers must be interrupted, AUD shall be notified at least three (3) days (72 hours) in advance. The contractor shall make the necessary notifications to the customers. The new line shall be chlorinated for up to three (3) days and then drained and bacteria tested. Only after maintaining the appropriate chlorine residual and passing the bacteriological test shall the line be put into service, at the direction of AUD.

If cut-off of service is required, the Contractor shall be ready to proceed with as much material pre-assembled as possible at the site to minimize the length of service interruption. Augusta Utilities reserves the right to postpone service cut-off if, in the opinion of the Utilities Director, the Contractor is not ready to proceed on schedule. Scheduled interruptions should not exceed four (4) hours. The Contractor/Developer shall arrange for temporary services to Customer(s) if water will be shut off for more than four hours.

Local chlorination will be required for all pipe and fittings used to complete connections with the potable water system. Tapping sleeves and valves shall be chlorinated in accordance with AWWA requirements. All wet taps shall be witnessed by the AUD's Inspector.

14.2.3.7 Cleaning and Flushing

Upon completion of installation, the mains shall be flushed and the water disposed of without creating a nuisance. Flushing must achieve a minimum water velocity of 2.5 fps in all portions of the pipe. The duration of the flushing will be determined by the AUD's Inspector. No flushing or cleaning shall take place without an Augusta Utilities representative present. The existing mains where the new mains connect may require flushing under the direction of AUD when service is restored. The Contractor shall be responsible for the treatment of discharge and disinfection water. All flushing activities shall be in accordance with AWWA C651.

14.2.3.8 Disinfection

Augusta Utilities shall be notified at least 24 hours in advance to schedule bacteriological testing of water mains. The Contractor shall replace or adjust components of the pipeline which fail the test. Clearance is required from the Utilities Department before AUD will allow the main to be put into service.

All piping complete with fittings and appurtenances shall be sterilized as specified in the applicable sections of AWWA Specification C651 (latest version) "Disinfecting Water Mains." Piping and appurtenances shall be thoroughly flushed then chlorinated with not less than fifty parts per million (50 ppm). Calcium hypochlorite can be used. Water from the existing distribution system or other source of supply should be controlled so as to flow slowly into the newly laid pipeline during the application of chlorine. The solution should be retained in the pipeline for not less than 24 hours and the system shall maintain the chlorination level originally introduced into the line, which should not be less than 50 ppm. The system shall then be flushed with potable water and the sampling program started. A minimum chlorine residual of 1.0 ppm should be available in the line after flushing.

Sampling taps and chlorinated water used for disinfection shall be flushed to a location that will not damage property, persons, etc., and shall be provided by the Contractor/Developer at the expense of the Contractor/Developer. The provisions of this paragraph apply equally to new pipe and fittings and to existing pipelines into which connections have been made or which may have been otherwise disturbed to the extent that contamination may have occurred. All requirements of the health authorities shall be observed in executing this work. The disposal of heavily chlorinated water (following disinfection) must be accomplished in accordance with the latest editions of the AWWA Standard C651 and the EPD's Minimum Standards for Public Water Systems. No dry chlorine shall be placed in the pipes while installing.

A minimum of two samples tested by a State approved private lab, shall indicate bacteriologically satisfactory water and the results shall be submitted to the Inspector.

14.2.4 Measurement and Payment

An AUD standard bid schedule and standard payment sheet are available as part of the standard contract documentation. Please contact AUD by phone at 706-312-4132 for copies of this information.

14.3 WASTEWATER COLLECTION SYSTEMS DESIGN AND CONSTRUCTION

14.3.1 Design Guidelines

A Professional Engineer registered in the State of Georgia must prepare the plans and specifications. The design must conform to the requirements set forth in "Recommended Standards for Wastewater Facilities" (latest version) published by the Great Lakes-Upper Mississippi River Board of State and Provincial Public Health and Environmental Managers, and must follow EPD guidelines.

Before a sewer is designed, the area to be served should be studied for the purpose of estimating the type and quantity of flow to be handled. Design should be considered for the ultimate tributary population. Consideration should be given to the maximum anticipated capacity of institutions, industrial parks, etc. Where future relief sewers are planned, economic analysis of alternatives should accompany initial permit application. Design pipe capacity should be based on peak sewage flows plus the anticipated maximum infiltration/inflow levels under normal open channel flow conditions. The average daily flow of the tributary areas must be stated by the design engineer.

The design engineer shall provide the owner with the calculations supporting the recommended design in the form of a written concept report. The report should summarize the work performed to arrive at the peak flow calculations. A "peak flow summary schematic" shall accompany the report. This schematic shall be in the form of a plan layout sheet and include the following at a minimum: surrounding basin and subbasin limits, hydrology including creeks, lakes, swamps, marshes, and roads, railroads, parcels, topography lines, surrounding wetlands, recommended sewer layout, and peak flow amounts at the lower point of each basin.

All food service operations are required to install, operate, clean, and maintain sufficiently sized oil and grease separators (grease traps) to prevent obstruction or interference with the proper operation of the wastewater collection system and treatment plants.

No gravity-fed sewer lines less than eight (8) inches in diameter may be installed. Sanitary laterals with clean-outs shall be installed at ALL service tie-ins to the system.

14.3.2 Design and Construction Specifications

14.3.2.1 Spatial Guidelines

14.3.2.1.1 Cover

Minimum cover to finished grade over wastewater collection lines shall be four (4) feet, and maximum cover shall be twenty (20) feet, unless otherwise approved by AUD. Any exceptions must be approved by AUD engineering prior to construction. AUD reserves the right to reject proposals with less than four (4) feet of cover.

14.3.2.1.2 Horizontal Separation

Horizontal separation distances are as follows, with distances listed from edge to edge of listed items.

14.3.2.1.2.a Ten (10) feet to water lines and storm sewer lines.

14.3.2.1.2.b Fifteen (15) feet to buildings, top of bank of lakes/streams/creeks, other structures (10 feet absolute minimum – only when unavoidable, and pipe material is required to be DIP).

14.3.2.1.2.c Ten (10) feet minimum separation to gas mains.

14.3.2.1.2.d Ten (10) feet minimum to underground electric cable.

14.3.2.1.3 Vertical Separation

Eighteen (18) inch minimum separation (edge to edge) between all pipes and cables shall be maintained, with a six-inch (6”) absolute minimum separation with DIP.

14.3.2.1.4 Layout

Layout of the sanitary system shall follow these guidelines:

14.3.2.1.4.a All manholes constructed outside the right of way shall be elevated two feet above the ground surface.

14.3.2.1.4.b All manholes constructed within the 100 year flood plain shall be elevated a minimum of 4 feet above the ground surface and include a water-tight ring and cover.

14.3.2.1.4.b Wastewater easements shall be a minimum of twenty (20) feet wide with the sewer line centered in the easement.

14.3.2.1.4.c Individual sewer services shall be a minimum of six (6) inches in diameter and shall extend from the main and terminate with a clean-out constructed at the edge of right-of-way. If the main is installed outside of the right-of-way, the services with clean-outs shall terminate at the edge of the permanent easement. All lines eight (8) inches in diameter and larger shall terminate in a manhole. The required service lateral with clean-out shall be inspected by the Augusta Utilities Inspector prior to physical tie-in of private service line. The services shall be installed as deep as possible. Tying into the stack pipe of the clean-out is strictly prohibited unless written authorization is obtained from AUD. The use of donuts is required.

14.3.2.1.4.d Sewer lines installed parallel to lakes/streams/creeks shall be designed to leave a 25-foot minimum undisturbed buffer along the edge of the bank.

14.3.2.1.4.e Under no circumstances shall house sewer services and water services be laid in the same trench.

14.3.2.1.4.f Manhole spacing shall not exceed 400 LF for sewers 15 inches in diameter or smaller, and 500 feet for sewers 18 inches to 30 inches.

14.3.2.1.4.g Manholes shall be located at the junction of sewers and at changes in grade, pipe size, or alignment. They shall also be installed at all intersections.

14.3.2.1.4.h Wastewater manholes should not be located where surface water can drain into the manhole. When this is not possible, a watertight cover shall be specified. For this purpose, and also for assisting in locating manholes across country, the rims shall be set above grade.

14.3.2.1.4.i A drop manhole shall be provided for a sewer entering a manhole at an elevation of 24 inches or more above the manhole invert. Where the difference in elevation between the incoming sewer and the manhole invert is less than 24 inches the invert shall be filleted to prevent solids deposition.

14.3.2.1.4.j Minimum angle between influent and effluent wastewater lines at a manhole shall be ninety (90) degrees.

14.3.2.1.4.k Both vertical and horizontal alignments shall be reviewed with AUD prior to finalization.

14.3.2.1.4.l Where indicated on the plans, pipe stub-outs for the connection of future sewers shall be provided during the construction of new manholes. Each stub-out shall be plugged in the bell end of the stub-out with a plug approved by Augusta Utilities.

14.3.2.1.4.m The maximum slope for a wastewater line shall be 20%. All 20% sewers shall be DIP with concrete collar walls at every joint or alternate restraining system provided by design engineer. Slopes less than 20% are preferred. If steep slope is necessary, an AUD Engineer must approve the design.

14.3.2.1.4.n Buoyancy of sewers shall be considered and flotation of the pipe shall be prevented with appropriate construction where high groundwater conditions are anticipated.

14.3.2.2 Design Parameters

Design parameters for wastewater collection systems are included in Table 1:

Table 1: Design parameters for wastewater for Augusta Richmond County.

Parameter	**Value**
Per Capita Flow, Average	125 gallons per day (gpd)
Minimum velocity in collector sewer	2.0 feet per second (fps)
Maximum velocity in collector sewer	10.0 feet per second (fps)
Minimum collector sewer size	8 inch
Infiltration Allowance	25 gpd/in Dia/mile
Ratio of Peak to Average flow	2.5
Design depth of flow at Peak Flow	0.75 of Full
Design Period	30 Years
Minimum Manning's "n" Factor	0.014

Table 2 contains minimum slope for representative pipe sizes.

Table 2: Minimum Slope per Pipe Size.

Pipe Inside Diameter (inches)	Minimum Slope in Percent (%)
8	0.400
10	0.28
12	0.220
14	0.170
15	0.150
16	0.140
18	0.12
21	0.100
24	0.080
27	0.067
30	0.058
33	0.052

36	0.046
39	0.041
42	0.037

14.3.2.3 Lift Station Design

All lift stations shall be installed underground, unless otherwise directed by the Utilities Director. Wet well size and pump sizing shall be determined by a professional engineer, after a comparative study has been done of the area surrounding the proposed construction. Potential future development of the surrounding area should be incorporated into the design. All potable water services around sewage pumping facilities shall be provided with an approved reduced pressure zone backflow prevention (RPZ) device. Please refer to the Recommended Standards for Wastewater Facilities (latest version) for additional information.

The following guidelines apply to lift station design:

14.3.2.3.a Pumps, valves, and pipe sizes shall be designed by a professional engineer, and should be capable of providing a minimum flow rate of 2 fps per AUD specifications. Calculations for the design shall be submitted to AUD for review and approval. Pump specifications shall be provided to Augusta Utilities for review.

14.3.2.3.b Valves shall have a minimum of a 18-inch clearance in all directions.

14.3.2.3.c All pipes entering the wet well and discharging from the wet well into the valve pit shall be mechanical joint DIP. PVC pipe will not be permitted.

14.3.2.3.d For dry wells, the valve pit shall consist of a precast manhole cone section or a precast concrete box. The bottom shall have 2-inch diameter pre-drilled holes filled with gravel for drainage.

14.3.2.3.e A cone section shall be set on a minimum 4-inch thick concrete slab with an open bottom and gravel for drainage. For proposed piping, the manhole shall have cored holes fitted with flexible rubber boots. Standard ring and cover shall be installed and grouted to the cone section. The top of the valve pit shall be a minimum of six (6) inches above finished grade.

14.3.2.3.f Electrical systems and components (e.g., motor, lights, cables, conduits, switch boxes, control circuits, etc.) in raw wastewater wells, or in enclosed or partially enclosed spaces where hazardous concentrations of flammable gases or vapors may be present, shall comply with the National and the Augusta, Georgia Electrical Code requirements. In addition, equipment located in the wet well shall be suitable for use under corrosive conditions. Each flexible cable shall be provided with a watertight seal and separate strain relief. A fused disconnect switch located above ground shall be provided for the main power feed for all pumping stations. When such equipment is exposed to weather it shall meet the requirements of weatherproof equipment. The control panel shall be duplex NEMA 4X with audible and visible alarms. Lightning and surge protection systems should be considered. A 110 volt power receptacle to facilitate maintenance shall be provided inside the control panel for lift stations that have control panels outdoors. Ground fault interruption protection shall be provided for all outdoor outlets.

14.3.2.3.g A location for permanently-installed or portable engine-driven generating equipment must be in the plans for emergency operation of all lift stations.

Generating unit size shall be adequate to provide power for pump motor starting current and for lighting, ventilation, and other auxiliary equipment necessary for safety and proper operation of the lift station. Augusta will approve allowance for the operation of only one pump during periods of auxiliary power supply. Special sequencing controls shall be provided to start pump motors unless the generating equipment has the capacity to start all pumps simultaneously with auxiliary equipment operating. Where portable generating equipment or manual transfer is provided, sufficient storage capacity with an alarm system shall be provided to allow time for detection of pump station failure and transportation and connection of generating equipment. Special electrical connections and double throw switches shall be installed at all lift stations where emergency power will be provided by portable generating equipment. Design engineer and/or contractor shall coordinate type and size of all permanent or portable generators with City of Augusta prior to lift station construction.

14.3.2.3.h Wastewater pumping stations and portable equipment shall be supplied with a complete set of operational instructions, including emergency procedures, maintenance schedules, tools and spare parts as may be necessary.

14.3.2.3.i A grit separator shall be provided in the design.

14.3.2.3.j Gate valves shall be installed to allow for bypass pumping of the facility.

14.3.2.4 Materials and Methods

14.3.2.4.1 Wastewater Collection Pipe Materials

14.3.2.4.1.1 General Requirements

Pipe for wastewaters shall be polyvinyl chloride (PVC) or ductile iron pipe (DIP) as outlined below. However, DIP is considered a required measure for special applications only. Standard pipe lengths not greater than 20 feet shall be used. Force main pipe shall be of approved C900-CL200 PVC water pipe or ductile iron pipe conforming to AWWA C150 & C151 (latest version).

PVC pipe shall be manufactured from virgin resin conforming to ASTM D-3034 (latest version) with minimum classification of SDR-35 for pipes less than 15” diameter and SDR-26 for pipes greater than 15” diameter. PVC shall be jointed with a rubber gasket and shall conform to ASTM F477 (latest version) and manufacturer’s recommendations. Solvent weld is prohibited

DIP shall be epoxy-lined and conform to AWWA C151/ANSI A21.51 (latest version). Design methods shall conform to AWWA C150/ANSI A21.50 (latest version). DIP shall be pressure class 350 for 16” and smaller. DIP shall be of the bell and spigot type with push-on joints conforming to ANSI A21.11 (latest version) or with restrained joints where the application requires restraint.

All fittings shall be of the same quality and material as the pipe to be used. Pipe classes shall be determined based upon the installation and the use intended. Pipe shall be appropriately labeled on the drawings. WYE fittings shall be utilized. TEE fittings and saddles shall not be allowed. All DIP fittings shall be ductile iron.

Aerial pipe shall be mechanical joint DIP or continuous weld, wrapped and coated steel pipe. Piers shall be placed at every joint directly behind the bell. Site conditions may dictate

construction utilizing more stringent requirements than indicated in the standard detail. Anchor collars shall be constructed on the pipe whenever pipe grade is 20% or greater. Restrainers may be used in lieu of collars when a particular brand and method are determined equivalent.

14.3.2.4.1.2 Applications that Require DIP

DIP shall be required in the following circumstances:

14.3.2.4.1.2.a When wastewater line has less than four (4) feet of cover. Minimum depth of cover for DIP is two (2) feet. Concurrence of the AUD engineering department must be obtained prior to constructing wastewater line with such shallow cover.

14.3.2.4.1.2.b When a wastewater line crosses over storm pipe (Must be one joint of DIP centered on the crossing)

14.3.2.4.1.2.c When a wastewater line passes laterally within one (1) foot of a storm sewer line (Must be one joint of DIP centered on the crossing).

14.3.2.4.1.2.d When a wastewater line is to have in excess of eighteen (18) feet of fill.

14.3.2.4.1.2.e When a wastewater line is at the maximum slope of 20%.

14.3.2.4.1.2.f For last joint of pipe at all drop manholes greater than three (3) feet.

14.3.2.4.1.2.g When a wastewater line is less than six (6) feet under a street.

14.3.2.4.1.2.h The Utilities Director may mandate DIP in any instances of off-site or on-site construction where future abuse to the line is possible due to location or circumstances, extensive length under pavement, or in private property away from right-of-way areas.

14.3.2.4.2 Tie-Ins

14.3.2.4.2.1 New Sewer Systems

New sewer mains shall be tied-in to the existing sewers at locations indicated on the plans. No lines smaller than six (6) inches shall be tied to a sewer line or manhole. All tie-ins to existing manholes shall be cored. The Contractor shall be responsible for maintaining uninterrupted service of the wastewater during tie-in operations. No connection to existing wastewater facilities shall be allowed until the proposed sewer line is inspected and approved by AUD's Inspector.

14.3.2.4.3 Wastewater Collection Lines

14.3.2.4.3.1 Wastewater Line Bedding:

Bedding requirements shall apply to wastewater lines only. They are considered minimum bedding requirements and as such, do not relieve the Engineer/Contractor of the responsibility to provide any additional bedding necessary for proper construction.

Bedding shall be carefully placed along the full width of the trench so that the pipe is true to line and grade of the pipe barrel. Bell holes shall be provided so as to relieve pipe bells of all load, but small enough to ensure that support is provided throughout the length of pipe. Crushed stone embedment material shall conform to ASTM C33, Graduation #57 (GA DOT STD 800.1). Bedding material shall be placed underneath and be carried up the sides of the pipe as specified below.

Class B Bedding shall be performed by first undercutting the trench an adequate amount to provide bedding under the pipe bell. The trench shall then be brought to grade with compacted crushed stone as specified above for the full width of the trench. The bedding material shall be

placed in the zone four (4) inches below the pipe and the pipe laid to line and grade and backfilled with compacted crushed stone placed the full width of the trench up to one-half the outside diameter of the pipe. Select backfill placed in six (6) inch layers and compacted shall be the backfill from the springline of pipe to 18 inches above the pipe. A minimum Class B Bedding shall be used for all plastic pipes.

Class C Bedding shall be performed by first undercutting the trench an adequate amount to provide bedding under the pipe bell. The trench shall then be brought to grade with compacted crushed stone as specified above for the full width of the trench. The bedding material shall be placed in the zone four (4) inches below the pipe and the pipe laid to line and grade and backfilled with compacted crushed stone placed the full width of the trench up to one-fourth the outside diameter of the pipe. Select backfill placed in six (6) inch layers and compacted shall be the backfill from the bedding material to 18 inches above the pipe. A minimum Class C Bedding shall be used for all ductile iron pipes when required by AUD.

14.3.2.4.3.2 Laying Belled Pipe
Belled pipe shall be laid with the bell end up grade and in general, all pipe laying shall start and proceed up grade from the point of connection at the sewer line or other starting point. Pipe shall be laid in a straight line at a uniform grade between manholes.

14.3.2.4.3.3 Transitions
Material for transition (e.g., PVC to DIP) shall be indicated and specified. Where offset of DIP is required, restrained joint DIP shall be installed.

14.3.2.4.3.4 Backfilling Around Pipe
As soon as the joint material has set, fine earth shall be carefully tamped around each joint, and around and over the pipe to a depth of at least 2 feet above the top of gravity pipelines. Selected materials for this purpose shall be Class I or II soils as specified in ASTM D2321. Reconstruction of any roadway section or right-of-way shall be in accordance with the Georgia Department of Transportation and Augusta, Georgia Specifications (AUD- Detail 18).

14.3.2.4.3.6 Boring and Jacking
Jacking and boring for water and sewer lines is covered in section 14.2.2.2.4.

14.3.2.4.4 Wastewater Manholes:
14.3.2.4.4.1 General Guidelines
The elevation drop across the manhole inverts shall be 0.1 feet unless otherwise approved by AUD.

Precast manholes shall conform to the latest edition of ASTM C-478 (five inch wall thickness). Use six (6) inch wall thickness if manhole exceeds 20 feet in depth. All holes for incoming and outgoing pipe will, whenever possible, be precast, with pipe tie-in made using PS10 flexible gasket, manufactured by PressSeal Gasket Corporation, or approved equal. In the event of the necessity of cutting new holes, the holes shall be machined cored neatly and carefully so as not to damage the structural integrity of the manhole and large enough to allow the insertion of a flexible rubber boot. Precast holes shall be flexible boot fitted.

Barrel joints shall be tongue and groove with preformed plastic meeting the requirements of Federal Specifications SS-S-00210, "Sealing Compound, Preformed Plastic Pipe Joints" Type I, rope form, also known as "Ram Neck." Eccentric manholes cones are required. Inverts shall be constructed of 3,000 psi plant mix. Manhole steps shall be installed in all sections of each manhole as indicated on the drawings. Frame and covers shall be cast or ductile iron and set in a bed of mortar on the top of the manhole and completely grouted outside and wiped smooth. Offsite rings and covers shall be integrated into the cone. Ring and cover shall be USF-668 or approved equal. Cover shall read "Wastewater." Watertight manhole covers are to be used wherever street runoff or high water may flood the manhole tops. Locked manhole covers may be may be desirable in isolated easement locations or where vandalism may be a problem.

Additional manhole guidelines are as follows:

14.3.2.4.4.1.a Where corrosive conditions due to septicity or other causes is anticipated, consideration shall be given to providing corrosion protection on the interior of the manholes.

14.3.2.4.4.1.b The minimum diameter of manholes shall be 48 inches; larger diameters are required for large diameter sewers. A minimum access diameter of 22- ¼ inches shall be provided.

14.3.2.4.4.1.f A bench shall be provided on each side of any manhole channel (ref AUD-Detail 2) when the pipe diameter(s) are less than the manhole diameter. The bench should be sloped no less than ½ inch per foot (4 percent). No lateral sewer, service connection, or drop manhole pipe shall discharge onto the surface of the bench.

14.3.2.4.4.2 Manhole Inverts

Manhole flow channels shall be constructed of concrete, sewer pipe, brick or precast, and shall be of semicircular section. Each manhole shall be provided with such channels for all connecting sewers.

The inverts shall conform accurately to the size of the adjoining pipes. Side inverts shall be curved and main inverts where direction changes shall be laid out in smooth curves of the longest possible radius which is tangent to the centerlines of adjoining sewers.

14.3.2.4.4.3 Drop Manholes

Drop inlets shall be provided into manholes on wastewaters for incoming lines having inverts two (2) feet or more above the inverts of the manhole outlet lines. Drop pipe and fittings shall be encased in masonry integral with the manhole and extending from the manhole base to the top of the incoming sewer. Diameter of drop manholes shall be four feet at a minimum (AUD-Detail1).

14.3.2.4.4.1.c Outside drop manholes shall be precast and constructed for incoming lines having invert 24 inches or more above the invert of the manhole outlet, with DIP and tie rods per AUD-Detail 1. Shallow manholes shall be precast or Type B slab top precast and shall be constructed in accordance with ASTM C-478 (latest version).

14.3.2.4.4.1.d Drop manholes should be constructed with an outside drop connection. Inside drop connection (when necessary) shall be secure to the interior wall of the manhole and provide access for cleaning. Inside drop connections shall be used only when approved by the Utilities Department Engineering Division.

14.3.2.4.4.1.e Due to the unequal earth pressure that may result from the backfilling operation in the vicinity of the manhole, the entire outside drop connection shall be encased in gravel.

14.3.2.4.4.4 Setting Manhole Frames and Covers

Manhole frames shall be set with the tops conforming accurately to the grade of the pavement or finished concentric with the top of the masonry and in a full bed of mortar so that the space between the top of the manhole masonry and the bottom flange of the frame shall be completely filled and made watertight. A thick ring of mortar extending to the outer edge of the masonry shall be placed all around the bottom flange. The mortar shall be smoothly finished to be flush with the top of the flange and have a slight slope to shed water away from the frame. Manhole covers shall be left in place in the frames on completion of other work at the manholes. Offsite manholes shall have rings and covers integrated into the manhole cone, with watertight fittings.

14.3.2.4.4.5 Setting Precast Manhole Sections

Precast-reinforced concrete manhole sections shall be set so as to be vertical and with sections and steps in true alignment.

All holes in sections, used for their handling, shall be thoroughly plugged with mortar. The mortar shall be 1 part cement to 12 parts sand; mixed slightly damp to the touch until it is dense and an excess of paste appears on the surface; and then finished smooth and flush with adjoining surfaces. Exterior manhole wraps may be required in corrosive soils.

14.3.2.4.5 Sewer Structures

Appurtenant sewer structures shall be constructed according to one or more of the following methods:

14.3.2.4.5.1 Masonry

Brick for manholes and other sewer structures shall be laid with shove joints completely filled with mortar. Horizontal joints shall not exceed 1/2 inch, vertical joints 1/3 inch on their interior face. In circular structures, all brick shall be laid as header with joints broken between courses. Interior joints shall be struck or wiped smooth with the face of the wall. The exterior of wastewater manholes shall be plastered to a thickness of at least 2 inches.

14.3.2.4.5.2 Laying Brick and Concrete Block Work

Only clean brick or block shall be used. The brick or block shall be moistened by suitable means, as directed, until they are neither so dry as to absorb water from the mortar, nor so wet as to be slippery when laid.

Each brick or block shall be laid in a full bed and joint of mortar without repairing subsequent grouting, flushing, or filling, and shall be thoroughly bonded as directed.

14.3.2.4.5.3 Plastering and Curing Brick or Block Masonry

Outside faces of masonry shall be plastered with mortar from 3 inch to 6 inches thick. If required, the masonry shall be properly moistened prior to application of the mortar. The plaster shall be carefully spread and troweled so that all cracks are thoroughly worked out.

After hardening, the plaster shall be carefully checked by being tapped for bond and soundness. Unbonded or unsound plaster shall be removed and replaced.

Masonry and plaster shall be protected from too rapid drying by the use of burlap kept moist, or by other approved means, and shall be protected from the weather and frost, all as required.

14.3.3 Construction Guidelines

14.3.3.1 Deviation from Plans

During construction when deviations from approved plans are desired, the AUD's Inspector shall be notified. Revised plans shall be submitted to AUD as soon as possible for approval after coordination with AUD, the Engineer, and the Contractor. Budgetary items shall be coordinated with AUD prior to beginning revised work. A minor change is one that does not affect capacities, flows or operation and may be allowed in the field during construction by AUD's Inspector. The Inspector shall have authority as to what constitutes a minor or major change. An approved set of red-line drawings (section 14.1.3.5) clearly showing any changes shall be submitted to the AUD Inspector at the completion of the work and prior to sign-off of the final plat, and prior to final payment.

The Contractor/Developer is responsible for verifying the exact location, size and material of any existing wastewater facility proposed for connection or use by the project. No publicly owned water or wastewater line shall be uncovered without prior coordination with AUD.

14.3.3.2 Erosion and Sedimentation Act Compliance

All phases of construction shall be completed in accordance with the Erosion and Sedimentation Act 12-7-1 et seq.

14.3.3.3 Work Conducted in Rights-of-way

All work that occurs in the public rights-of-way shall comply with the Augusta, Georgia Planning Commission "Development Documents" (latest version) and Public Works Department's Right-of-Way Encroachment Guidelines (latest version), and will require an encroachment permit available from APW. Any field changes that occur in the public rights-of-way and which are not specifically related to water or sewer items shall be coordinated with APW. Any work proposed in an Augusta right-of-way shall require a traffic control plan approved by Augusta Public Works two weeks prior to the beginning of construction.

14.3.3.4 Wastewater Collection System Installation

Authorization must be obtained from AUD to construct, alter or modify a wastewater line. Construction of sewer infrastructure will be authorized by the Utilities Department upon approval of submitted plans and notification of AUD at least 48 hours (two working days) prior to starting construction.

PVC gravity sewer pipe and force main shall be installed in accordance to ASTM D2321, latest version. Ductile iron gravity sewer pipe and force main shall be installed in accordance with AWWA C600, latest version.

Loading or unloading and storage of pipe, fittings, valves, etc. shall be done such that to avoid damage. All pipes shall be carefully examined before it is installed in the trench. Damaged pipe or pipe which does not meet specification requirements shall be rejected and removed

from the work site. The interior of all pipe, fittings, valves, etc. shall be kept free of dirt and foreign matter at all times. All piping shall be placed in a dry trench with a stable bottom. Wet trench installation shall be allowed only upon written approval of the Utilities Director.

Backfill shall be free of boulders and debris, and shall conform to Georgia Department of Transportation Specifications. Sharp or rocky material encountered in the base shall be replaced with proper bedding. Pipe shall be laid on line and grade as designed. Pipe joints, gravity blocks, service connections, and conflicts shall be left exposed until visually inspected and approved by the AUD's Inspector.

All concrete cradles, saddles, or encasements shall be installed as shown on the plans. These structures shall be constructed in strict accordance to the details shown on the plans. Concrete shall have a 28 day compressive strength of 3,000 psi when tested in accordance with ASTM Specification C-39.

All manholes indicated on the plans shall be furnished and installed by the Contractor in strict accordance with the plans. The invert channels shall be smooth and accurately shaped to the semicircular bottom conforming to the inside of the adjacent sewer sections as shown on AUD-Details 1-3). Changes in direction of the sewer and entering branches shall have as long a radius of the true curvature as the size of the manhole will permit.

The top of manholes shall be topped out with brick as indicated on the AUD- Detail 1. The number of courses will depend on the required elevation of the top of the manhole. The maximum number of brick courses allowed shall be three (3).

New sewer lines shall be inspected, with an AUD inspector present, by mandrel-pulling, lamp-lighting, and air testing main lines and services, and vacuum testing manholes. In the event that a problem is found, AUD may require use of a camera inspection with an Augusta Utilities Department Inspector present. The Developer will then provide AUD with a color VHS system videotape of the inside of every reach of wastewater line installed. The tape shall record manhole number to manhole number, date of recording, and distance from start of run. The tape shall include a distance and location description of every service line connection installed. The manhole numbering system shall be the same as shown on the approved development plans.

All construction material shall be first quality, not previously used. Repair clamps are not acceptable. Damaged or faulty pipe and materials must be properly replaced. All gaskets shall be new. When connecting to existing valves or fittings, gaskets shall be replaced, not reused.

14.3.3.4.1 Laying Sewer Pipe

The pipe shall be laid with bell or groove end upgrade. Pipe shall be tested for soundness, clear interior and satisfactory joint surfaces before lowering the pipe into the trench. Pipe shall be laid in straight lines and on uniform grades between points where changes in alignment or grade are shown. The pipe barrel shall be uniformly bedded. The line and invert grade of each pipe shall be checked from a top line carried on batter boards not over 25 feet apart or by use of a laser beam target inserted in each joint. Pipes shall be laid to form a smooth, uniform invert. A stopper shall be installed in the pipe mouth when pipe laying is not in progress.

14.3.3.4.2 Bulkheads for Tying-In and New Line Flushing

The contractor shall build a tight bulkhead in the pipeline where new work enters an existing sewer. The bulkhead shall remain in place until its' removal is authorized by the Engineer.

All wastewater collection lines, except building connections, shall be flushed with water in sufficient volume to obtain free flow through each line. All obstructions shall be removed and all defects corrected. As soon as possible after the pipe and manholes are completed on any line, the Contractor shall flush out the pipeline using a rubber ball ahead of the water. None of the flushing water or debris shall be permitted to enter any existing sewer.

14.3.3.4.3 Temporary Plugs

Care shall be taken to prevent earth, water and other materials from entering the pipe, and when pipe laying operations are suspended, the Contractor shall maintain a suitable stopper in the end of the pipe and also at openings for manholes at all times when pipe laying is not actually in progress. Open ends of pipe and branches shall be closed with premolded gasket joint stoppers which conform with the same requirements as pipe being used. If water is in the trench when work is resumed, the plug shall not be removed until all danger of water entering the pipe has passed.

14.3.3.4.5 Force Main Installation

In general, sewer force main must be installed in accordance with the AUD specifications for water distribution systems. Force mains shall be tested to 200 psi, or 2 times the operating pressure, whichever is greater.

Polyvinyl chloride (PVC) force main must conform to AWWA C900-L200, latest version.

Ductile iron force main must conform to AWWA C150 & C151, latest version.

High Density Polyethylene (HDPE) must conform to AWWA C906, latest version.

14.3.3.4.6 Removal and Replacement of Existing Pipe and Equipment

Where indicated on the drawings or required to properly place the work under the contract, as approved by the Engineer, the Contractor shall remove and replace such pipe lines and equipment in a manner as approved by the Engineer.

14.3.3.5 Inspection Infiltration/Exfiltration Leakage Tests

Upon completion of a section of the sewer, the Contractor shall dewater it and conduct a satisfactory test to measure infiltration or exfiltration. The testing shall be conducted prior to any connections to buildings or active sewers. The Contractor shall be responsible for the satisfactory water-tightness of the entire section of sewer. All pipe joints shall be made watertight. There shall be no visible leakage at the joints and there shall be no sand, silt, clay, or soil of any description entering the pipelines at the joints. Leaks in the pipelines which cause infiltration or exfiltration to exceed limits specified in section 14.3.2.2 shall be repaired by replacing defective pipe. Grouting and/or caulking to repair pipelines where excessive infiltration or exfiltration is evident will not be permitted.

The Contractor shall construct such weirs and bulkheads as may be required, shall furnish all water, labor, test plugs, power, pumps, meters, and other equipment necessary for the test to be properly made.

The Contractor shall use a low pressure air test whereby the line is plugged and pressurized to 4 psi, and then held at that pressure for five (5) minutes. The low pressure air test shall be performed in accordance with the applicable sections of the Uni-Bell UNI-B-6-90, latest version.

In addition to line testing, manholes shall also be tested using low-pressure vacuum methods according to Uni-Bell UNI-B-6-90.

14.3.4 Measurement and Payment

- An AUD standard bid schedule and standard payment sheet are available as part of the standard contract documentation. Please contact AUD for copies of this information.

14.4 EXCAVATION AND BACKFILLING

14.4.1 Scope

This section covers all excavation, trenching and backfilling for pipelines, complete.

14.4.2 Existing Improvements

The Contractor shall maintain in operating condition and protect from damage all existing improvements including utilities, roads, streets, sidewalks, drives, power and telephone lines, gas lines, water lines, sewers, gutters and other drains encountered, and repair to the satisfaction of the Engineer any aerial, surface or subsurface elements damaged during the course of the work. Where and if shown on the plans, the locations and existence or nonexistence of underground utilities are not guaranteed. The Contractor shall contact the ”Call Before You Dig” utilities locate service to determine and/or verify such information prior to proceeding with the work. The Contractor shall make reasonable and satisfactory provisions for the maintenance of traffic on streets, drives, walkways and at street crossings and if necessary to provide temporary walkways and bridges for crossing of the open trench as directed. Work shall not commence within Augusta, Georgia rights-of-way until a Right-of-Way Encroachment Permit is obtained from the Public Works Department.

14.4.3 Excavation

All excavation of every description and of whatever substances encountered shall be performed to the depths indicated on the drawings or as specified herein. Excavation shall be made by the open cut method except as otherwise specified or shown on the drawings. Excavation methods shall generally meet or exceed Occupational Safety and Health Administration (OSHA) construction industry standards.

All excavated materials not required for fill or backfill shall be removed and wasted as directed. The banks of shallow trenches shall be kept as nearly vertical as practicable and where required shall be properly sheeted and braced. Except where otherwise indicated, trench bottoms shall be not less than 12 inches wider nor more than 16 inches wider than the outside diameter of the pipe to be laid therein, and shall be excavated true to line, so that a clear space of not less than 6 inches nor more than 8 inches in width is provided on each side of the pipe.

Wastewater pipe shall be bedded per detail AUD-Detail-5.Excavation for structures and other accessories shall be sufficient to leave at least 12 inches in the clear between their outer surfaces and the embankment or timber which may be used to hold the bank and protect them. Where damage is liable to result from withdrawing sheeting, the sheeting will be ordered to be left in place. Except for sewer pipe bedding or at locations where excavation of rock from the bottoms of trenches is required, care shall be taken not to excavate below the depths indicated. Where rock excavation is required, the rock shall be excavated to a maximum overdepth of 4 inches below the normal required trench depth. The overdepth rock excavation and all excess trench excavation shall be backfilled with loose, moist earth, thoroughly tamped or with suitable sewer bedding material as appropriate for the type of pipe service. Rock is defined as materials which are so hard or cemented that the excavation of such material requires blasting.The excavation and removal of isolated boulders or rock fragments larger than one cubic yard in volume encountered in materials of common excavation shall be classified as rock excavation. Whenever wet or otherwise unstable soil that is incapable of properly supporting the pipe, as determined by the Engineer or indicated on the drawings, is encountered in the trench bottom, such soil shall be removed to a depth required for the lengths

designated by the Engineer, and the trench backfilled to trench bottom grade, as herein specified, with coarse sand, fine gravel, or other suitable material. Backfill with earth under structures will not be permitted and any unauthorized excess excavation below the levels indicated for the foundation of such structures shall be filled with sand, gravel, or concrete, as directed.

For water lines and sewer mains, the bottom of trenches shall be accurately graded to provide uniform bearing and support for each section of the pipe on undisturbed soil at every point along its entire length, except for portions of the pipe sections where it is necessary to excavate for bell holes and for the proper sealing of pipe joints. Bell holes shall be dug after the trench bottom has been graded. Bell holes shall be excavated only to an extent sufficient to permit accurate work in the making of the joints and to insure that the pipe, for a maximum of its length will rest upon the prepared bottom of the trench. Depressions for joints other than mechanical shall be made in accordance with the recommendations of the joint manufacturers for the particular joint used.

14.4.3.1 Grading and Stacking

All grading in the vicinity of trench excavation shall be controlled to prevent surface ground water from flowing into the trenches. Any water accumulated in the trenches shall be removed by pumping or by other approved methods. During excavation, material suitable for backfilling shall be stored in an orderly manner a minimum distance of one and one-half times the depth of the excavation back from the edges of trenches to avoid overloading and prevent slides or cave-ins. Material unsuitable for backfilling, as determined by the Engineer, shall be removed from the job site and disposed of by the Contractor in a manner as approved by the Engineer.

14.4.3.2 Shoring and Sheeting

All shoring, sheeting, and bracing required to perform and protect the excavation and to safeguard employees and the public shall be performed. The failure of the Engineer to direct the placing of such protection shall not relieve the Contractor of his responsibility for damage resulting from its omission.

Whenever sheeting is driven to a depth below the elevation of the top of the pipe, that portion of the sheeting below the elevation of the top of the pipe shall not be disturbed or removed. Sheeting left in place shall be cut off not less than 1 foot below finished grade. No sheeting shall be removed until the excavation is substantially backfilled as hereinafter specified.

14.4.3.3 Water Removal

Where water is encountered, it shall be prevented from accumulating in excavated areas by pumping, well-pointing and pumping, or by other means approved by the Engineer as to capacity and effectiveness. Water removed from excavations shall be discharged at points where it will not cause injury to public or private property, or the work completed or in progress. All efforts to prevent sedimentation shall be made. Under no circumstances shall trench bottoms be prepared, pipes laid, or appurtenances installed in water. Water shall not be allowed to rise in unbackfilled excavations after pipe or structures have been placed.

14.4.3.4 Blasting

Explosives are to used only within legal limitations. Before explosives are used, all necessary permits for this work shall be secured and all precautions taken in the blasting operations to prevent damage to private or public property or to persons. The Contractor shall assume full liability for any damage that may occur during the use of explosives. No blast shall be set off within 50 feet of pipe already laid in the trench. Blasting may only be done by an approved, licensed blaster. The excavation shall proceed in a conventional manner with satisfactory effort made to remove hard materials before the Engineer makes a determination of need for blasting. Pre-drilling and blasting will be allowed, if the Contractor can provide evidence for the Engineer's review that boring logs show the material cannot be excavated otherwise. Evidence will be provided for the Engineer's review and approval before pre-drilling and blasting is undertaken.

14.4.3.5 Tree Protection

Care shall be exercised to protect the roots of trees to be left standing. Within the branch spread of the tree, trench shall be opened only when the work can be installed immediately. Injured roots shall be pruned cleanly and backfill placed as soon as possible.

14.4.4 Backfilling

Trenches and other excavations shall not be backfilled until all required tests are performed and the work has been approved by the Engineer. The trenches shall be carefully backfilled with the excavated materials approved for backfilling consisting of earth, loam, sandy clay, sand, or other approved materials. No material shall be used for backfilling that contains mulch, other unstable materials, stones, blasted rock, broken concrete or pavement, or other hard materials having any dimension greater than 4 inches; or large clods of earth, debris, frozen earth or earth with an exceptionally high void content. Backfilling within Augusta right-of-way shall conform to Georgia Department of Transportation and Augusta, Georgia specifications.

For backfill up to a level 2 feet over the top of pressure pipelines and 2 feet above the top of gravity pipelines, only selected materials shall be used. Select materials shall be finely divided material free from debris, organic material and stone, and may be suitable job excavated material or shall be provided by the Contractor from other sources. The backfill shall be placed in uniform layers not exceeding 6 inches in depth. Each layer shall be moistened and carefully and uniformly tamped with mechanical tampers or other suitable tools. Each layer shall be placed and tamped under the pipe haunches with care and thoroughness so as to eliminate the possibility of voids or lateral displacement.

The remainder of the backfill material shall then be placed and compacted above the level specified above. In areas not subject to traffic, the backfill shall be placed in 12 inch layers and each layer moistened and compacted to a density approximating that of the surrounding earth. Under roadways, driveways, paved areas, parking lots, along roadway shoulders and other areas subject to traffic, the backfill shall be placed in 6 inch layers and each layer moistened and compacted to density at least equal to that of the surrounding earth so that traffic can be resumed immediately after backfilling is completed (AUD-Detail 18). Any trenches which are improperly backfilled, or where settlement occurs, shall be reopened to the depth required for proper compaction, then refilled and compacted with the surface restored to the required grade compaction. Along all portions of the trenches not located in roadways, the ground shall be graded to a reasonable uniformity and the mounding over the trenches left in a neat condition satisfactory to the Engineer.

Sheeting not specified to be left in place shall be removed as the backfilling progresses. Sheeting shall be removed in such a manner as to avoid caving of the trench. Voids left by the removal of sheeting and shoring shall be carefully filled and compacted. Where, in the opinion of the Engineer, damage is liable to result from withdrawing sheeting, the sheeting will be ordered to be left in place.

14.4.5 Boring and Jacking

Where required by the drawings, the pipeline will be installed in a steel casing, placed by boring and jacking. The size and thickness of the casing shall be determined by the design engineer. Where boring is required under highways, the materials and workmanship will be in accordance with the standards of the Georgia Department of Transportation or local authority. Boring and jacking under railroads will be governed by the latest A.R.E.A. standards and those of the railroad involved. The steel casing shall be in accordance with ASTM A252 to the thicknesses shown on the drawings. See sections 14.2.2.2.4 and 14.3.2.4.3.6 of these specifications for boring and jacking requirements.

14.4.6 Pavement Removal and Replacement

Where necessary existing pavements shall be removed and replaced, the applicable specifications of the Georgia Department of Transportation or local authority shall govern this work. Joints shall be sawed, unless joints equally uniform in the opinion of the Engineer result from other means. Refer to Right-of-Way Encroachment Guidelines for pavement removal and replacement with Augusta right-of-way.

14.4.7 Measurement and Payment

Excavation and backfilling for pipelines and appurtenances, except as hereinafter provided for, will be considered as incidental to the construction of the various elements of the installation it is associated with, and no separate payment will be made therefor.

When made at the direction of Engineer, overcut, rock excavation and backfill to compensate for rock will be made at the unit contract price for rock excavation per cubic yard measured in place.

When made at the direction of the Engineer, overcut and backfill to compensate for inadequate foundation will be paid for at the unit contract price for overcut and clean stone bedding, per ton of stone.

Sheeting ordered to be left in place will be paid for at the unit contract price for sheeting left in place, per board foot.

Joints in pavements will not be paid for separately. Pavement removal and replacement will be paid for at the unit contract price therefor, per square yard.

14.5 REFERENCES

In this reference section, ANSI refers to the American National Standards Institute, 25 West 43rd Street, 4th floor New York, NY 10036. AWWA refers to the American Water Works Association, 6666 West Quincy Avenue, Denver, Colorado, 80235. APWA refers to the American Public Works Society, 2345 Grand Boulevard, Suite 500, Kansas City, MO 64108-2641. All standards are listed as the latest known version. **Any future revision to these standards will supercede the listed standard.**

ANSI/AWWA, C104/A21.4-95. 1995. American National Standard for Cement-Mortar Lining for Ductile-Iron Pipe and Fittings for Water.

ANSI/AWWA, C110/A21.10-98. 1998. American National Standard for Ductile-Iron and Gray-Iron Fittings, 3 in. through 48 in. (75 mm through 1200 mm), for Water.

ANSI/AWWA, C111/A21.11-00. 2000. American National Standard for Rubber-Gasket Joints for Ductile-Iron Pressure Pipe and Fittings.

ANSI/AWWA, C115/A21.15-99. 1999. American National Standard for Flanged Ductile-Iron Pipe With Threaded Flanges.

ANSI/AWWA, C150/A21.50-02. 2002 American National Standard for Thickness Design of Ductile-Iron Pipe.

ANSI/AWWA, C151/A21.51-02. 2002. American National Standard for Ductile-Iron Pipe, Centrifugally Cast, for Water.

ANSI/AWWA, C500-02. 2002. Metal-Seated Gate Valves for Water Supply Service.

ANSI/AWWA, C502-94. 1994. Dry-Barrel Fire Hydrants.

ANSI/AWWA, C503-97. 1997. Wet-Barrel Fire Hydrants.

ANSI/AWWA, C504-00. 2000. Rubber-Sealed Butterfly Valves.

ANSI/AWWA, C507-99. 1999. Ball Valves 6 in. through 48 in. (150 mm through 1200 mm).

ANSI/AWWA, C508-01. 2001. Swing-Check Valves for Waterworks Service, 2 in. (50mm) Through 24 in. (600mm) NPS.

ANSI/AWWA, C509-01. 2001. Resilient-Seated Gate Valves for Water-Supply Service.

ANSI/AWWA, C510-97. 1997. Double Check Valve Backflow-Prevention Assembly.

ANSI/AWWA, C511-97. 1997. Reduced-Pressure Principle Backflow-Prevention Assembly.

ANSI/AWWA, C512-99. 1999. Air Release, Air/Vacuum and Combination Air Valves for Water Works Service.

ANSI/AWWA, C550-01. 2001. Protective Epoxy Interior Coating for Valves and Hydrants.

ANSI/AWWA, C600-99. 1999. Installation of Ductile-Iron Water Mains and Their Appurtenances.

ANSI/AWWA, C605-94. 1994. Underground Installation of Polyvinyl Chloride (PVC) Pressure Pipe and Fittings for Water.

APWA, 2000. Permanent Buried Line Marking. http://www.apwa.net/Documents/GovtAffairs/Policies/ROW/permburied.pdf

Department of Community Affairs, Office of Coordinated Planning. 2000. Georgia State Amendments to the Standard Plumbing Code (2000 edition).

Great Lakes – Upper Mississippi River Board of State and Provincial Public Health and Environmental Managers. 1997. Recommended Standards for Wastewater Facilities.

ASTM D2321, 2005. –Standard Practice for Underground Installation of Thermoplastic Pipe for Sewers and Other gravity-flow Applications

14.6 APPENDICES

14.6.1 Standard Details

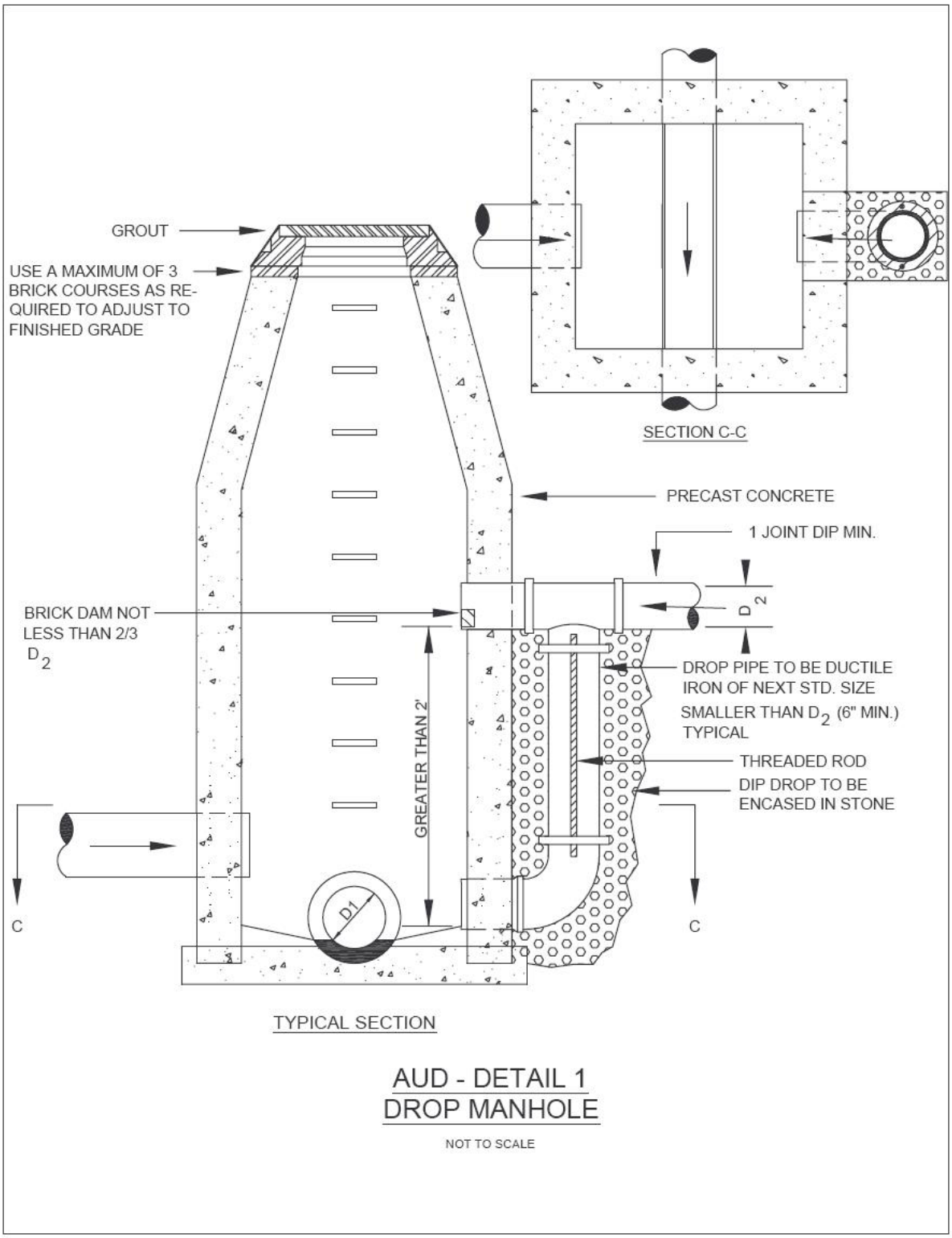

AUD - DETAIL 1
DROP MANHOLE

NOT TO SCALE

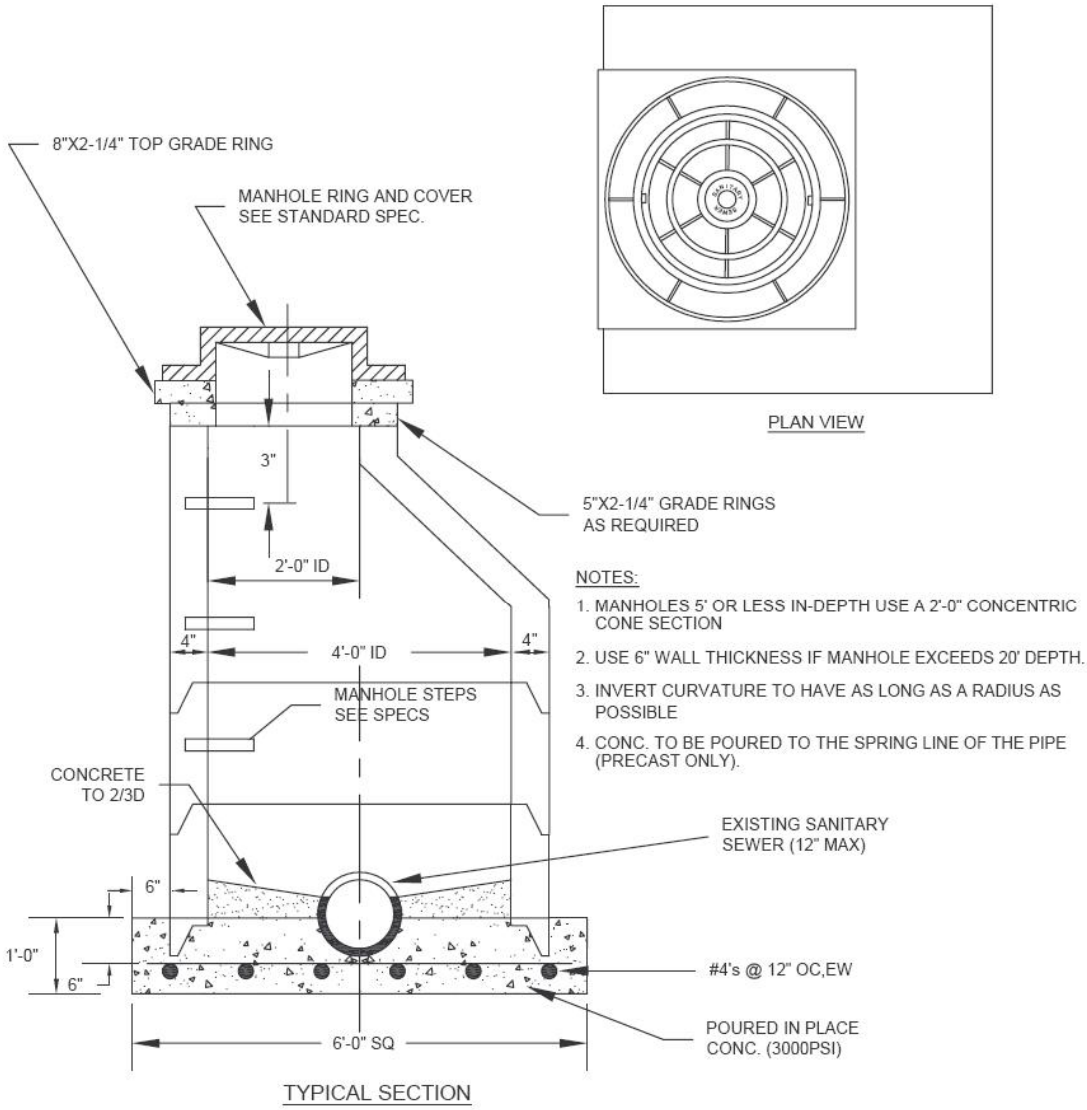

NOTES:

1. MANHOLES 5' OR LESS IN-DEPTH USE A 2'-0" CONCENTRIC CONE SECTION
2. USE 6" WALL THICKNESS IF MANHOLE EXCEEDS 20' DEPTH.
3. INVERT CURVATURE TO HAVE AS LONG AS A RADIUS AS POSSIBLE
4. CONC. TO BE POURED TO THE SPRING LINE OF THE PIPE (PRECAST ONLY).

AUD - DETAIL 2
PRECAST MANHOLE

NOT TO SCALE

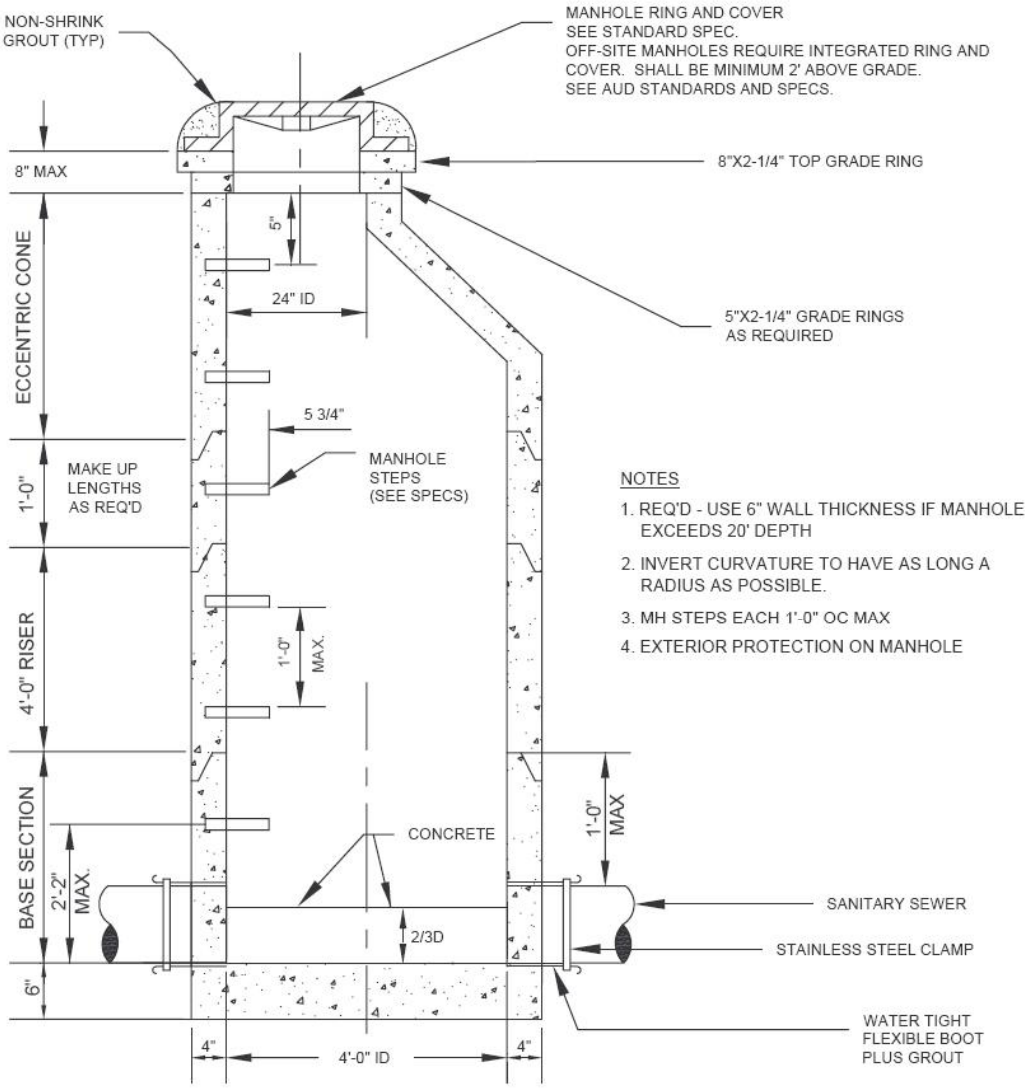

NOTES

1. REQ'D - USE 6" WALL THICKNESS IF MANHOLE EXCEEDS 20' DEPTH
2. INVERT CURVATURE TO HAVE AS LONG A RADIUS AS POSSIBLE.
3. MH STEPS EACH 1'-0" OC MAX
4. EXTERIOR PROTECTION ON MANHOLE

TYPICAL SECTION

AUD - DETAIL 3
PRECAST MANHOLE

NOT TO SCALE

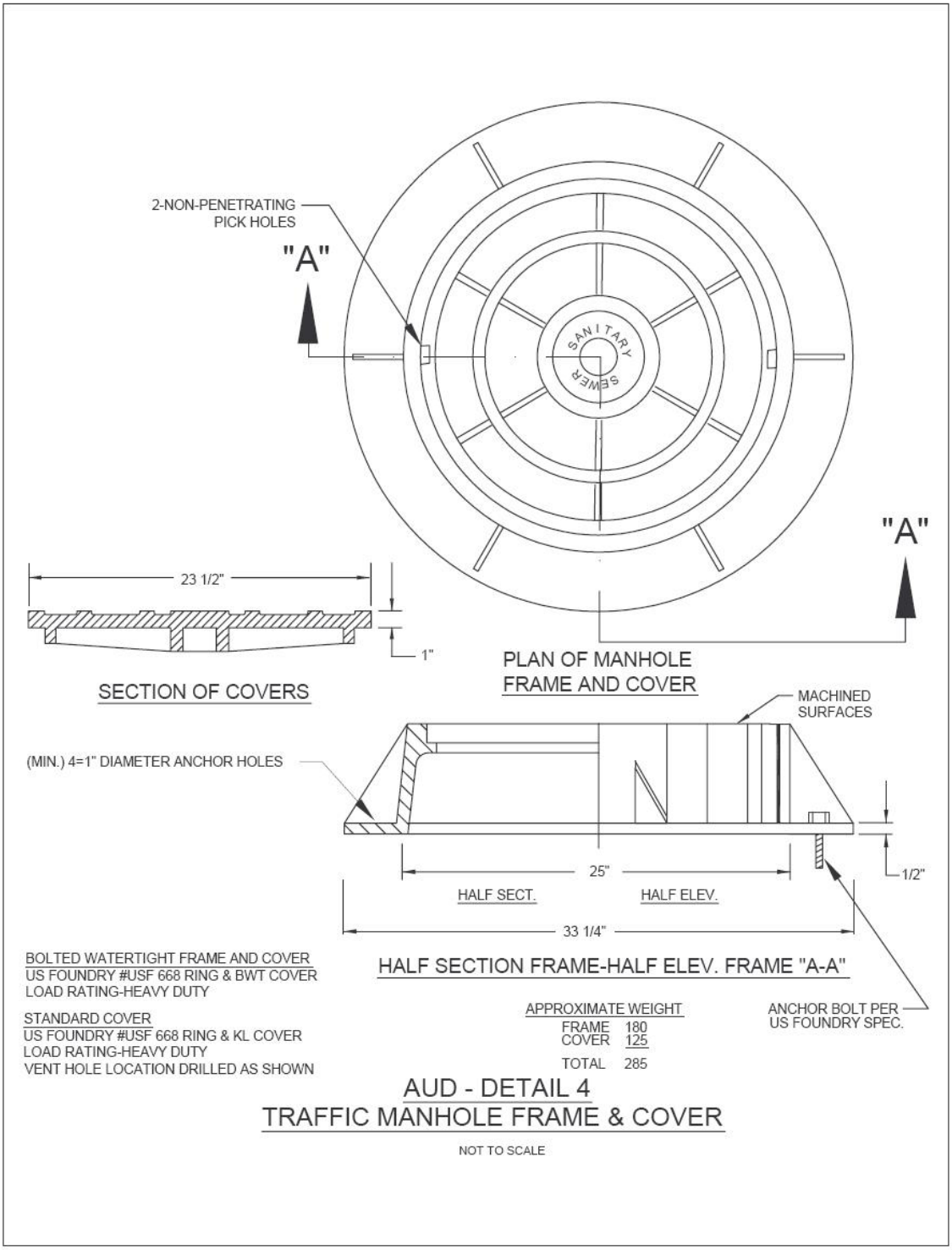
2-NON-PENETRATING PICK HOLES
"A"
SANITARY SEWER
"A"
23 1/2"
1"
SECTION OF COVERS
PLAN OF MANHOLE FRAME AND COVER
MACHINED SURFACES
(MIN.) 4=1" DIAMETER ANCHOR HOLES
25"
1/2"
HALF SECT.
HALF ELEV.
33 1/4"
HALF SECTION FRAME-HALF ELEV. FRAME "A-A"
BOLTED WATERTIGHT FRAME AND COVER
US FOUNDRY #USF 668 RING & BWT COVER
LOAD RATING-HEAVY DUTY
STANDARD COVER
US FOUNDRY #USF 668 RING & KL COVER
LOAD RATING-HEAVY DUTY
VENT HOLE LOCATION DRILLED AS SHOWN
APPROXIMATE WEIGHT
FRAME 180
COVER 125
TOTAL 285
ANCHOR BOLT PER US FOUNDRY SPEC.
AUD - DETAIL 4
TRAFFIC MANHOLE FRAME & COVER
NOT TO SCALE

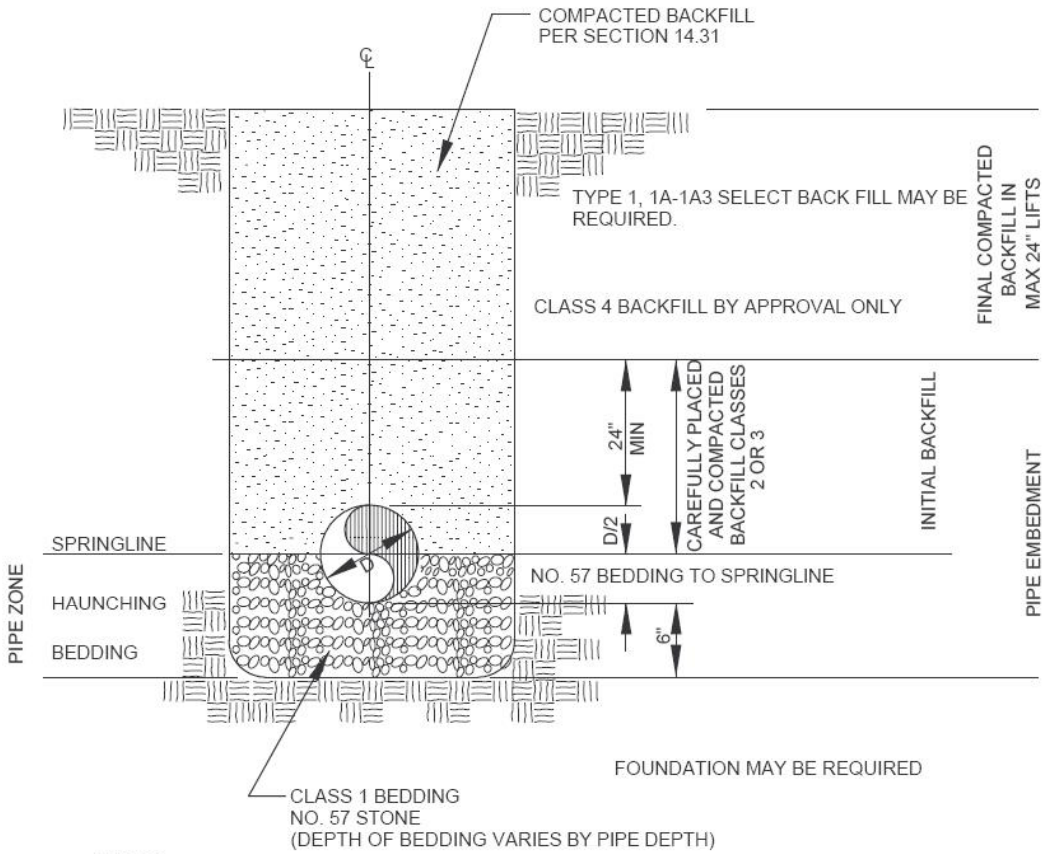

NOTES:

1. TRENCH EXCAVATION, BACKFILL AND COMPACTION SHALL BE IN STRICT CONFORMANCE WITH SECTION 14.31 OF AUGUSTA UTILITIES DEPARTMENT SPECIFICATIONS.

AUD - DETAIL 5
TYPICAL TRENCH EXCAVATION/ BACKFILL DETAIL FOR SANITARY SEWER

NOT TO SCALE

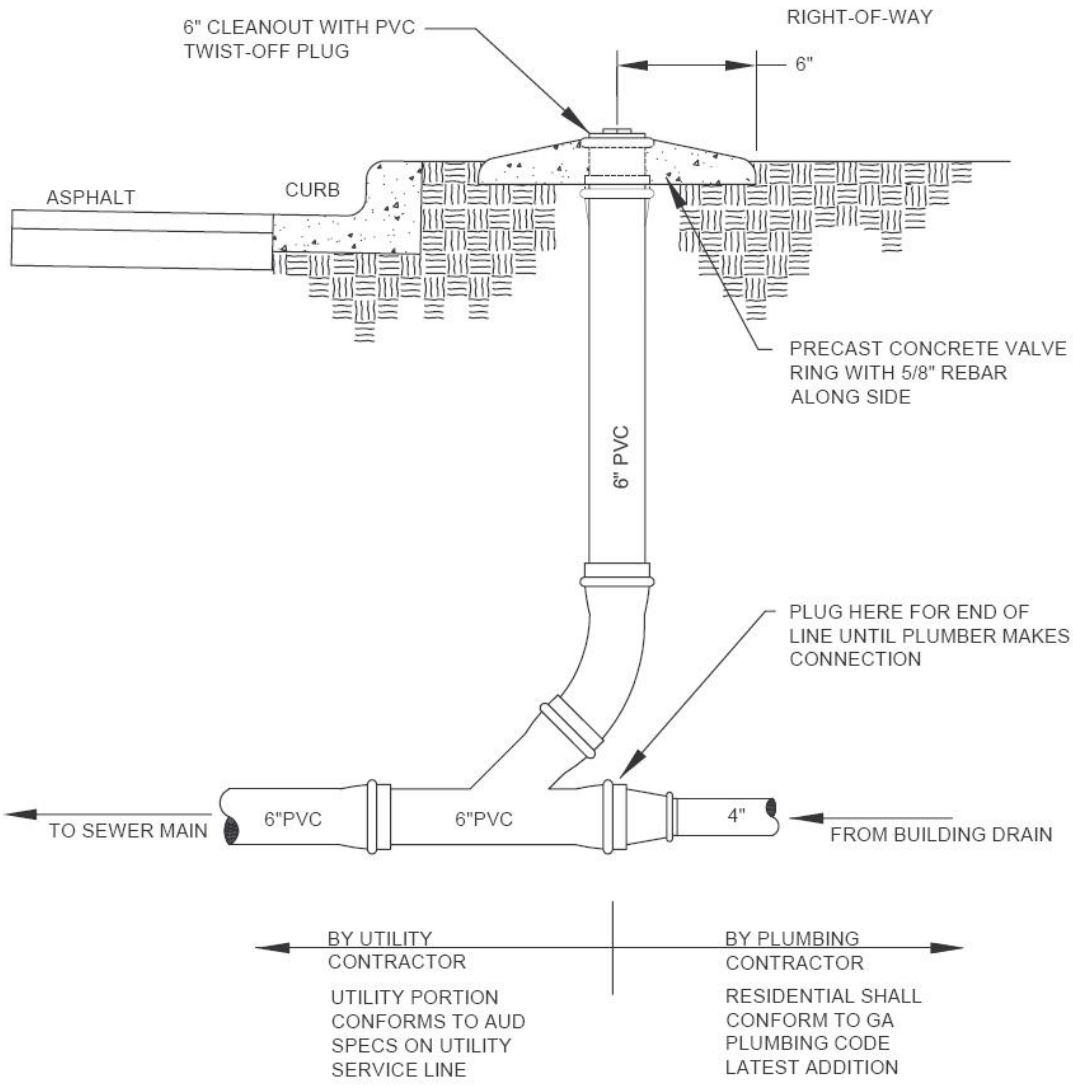

AUD - 6
SEWER CLEANOUT

NOT TO SCALE

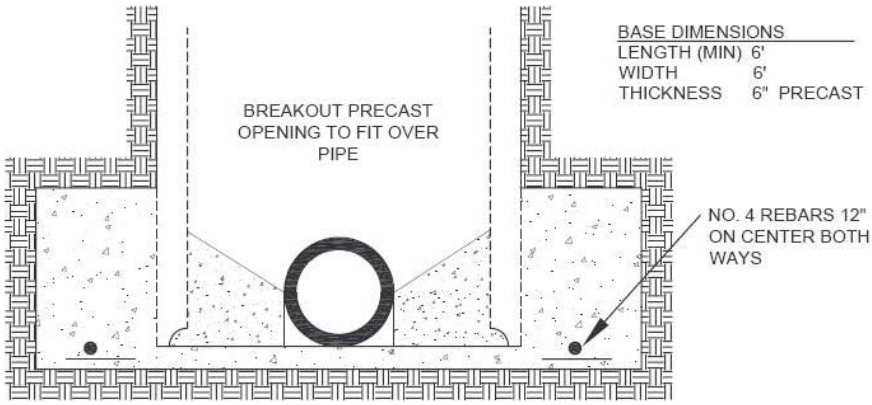

FRONT VIEW

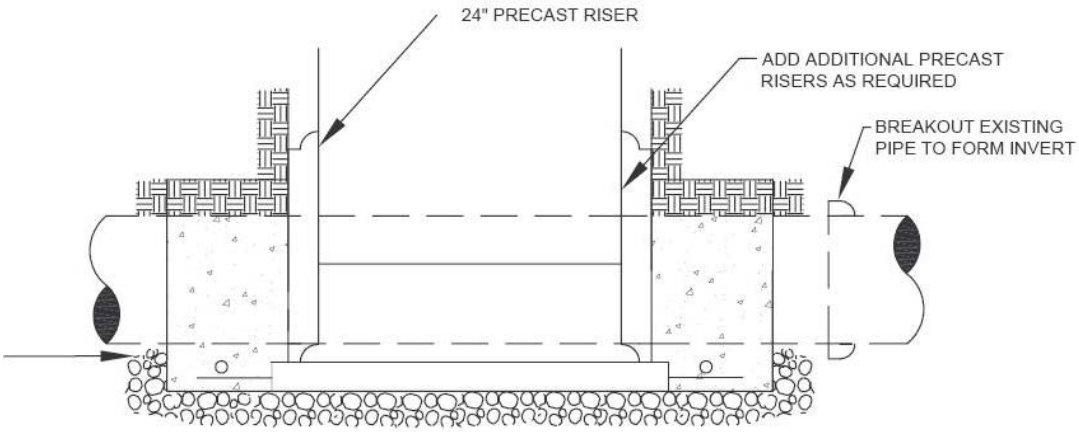

SIDE SECTION

NOTES

1. CONCRETE TO BE POURED AROUND PIPE PENETRATION FOR SEAL ON OUTSIDE

2. CONSTRUCTION SHALL BE IN ACCORDANCE WITH AUGUSTA UTILITY DEPARTMENT STANDARDS, LATEST REVISION.

AUD - DETAIL 7
CONNECTOR MANHOLE

NOT TO SCALE

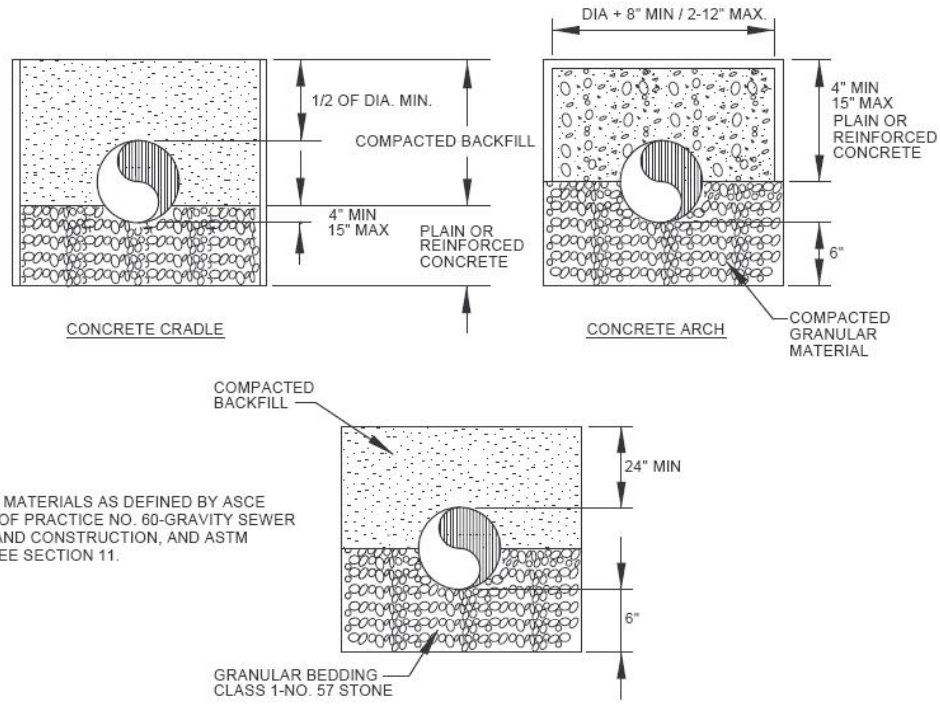

BEDDING MATERIALS AS DEFINED BY ASCE MANUAL OF PRACTICE NO. 60-GRAVITY SEWER DESIGN AND CONSTRUCTION, AND ASTM D 3839. SEE SECTION 11.

BEDDING CLASSES FOR FLEXIBLE PIPE

GENERAL BEDDING AND BACKFILLING CONCEPTS DEVELOPED FOR FLEXIBLE SEWER PIPE MAY ALSO BE APPLIED TO RIGID PIPE. REFER TO ANSI AND ASTM SPECIFICATIONS. NO. 57 STONE IS REQUIRED FOR BEDDING WITH PVC PIPE IN AUGUSTA.

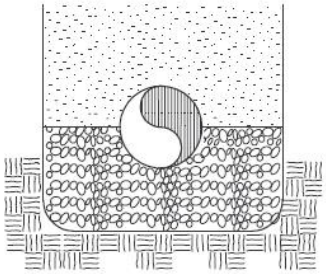

CLASS 2	TRENCH BACKFILLED WITH COURSE SAND & GRAVELS WITH MAX PARTICLE SIZE OF 1 1/2", INCL VARIOUSLY GRADED SANDS & GRAVELS CONTINUING SMALL PERCENTAGES OF FINES, SOIL TYPES GW, GP, SW & SP ARE INCLUDED.
CLASS 3	TRENCH BACKFILLED WITH FINE SAND AND CLAYEY GRAVELS, INCL FINE SANDS, SAND-CLAY MIXTURES, AND GRAVEL-CLAY MIXTURES. SOIL TYPES GM, GC, SM, AND SC ARE INCLUDED.
CLASS 4	THIS TYPE MATERIAL IS TO BE USED WITH APPROVAL ONLY BY THE AUD REPRESENTATIVE.

AUD - DETAIL 8
BACKFILL CLASSES FOR PIPING INSTALLATION

NOT TO SCALE

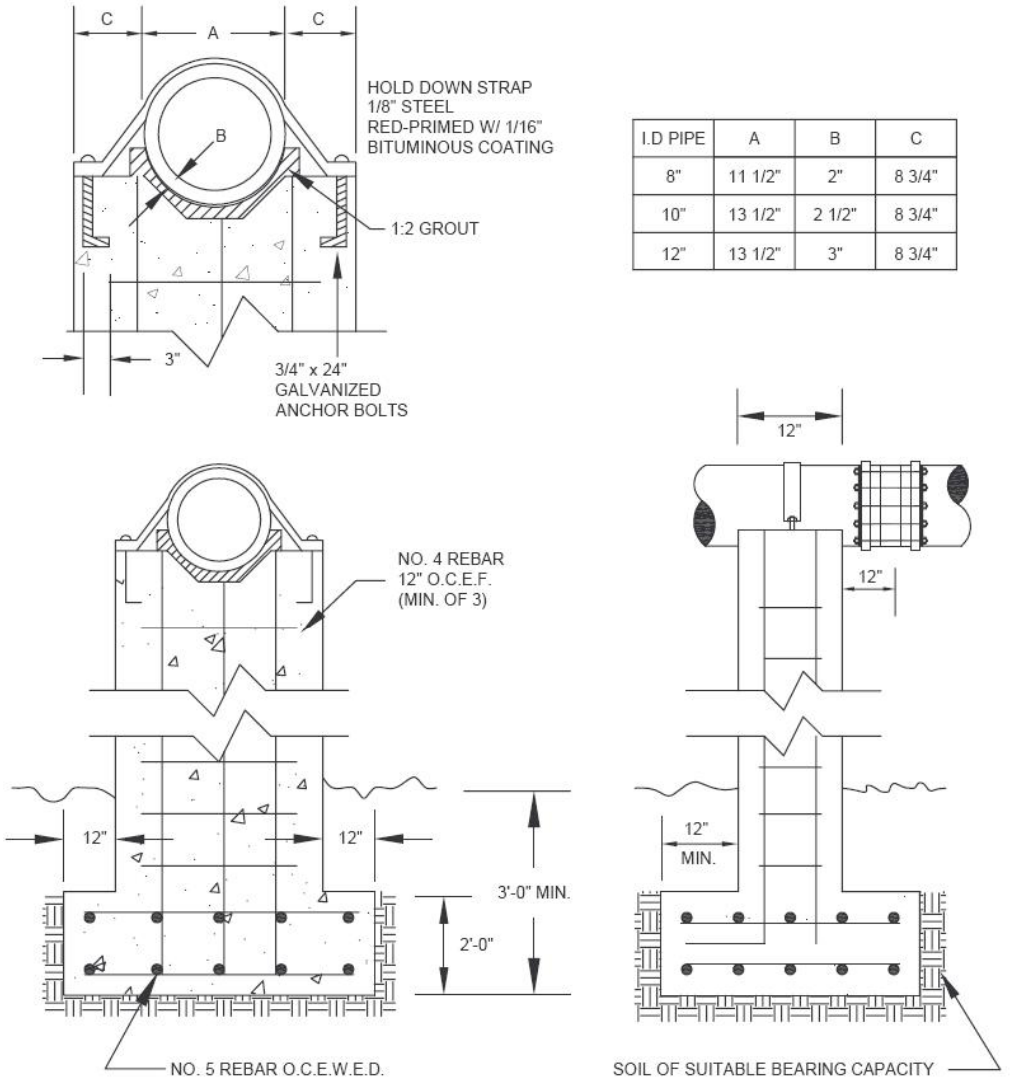

I.D PIPE	A	B	C
8"	11 1/2"	2"	8 3/4"
10"	13 1/2"	2 1/2"	8 3/4"
12"	13 1/2"	3"	8 3/4"

NOTE: CARRIER PIPE MAY BE CASED PER DESIGN ENGINEERING SPECS.

AUD - DETAIL 9
CONCRETE PIER FOR AERIAL CROSSING

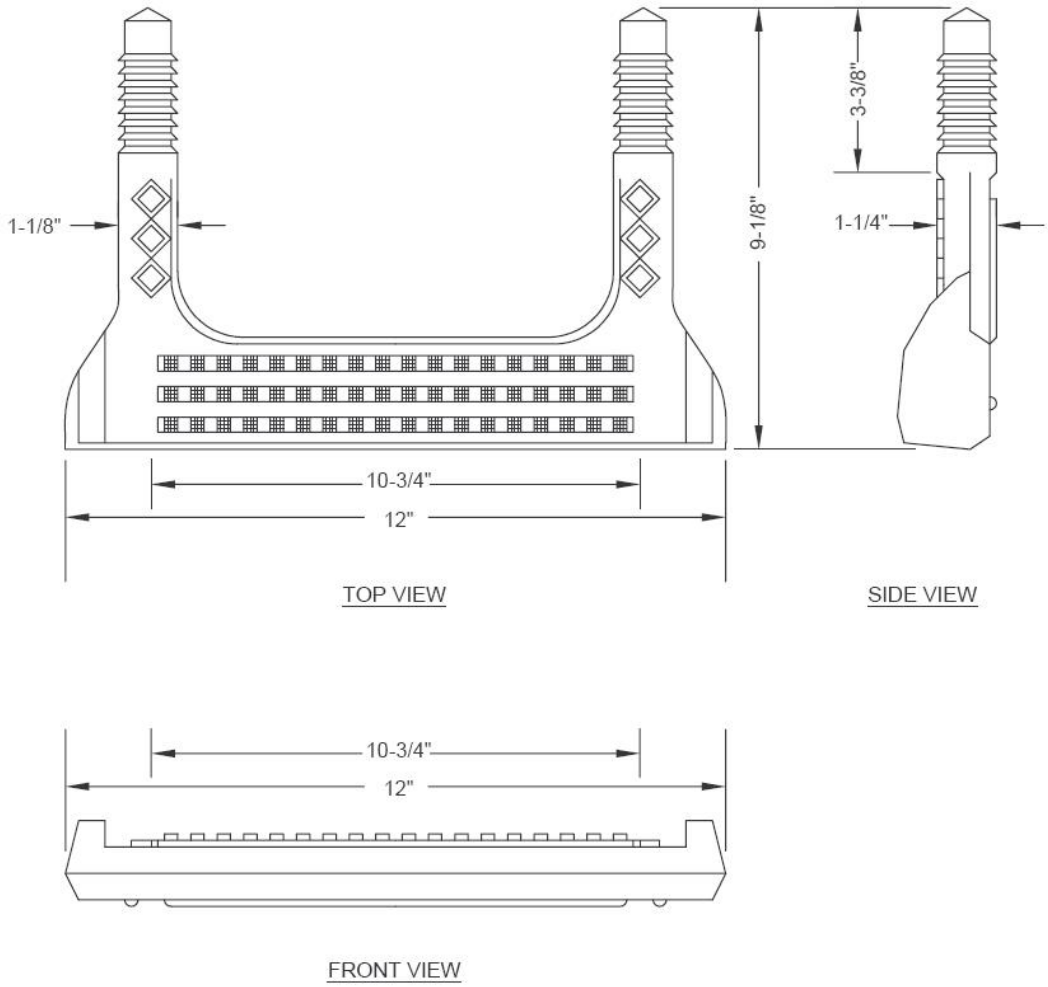

STEP SHALL BE MANUFACTURED BY OLIVER TIRE AND RUBBER COMPANY OR APPROVED EQUAL.

AUD - DETAIL 10
MANHOLE STEP

NOT TO SCALE

AUD - DETAIL 11

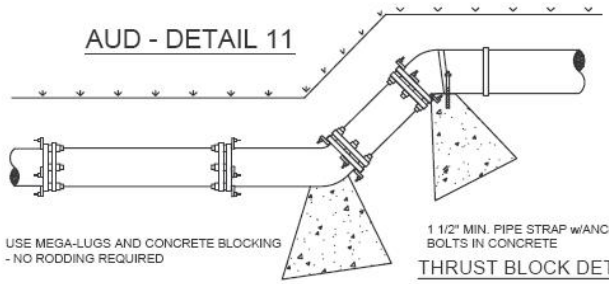

THRUST BLOCK DETAIL

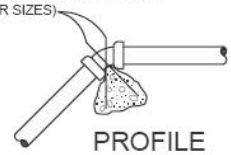

PROFILE

NOT TO SCALE

CLAMPS AND TIE RODS

NOT TO SCALE

FITTING SIZE	ROD SIZE	EMBEDMENT
12" & LESS	#6	30"
14"-16"	#8	36"

VERTICAL BENDS			
FITTING SIZE	BEND ANGLE		
	45°	22 1/2°	11 1/4°
≤4	1.1	0.4	0.2
6	2.7	1.0	0.4
8	4.0	1.5	0.6
10	6.0	2.3	0.9
12	8.5	3.2	1.3
14	11.5	4.3	1.8
16	14.8	5.6	2.3

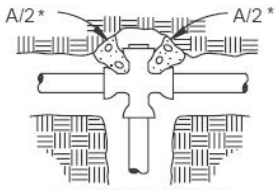

PLUGGED CROSS

* EACH AREA (A/2) IS 1/2 OF TABULATED TOTAL AREA

VOLUME OF THRUST BLOCK IN CUBIC YARDS

BEARING AREA OF THRUST BLOCKS IN SQ. FT. (HORIZONTAL BENDS)							
FITTING SIZE	TEE, WYE, PLUG, OR CAP	90° BEND PLUGGED CROSS	TEE PLUGGED RUN		BEND ANGLE		
			A_1	A_2	45°	22 1/2°	11 1/4°
≤4	1.0	1.4	1.9	1.4	1.0	–	–
6	2.1	3.0	4.3	3.0	1.6	1.0	–
8	3.8	5.3	7.6	5.4	2.9	1.5	1.0
10	5.9	8.4	11.8	8.4	4.6	2.4	1.2
12	8.5	12.0	17.0	12.0	6.6	3.4	1.7
14	11.5	16.3	23.0	16.3	8.9	4.6	2.3
16	15.0	21.3	30.0	21.3	11.6	6.0	3.0

THRUST BLOCK NOTES

1. PIPE < 16" DIA CAN BE RESTRAINED USING THRUST BLOCKS OR RESTRAINED JOINTS AT THE CONTRACTORS OPTION. CONTRACTOR SHALL SUBMIT A BURIED PIPING RESTRAINT PLAN TO THE ENGINEER.
2. KEEP CONCRETE CLEAR OF JOINT AND JOINT ACCESSORIES.
3. CONCRETE THRUST BLOCKING SHALL BE POURED AGAINST UNDISTURBED EARTH.
4. REQUIRED VOLUMES OR BEARING AREAS AT FITTINGS SHALL BE AS INDICATED BELOW, AND ADJUSTED, IF NECESSARY, TO CONFORM TO THE TEST PRESSURE(S) AND ALLOWABLE SOIL BEARING STRESS(ES) STATED IN THE SPECIFICATIONS.
5. THRUST BLOCK VOLUMES FOR VERTICAL BENDS HAVING UPWARD RESULTANT THRUSTS ARE BASED ON TEST PRESSURE OF 150 PSIG AND THE WEIGHT OF CONCRETE = 4050 LBS/CU YD. TO COMPUTE VOLUMES FOR DIFFERENT TEST PRESSURES, USE THE FOLLOWING EQUATION: VOLUME = (TEST PRESS./150) x (TABLE VALUE).
6. BEARING AREAS FOR HORIZONTAL BEND THRUST BLOCKS ARE BASED ON TEST PRESSURE OF 150 PSIG AND AN ALLOWABLE SOIL BEARING STRESS OF 2000 LBS/SQ FT. TO COMPUTE BEARING AREAS FOR DIFFERENT TEST PRESSURES AND SOIL BEARING STRESSES, MULTIPLY TABLE VALUES BY THE FACTOR $(13.33)(P'/S_b)$, WHERE: P' = ACTUAL TEST PRESSURE, PSIG
   S_b = ACTUAL SOIL BEARING PRESSURE, PSF.
7. THRUST BLOCKS FOR VERTICAL BENDS HAVING DOWNWARD RESULTANT THRUSTS SHALL BE THE SAME AS FOR HORIZONTAL BENDS.
8. BEARING AREAS, VOLUMES, AND SPECIAL BLOCKING DETAILS SHOWN ON PLANS TAKE PRECEDENCE OVER THIS STANDARD
9. BEARING AREA OF THRUST BLOCK SHALL NOT BE LESS THAN 1.0 SQ FT.
10. VERTICAL BENDS THAT REQUIRE A THRUST BLOCK VOLUME EXCEEDING 5 CUBIC YARDS REQUIRE SPECIAL BLOCKING DETAILS. SEE PLANS FOR VOLUMES SHOWN TO LEFT OF SOLID LINE IN TABLE.
11. TEST PRESSURES ARE SHOWN IN THE PIPING SCHEDULE.
12. ACTUAL ALLOWABLE SOIL BEARING PRESSURE IS 1500 LBS/SQ FT.

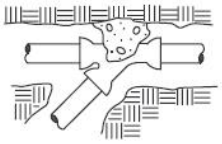

WYE

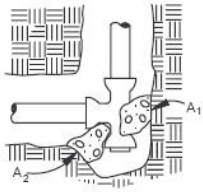

PLUGGED TEE

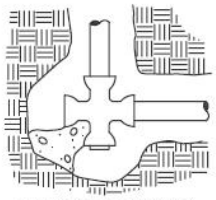

PLUGGED CROSS

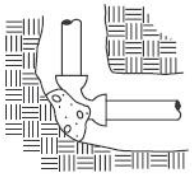

BEND

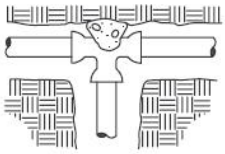

TEE

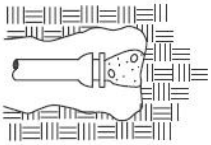

1/4" PLYWOOD OVER FACE OF BOLTS

NOTES

1. DO NOT ALLOW CONCRETE TO COVER BOLTS, GLANDS, RINGS OR NUTS.
2. ALL PLUGS, CAPS, TEES, WYES AND AT BENDS MORE THAN 11 1/4" SHALL BE GIVEN REACTION BLOCKING AS SHOWN
3. SUFFICIENT THRUST BLOCK BEARING AREA SHALL BE INSTALLED TO DISTRIBUTE THE THRUST BLOCK BEARING INTO THE UNDISTURBED TRENCH WALL WHERE IT IS DETERMINED THAT THE TRENCH WALL WILL NOT PROVIDE SUITABLE SUPPORT, 3/4" ALL-THREADED RODS WITH APPURTENANCES SHALL BE USED IN LIEU OF BLOCKING
4. MEGA-LUGS MAY BE INSTALLED w/o RODDING AS AN APPROVED EQUAL.

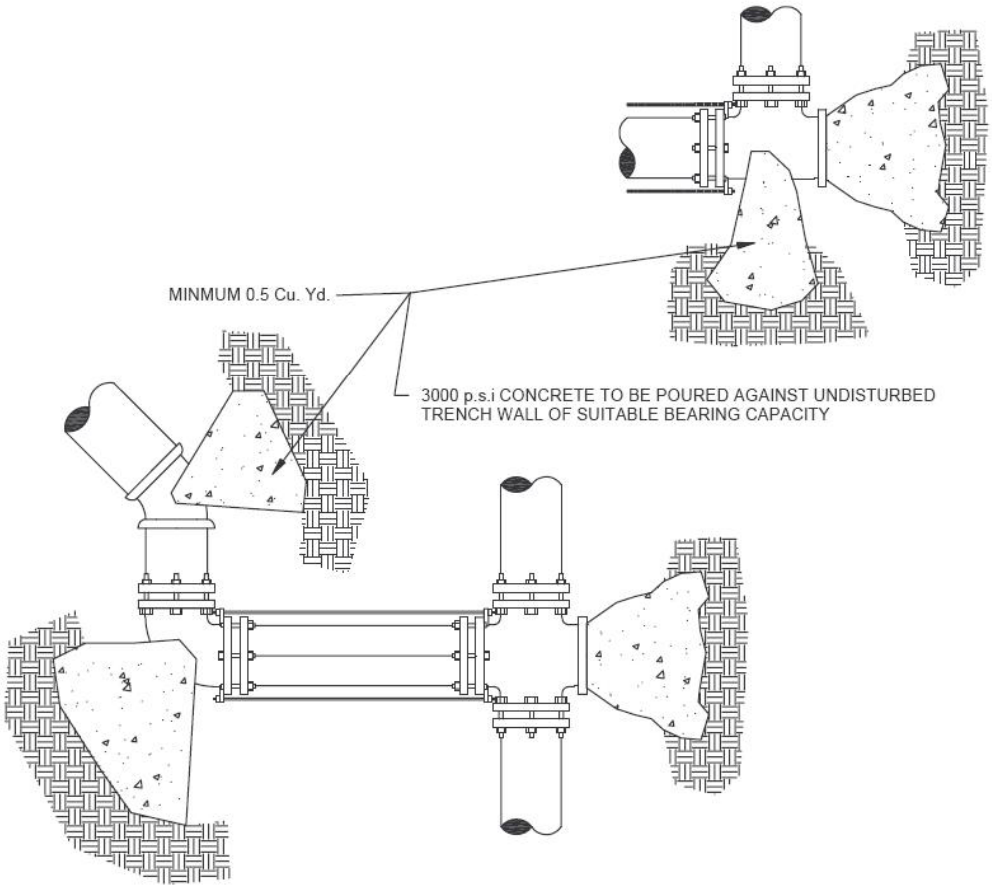

AUD - DETAIL 12
REACTION BLOCKING

NOT TO SCALE

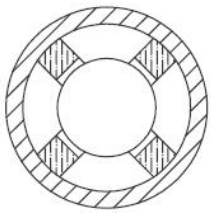

CENTERED/RESTRAINED POSITIONING FOR WATER MAINS
MECHANICAL JOINT PIPE REQUIRED FOR WATER MAINS.

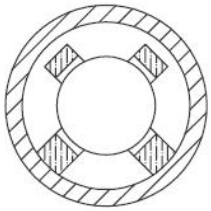

STANDARD POSITIONING
FOR SANITARY SEWER

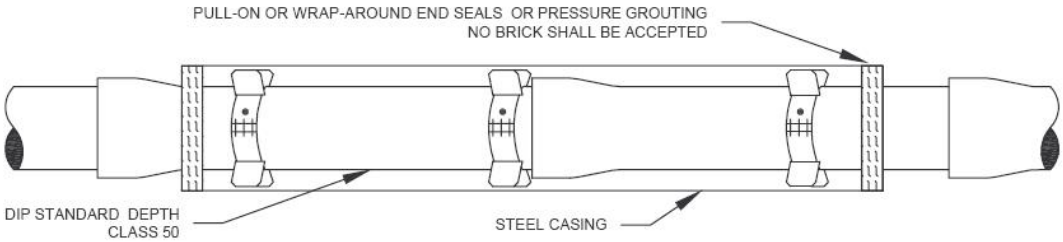

NOTES

1. SPACER OPTIONS: 8" OR 12" WIDE BAND
2. APPROVED TYPES ARE CASCADE OR PSI
3. INSTALLATION SHALL BE IAW THE MANUFACTURES STANDARDS
4. CASING PIPE THICKNESS SHALL BE PER DOT OR RAILWAY SPECIFICATIONS

AUD - DETAIL 13
TYPICAL ROADWAY JACK AND BORE
FOR WATER AND SANITARY SEWER MAINS

TAPPING VALVE SHALL BE A MUELLER T-2360 RESILIENT WEDGE-FL X MJ ENDS OR APPROVED EQUAL. TAPPING SLEEVE SHALL BE A MUELLER H-615 MJ OR APPROVED EQUAL. NO SS REPAIR CLAMPS OR MJ SPLIT SLEEVES WILL BE ACCEPTED.

TOP VIEW

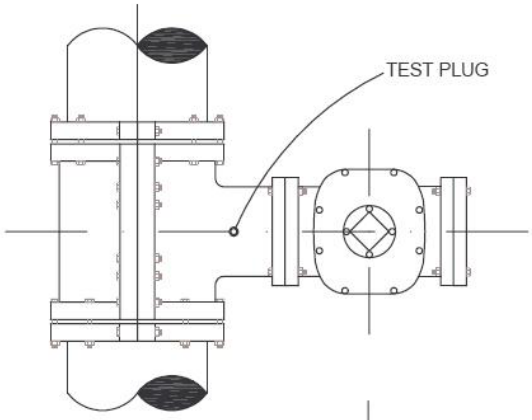

TAPPING SLEEVE AND VALVE SHALL BE PRESSURE TESTED FOR 1 HOUR PRIOR TO TAPPING THE EXISTING MAIN. AN AUD INSPECTOR SHALL BE PRESENT DURING TESTING. ALL TESTING SHALL BE IN ACCORDANCE WITH AUD SPECIFICATIONS. TESTING PRESSURE SHALL BE 200 p.s.i.

SIDE VIEW

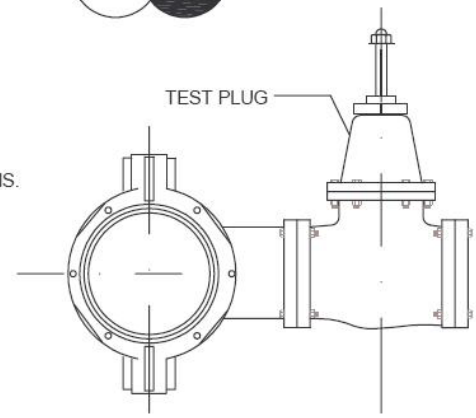

AUD -DETAIL 14
TAPPING VALVE AND SLEEVE

NOT TO SCALE

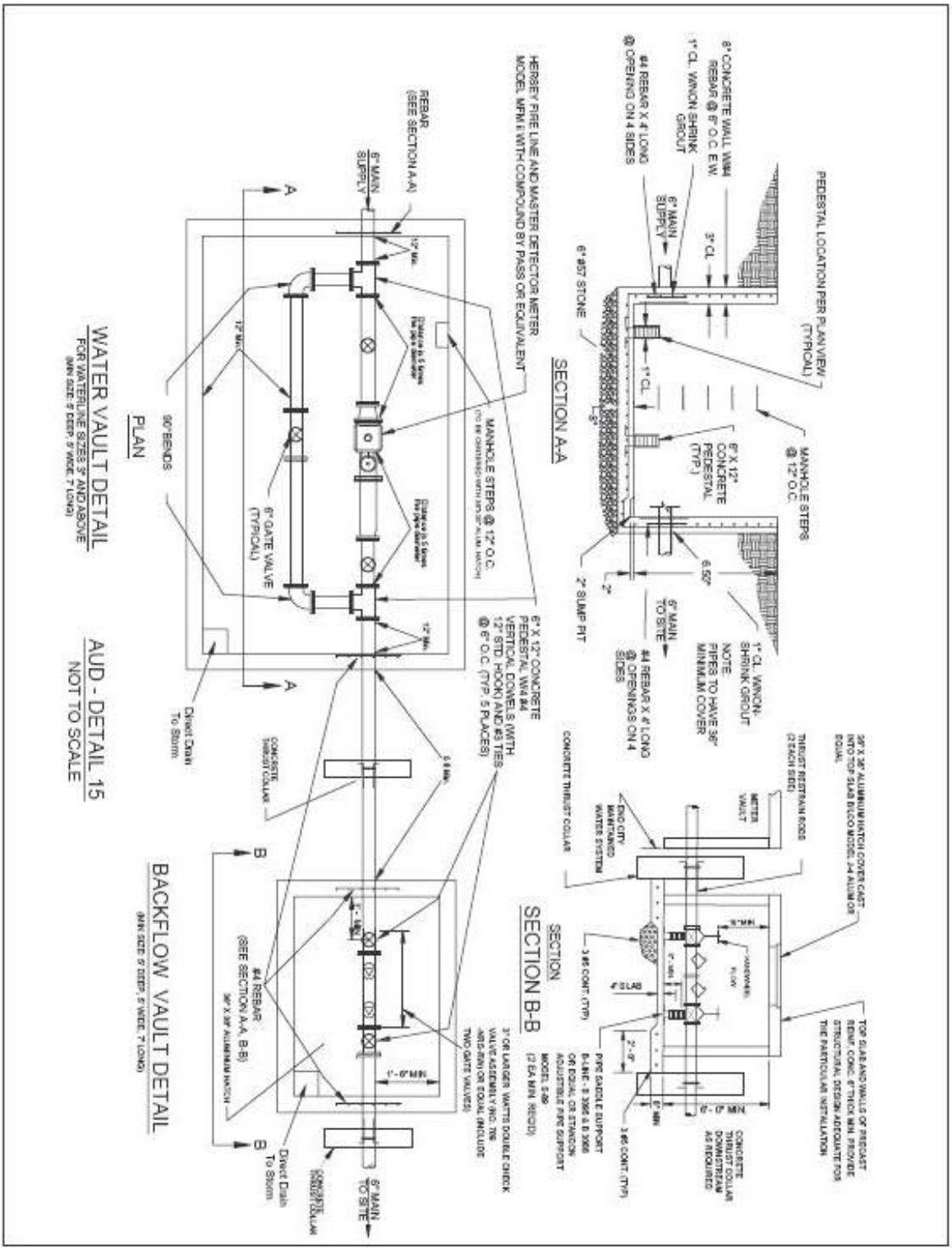
PEDESTAL LOCATION PER PLAN VIEW (TYPICAL)
8" CONCRETE WALL W/#4 REBAR @ 8" O.C. E.W.
1" CL. WAKON SHRINK GROUT
3" CL
6" MAIN SUPPLY
#4 REBAR X 4' LONG @ OPENING ON 4 SIDES
6" #57 STONE
SECTION A-A
HERSEY FIRE LINE AND MASTER DETECTOR METER MODEL MFM II WITH COMPOUND BY PASS OR EQUIVALENT
REBAR (SEE SECTION A-A)
6" MAIN SUPPLY
12" Min.
MANHOLE STEPS @ 12" O.C.
6" X 12" CONCRETE PEDESTAL (TYP.)
MANHOLE STEPS @ 12" O.C.
1" CL
6.50"
2"
2" SUMP PIT
6" MAIN TO SITE
1" CL. WAKON SHRINK GROUT
NOTE: PIPES TO HAVE 36" MINIMUM COVER
#4 REBAR X 4' LONG @ OPENINGS ON 4 SIDES
6" X 12" CONCRETE PEDESTAL W/#4 #4 VERTICAL DOWELS (WITH 12" STD. HOOK) AND #3 TIES @ 6" O.C. (TYP. 5 PLACES)
6" GATE VALVE (TYPICAL)
90° BENDS
Direct Drain To Storm
CONCRETE THRUST COLLAR
WATER VAULT DETAIL
FOR WATERLINE SIZES 3" AND ABOVE
(MIN. SIZE: 8' DEEP, 5' WIDE, 7' LONG)
PLAN
AUD - DETAIL 15
NOT TO SCALE
30" X 36" ALUMINUM HATCH COVER CAST INTO TOP SLAB BY LCO MODEL J-4 ALUM OR EQUAL
THRUST RESTRAIN RODS (2 EACH SIDE)
METER VAULT
END CITY MAINTAINED WATER SYSTEM
CONCRETE THRUST COLLAR
SECTION B-B
4" SLAB
3 #5 CONT. (TYP)
PIPE SADDLE SUPPORT B-LINE - B 3066 & B 3068 OR EQUAL OR STANDON ADJUSTABLE PIPE SUPPORT MODEL S-80 (2 EA MIN. REQ'D)
3" OR LARGER WATTS DOUBLE CHECK VALVE ASSEMBLY (NO. 709 WITS-FAN OR EQUAL (INCLUDE TWO GATE VALVES)
TOP SLAB AND WALLS OF PRECAST REINF. CONC. 6" THICK MIN. PROVIDE STRUCTURAL DESIGN ADEQUATE FOR THE PARTICULAR INSTALLATION
CONCRETE THRUST COLLAR DIMENSIONS AS REQUIRED
6" MIN
1'-0" MIN
#4 REBAR (SEE SECTION A-A, B-B)
30" X 30" ALUMINUM HATCH
1'-6" MIN
Direct Drain To Storm
6" MAIN TO SITE
BACKFLOW VAULT DETAIL
(MIN. SIZE: 8' DEEP, 5' WIDE, 7' LONG)

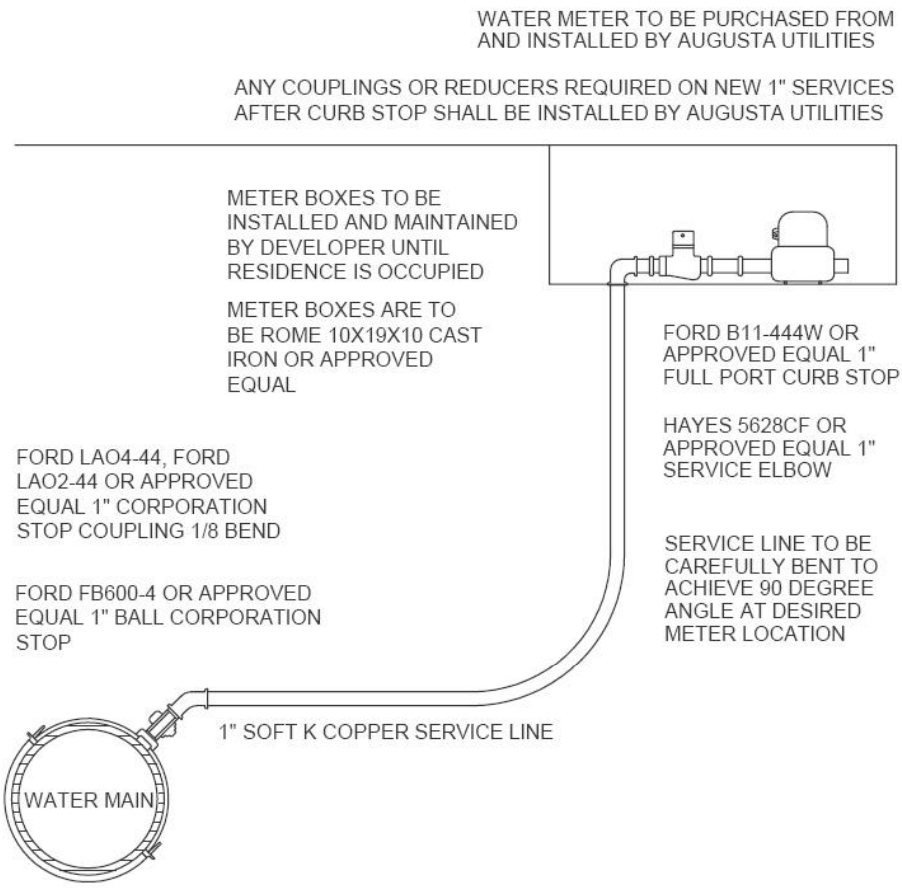

AUD - DETAIL 16
WATER SERVICE
NOT TO SCALE

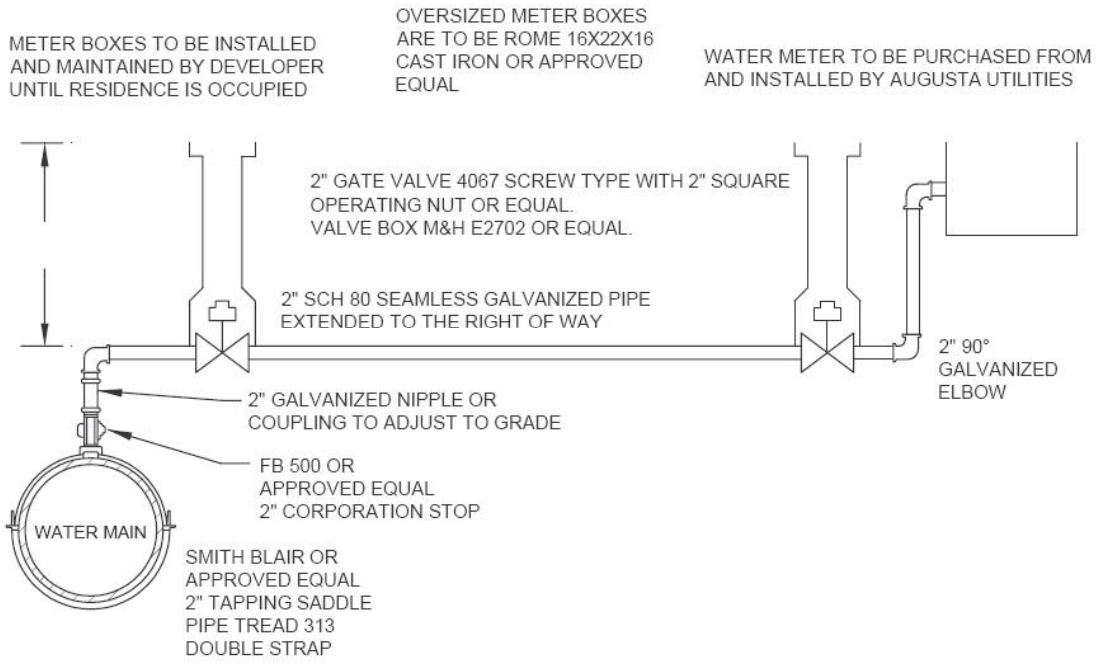

AUD - DETAIL 17
2" WATER SERVICE
NOT TO SCALE

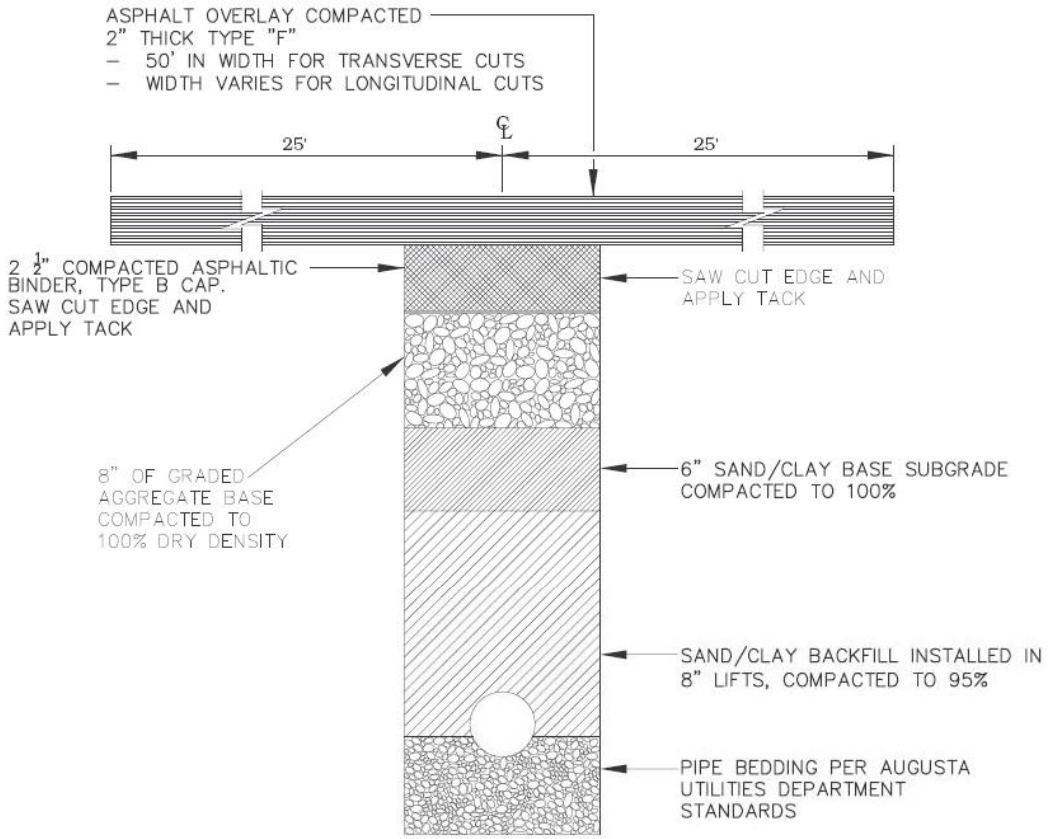

1. THIS DETAIL SHALL APPLY TO AUGUSTA UTILITIES DEPARTMENT BOND PROJECTS ONLY.
2. TOP 10 1/2" OF TRENCH TO BE GRADED AGGEGATE BASE. TOP 2 1/2" OF GRADED AGGREGATE BASE TO BE REMOVED AND REPLACED WITH TYPE B ASPHALT BINDER UPON INSTALLATION OF ASPHALT CAP.
3. DETAIL SHOWS A TRANSVERSE CROSS SECTION. OVERLAY WIDTH MAY VARY FOR LONGITUDINAL CUTS.

AUD - DETAIL 18
AUGUSTA UTILITIES DEPARTMENT BOND PROJECT
ROAD CUT DETAIL
(PIPE IN EXISTING ROADWAY)

NOT TO SCALE

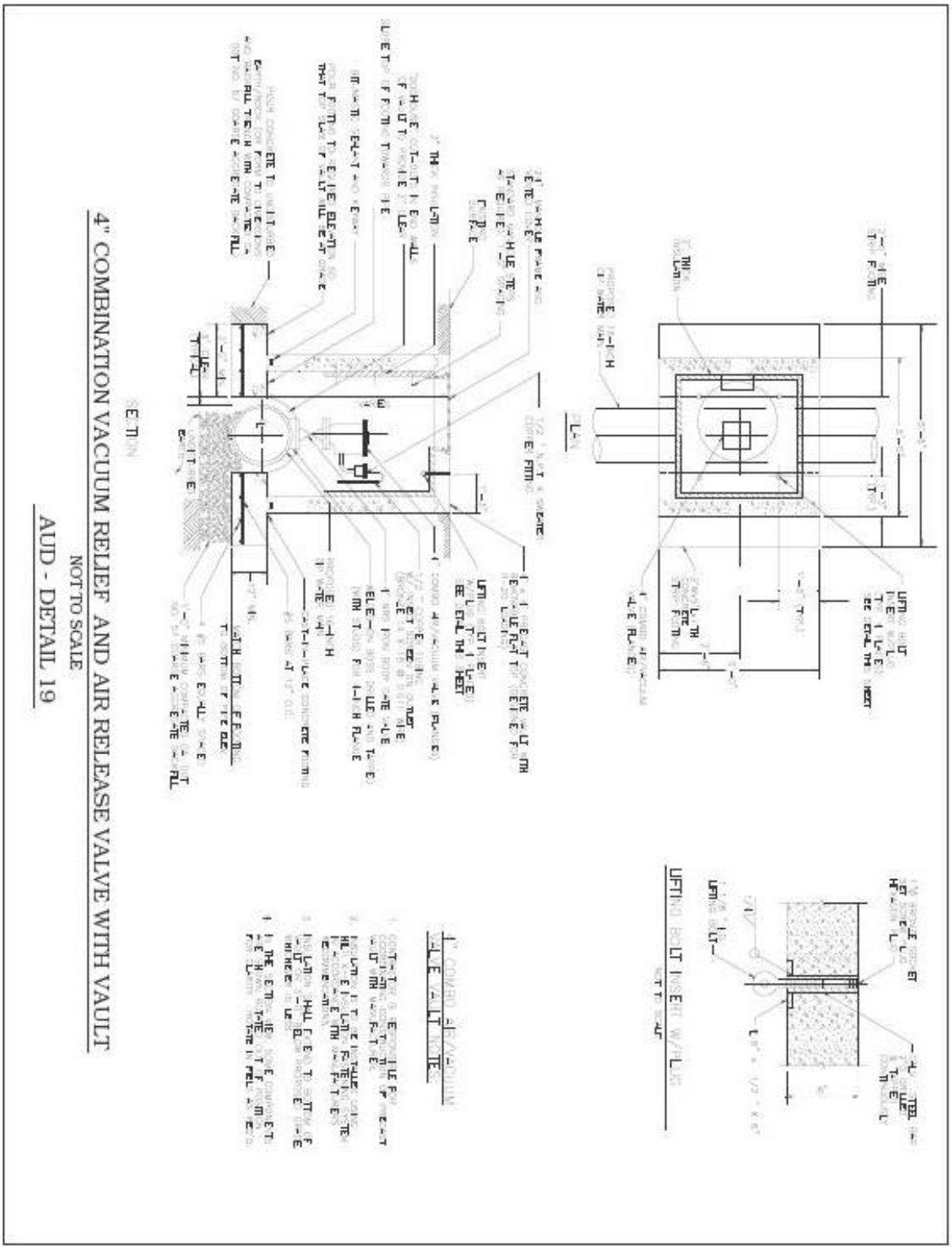

4" COMBINATION VACUUM RELIEF AND AIR RELEASE VALVE WITH VAULT

NOT TO SCALE

AUD - DETAIL 19

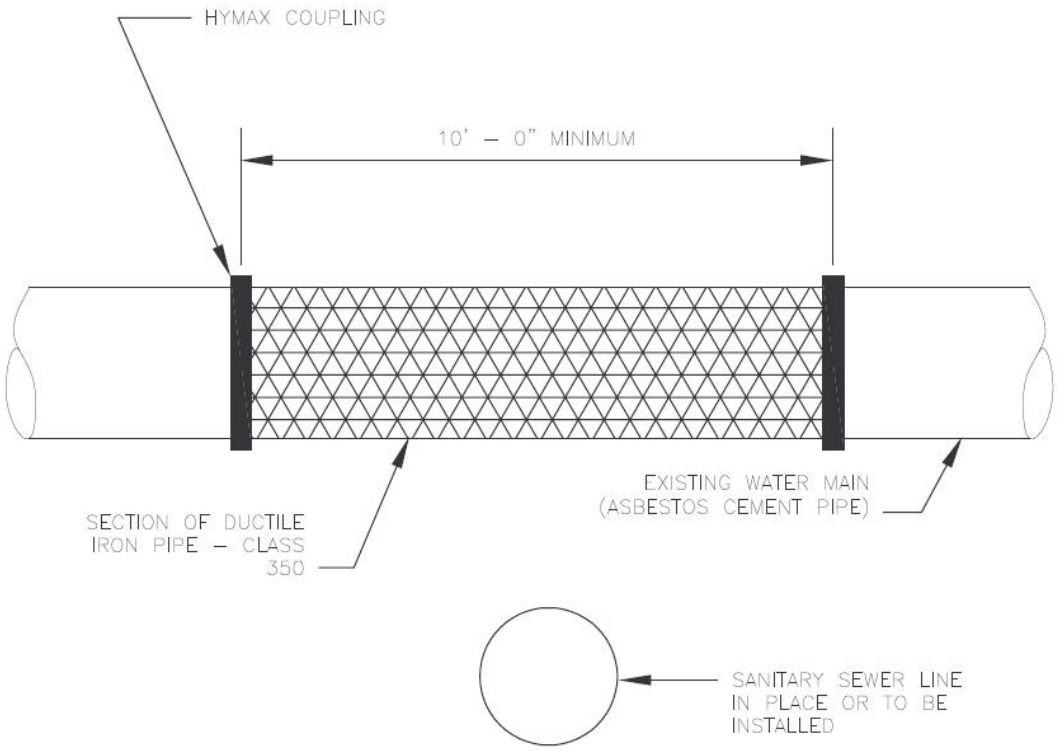

PROCEDURE
1. CUT AND REMOVE SECTION OF EXISTING ASPHALTIC CEMENT PIPE.
2. REPLACE WITH SECTION OF DUCTILE IRON PIPE CLASS 350.
3. INSTALL HYMAX COUPLINGS MANUFACTURED BY DRESSER OR EQUAL.

AUD - DETAIL 20
SANITARY SEWER MAIN INSTALLATION

(IN AREA OF EXISTING ASBESTOS CEMENT PIPE CROSSING)
NOT TO SCALE

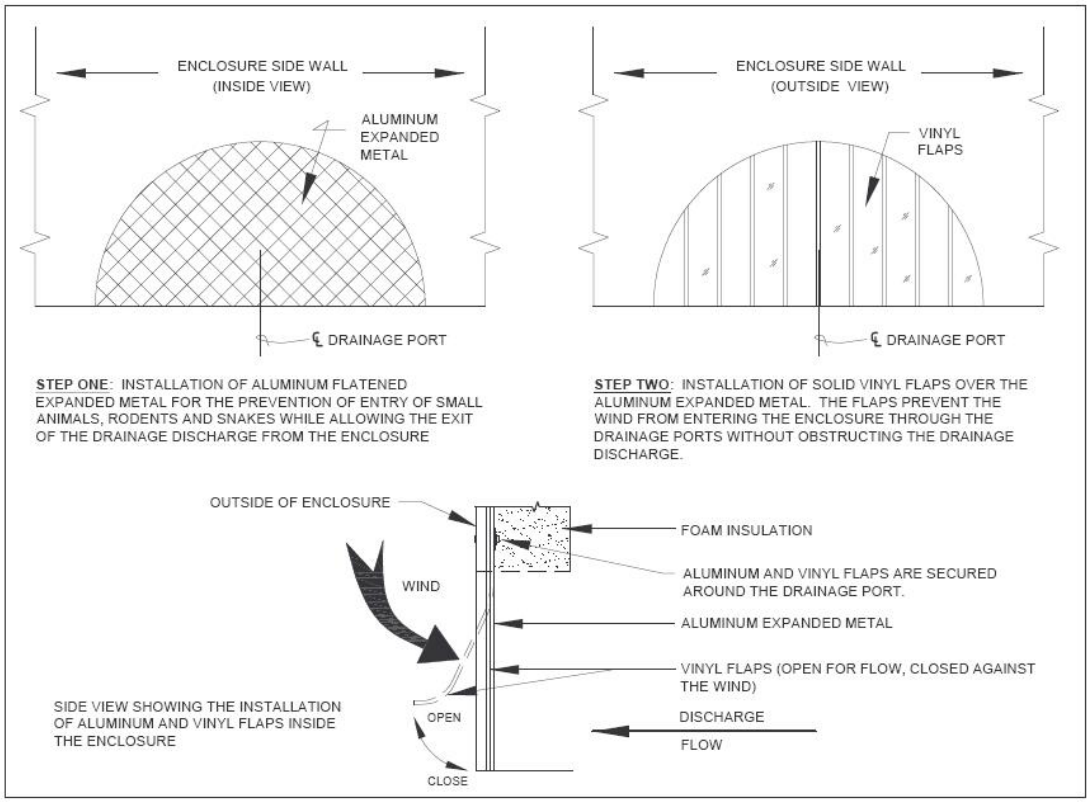

NOTE:

1. ALL REDUCED PRESSURE ZONE ASSEMBLIES (RPZ's) ARE TO BE INSTALLED ABOVE GROUND OR INSIDE THE FACILITY TO PROTECT FROM FREEZING. EXPOSURE TO FREEZING WILL RESULT IN IMPROPER FUNCTIONING OF AN RPZ AND MAY CAUSE UN-REPAIRABLE DAMAGE TO THE ASSEMBLY
2. **SOUTHERN BUILDING CODE SECTION 304.4 - FREEZING (1994):** A WATER, SOIL OR WASTE PIPE SHALL NOT BE INSTALLED OR PERMITTED OUTSIDE OF A BUILDING OR CONCEALED IN OUTSIDE WALLS OR ANY PLACE WHERE THEY MAY BE SUBJECT TO FREEZING TEMPERATURES, UNLESS ADEQUATE PROVISION IS MADE TO PROTECT THEM FROM FREEZING.
3. FACILITIES REQUIREING AN RPZ MAY BE ALLOWED TO INSTALL IT INSIDE PROVIDED THAT EITHER: THERE ARE NO OTHER CONNECTIONS BETWEEN THE METER AND THE BUILDING **AND** IT IS UNLIKELY ONE WOULD BE INSTALLED IN THE FUTURE, **OR** A DOUBLE CHECK IS INSTALLED AT THE METER.
4. ALL ABOVE GROUND ENCLOSURES FOR RPZ's ARE TO BE SIZED TO THE RPZ SIZE OR LARGER PER MANUFACTURER'S SPECIFICATIONS. E.G. A TWO-INCH RPZ MUST GO IN AN ENCLOSURE DESIGNED FOR A TWO-INCH OR LARGER RPZ.
5. IF A PERIMETER FOOTER IS USED THEN CLEAN GRAVEL COVERING THE ENTIRE BOTTOM OF THE ENCLOSURE MUST BE A FULL TWELVE INCHES (12") DEEP.
6. ALL ENCLOSURES ARE TO BE DESIGNED WITH DRAIN OPENINGS LARGE ENOUGH TO ACCOMODATE A FULL DISHARGE OF THE ASSEMBLY.

AUD DETAIL - 21
DRAIN DETAIL FOR RPZ BOX ENCLOSURE

NOT TO SCALE

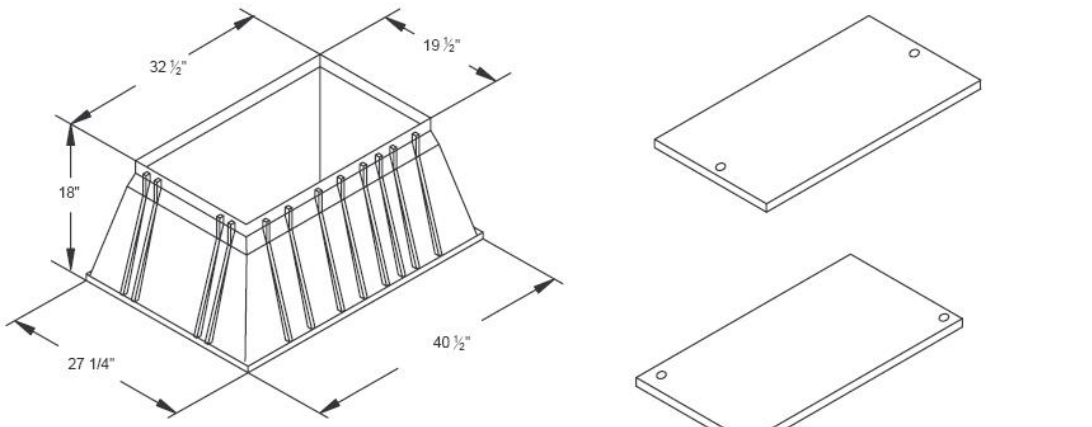

CARSON IND. SERIES 1730D BOX W/COVER
(OR EQUIVALENT)
USED FOR ALL ASSEMBLIES 2" AND SMALLER

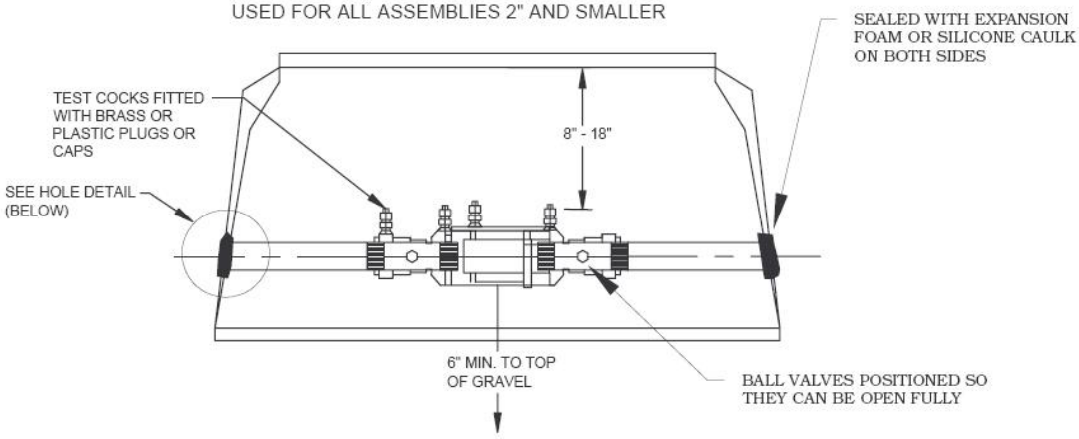

DOUBLECHECK ASSEMBLY DETAIL

HOLE DETAIL
INSIDE VIEW

AUD DETAIL - 22
DOUBLE CHECK ASSEMBLY INSTALLATION
NOT TO SCALE

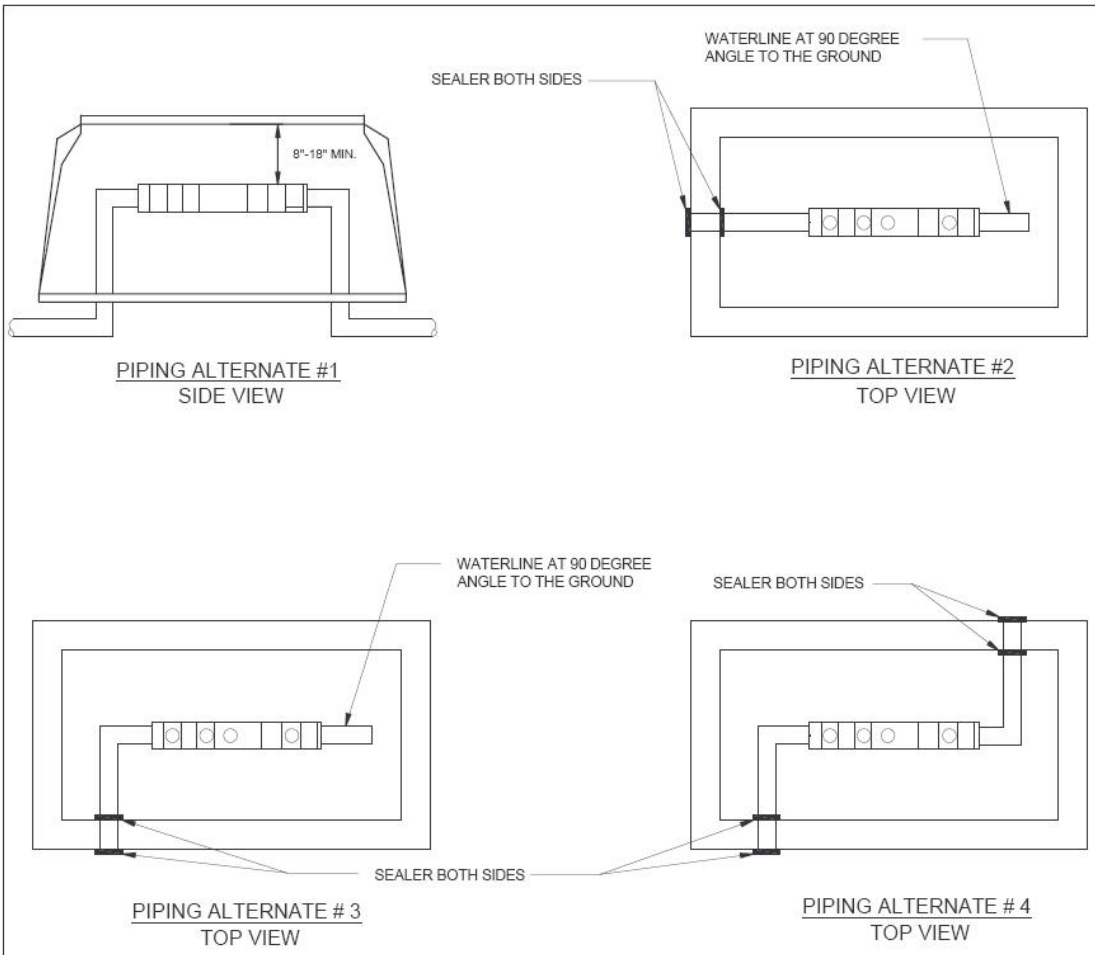

NOTES:

1. ASSEMBLIES SHOULD BE CENTERED IN THE BOX TO ALLOW ACCESS FOR TESTING AND REPAIR
2. BOX MUST NOT REST ON THE WATERLINE.
3. ENTRY AND EXIT POINTS OF THE WATERLINE MUST BE SEALED ON BOTH SIDES TO PREVENT ENTRY OF WATER AND DIRT. SEE DOUBLE CHECK ASSEMBLY AND HOLE DETAIL.
4. MINIMUM CLEARANCE TO BE MAINTAINED;
   - 8"-18" TOP OF ASSEMBLY TO TOP OF BOX
   - 6" FROM BOTTOM OF DEVICE TO TOP OF GRAVEL.
5. A SMALLER BOX MAY BE USED, WITH PRIOR APPROVAL OF THE INSPECTOR, IF SPACE RESTRICTIONS WILL NOT ALLOW INSTALLATION OF THE 1730D OR ITS WQUIVALENT

AUD DETAIL - 23
DOUBLE CHECK VALVE ASSEMBLY VARIATIONS

NOT TO SCALE

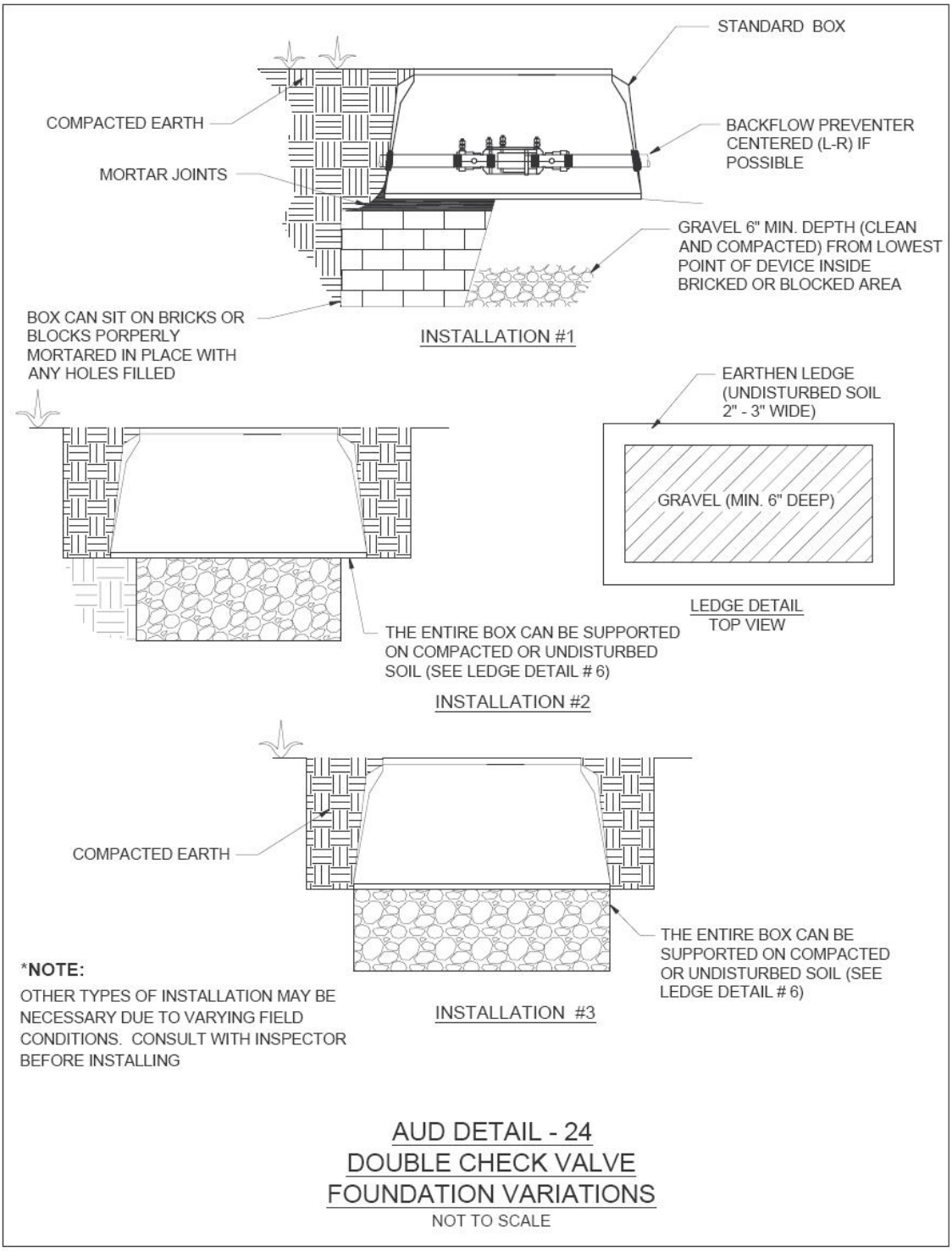

AUD DETAIL - 24
DOUBLE CHECK VALVE
FOUNDATION VARIATIONS
NOT TO SCALE

TWO PIECE BOX

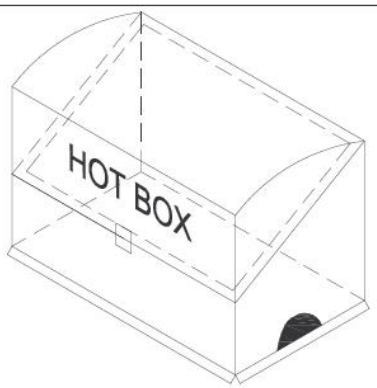

NOTE: BOX SHOULD BE HEATED OR INSULATED TO PROTECT FROM FREEZING

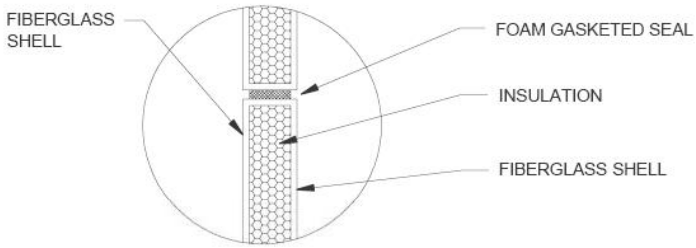

SIDE VIEW OF LIP SEAL

STANDARD COLORS:
- WHITE
- BEIGE

PHYSICAL PROPERTIES

MODEL NO.	I.P.S.	INSIDE DEPTH	INSIDE WIDTH	INSIDE HEIGHT	INSULATION "R" VALUE	DRAINAGE CAPACITY
.75	3/4" - 1"	11"	19"	22"	8.0	180
1	3/4" - 1"	13"	27"	23"	8.0	180
1.5	3/4" - 1 1/2"	21"	33"	23"	8.0	575 GPM
2	1 1/4" - 2"	13"	39"	35"	8.0	575 GPM

FEATURES

FIBERGLASS CONSTRUCTION, DRAINAGE CAPACITY (RPZ) DEVICES, ENGINEERED HEATER SIZING (PROTECTION FOR -30°F), TESTING / MAINTENANCE ACCESS, GROUND ANCHOR CAPABILITIES AND LOCKABLE LID.

ENCLOSURE: HOTBOX OR EQUIVALENT BOX SIZED TO ASSEMBLY SIZE 3/4" TO 2"

AUD DETAIL - 25
REDUCED PRESSURE ZONE ASSEMBLY
INSTALLATION
NOT TO SCALE

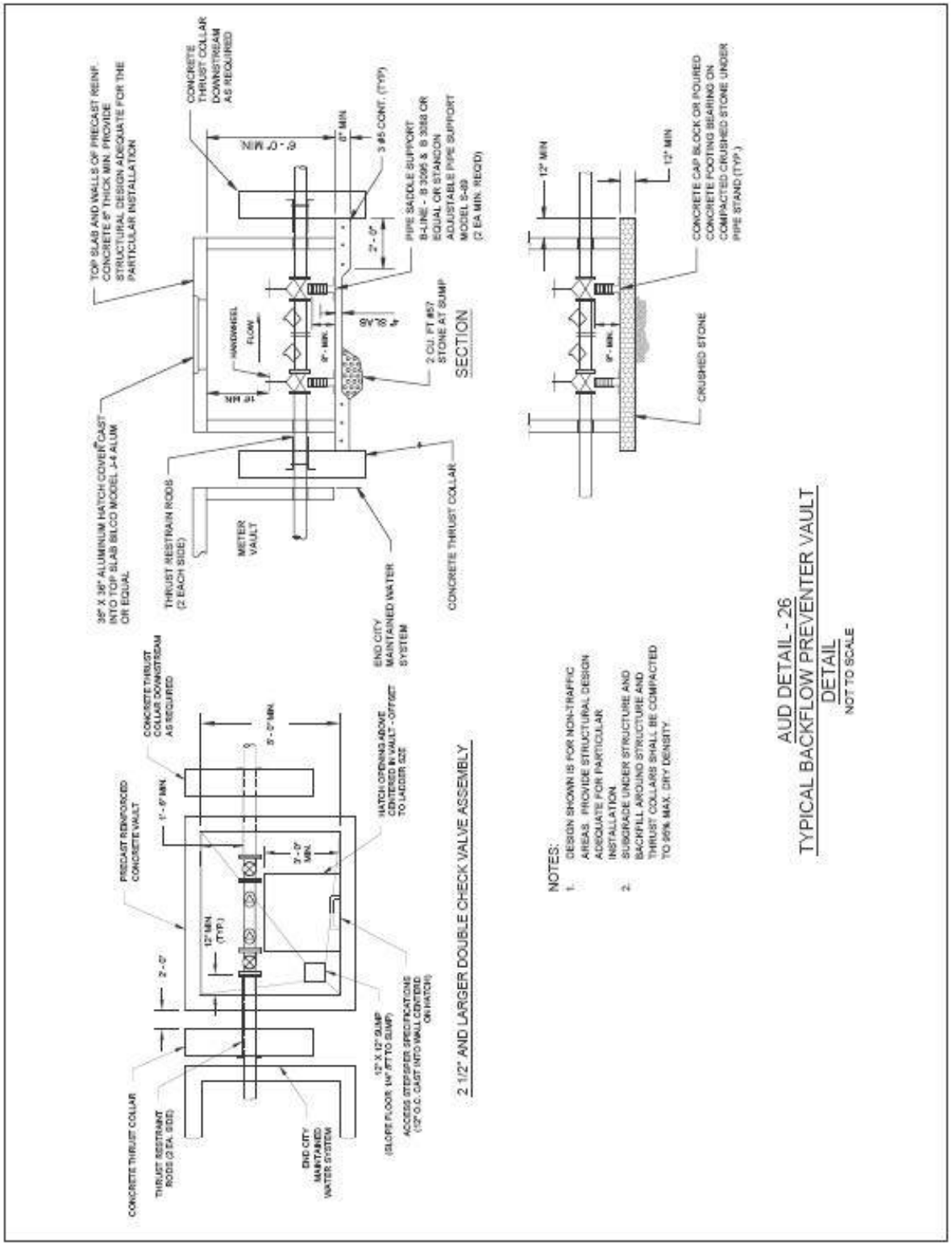
TOP SLAB AND WALLS OF PRECAST REINF. CONCRETE 6" THICK MIN. PROVIDE STRUCTURAL DESIGN ADEQUATE FOR THE PARTICULAR INSTALLATION
CONCRETE THRUST COLLAR DOWNSTREAM AS REQUIRED
6' - 0" MIN.
6" MIN
3 #5 CONT. (TYP)
PIPE SADDLE SUPPORT B-LINE - B 3095 & B 3088 OR EQUAL OR STANDON ADJUSTABLE PIPE SUPPORT MODEL S-89 (2 EA MIN. REQ'D)
2' - 0"
HANDWHEEL
FLOW
18" MIN
8" MIN
2 CU. FT #57 STONE AT SUMP
SECTION
36" X 36" ALUMINUM HATCH COVER CAST INTO TOP SLAB BILCO MODEL J-4 ALUM OR EQUAL
THRUST RESTRAIN RODS (2 EACH SIDE)
METER VAULT
CONCRETE THRUST COLLAR
END CITY MAINTAINED WATER SYSTEM
12" MIN
12" MIN
CONCRETE CAP BLOCK OR POURED CONCRETE FOOTING BEARING ON COMPACTED CRUSHED STONE UNDER PIPE STAND (TYP.)
CRUSHED STONE
CONCRETE THRUST COLLAR DOWNSTREAM AS REQUIRED
5' - 0" MIN.
1' - 6" MIN.
PRECAST REINFORCED CONCRETE VAULT
HATCH OPENING ABOVE CENTERED IN VAULT - OFFSET TO LADDER SIZE
3' - 0" MIN.
12" MIN (TYP.)
2' - 0"
12" X 12" SUMP (BELOW FLOOR, 1/4" PIT TO SUMP)
ACCESS STEPPER SPECIFICATIONS (12" O.C. CAST INTO WALL CENTERED ON HATCH)
CONCRETE THRUST COLLAR
THRUST RESTRAINT RODS (2 EA. SIDE)
END CITY MAINTAINED WATER SYSTEM
2 1/2" AND LARGER DOUBLE CHECK VALVE ASSEMBLY
NOTES:
1. DESIGN SHOWN IS FOR NON-TRAFFIC AREAS. PROVIDE STRUCTURAL DESIGN ADEQUATE FOR PARTICULAR INSTALLATION.
2. SUBGRADE UNDER STRUCTURE AND BACKFILL AROUND STRUCTURE AND THRUST COLLARS SHALL BE COMPACTED TO 95% MAX. DRY DENSITY.
AUD DETAIL - 26
TYPICAL BACKFLOW PREVENTER VAULT
DETAIL
NOT TO SCALE

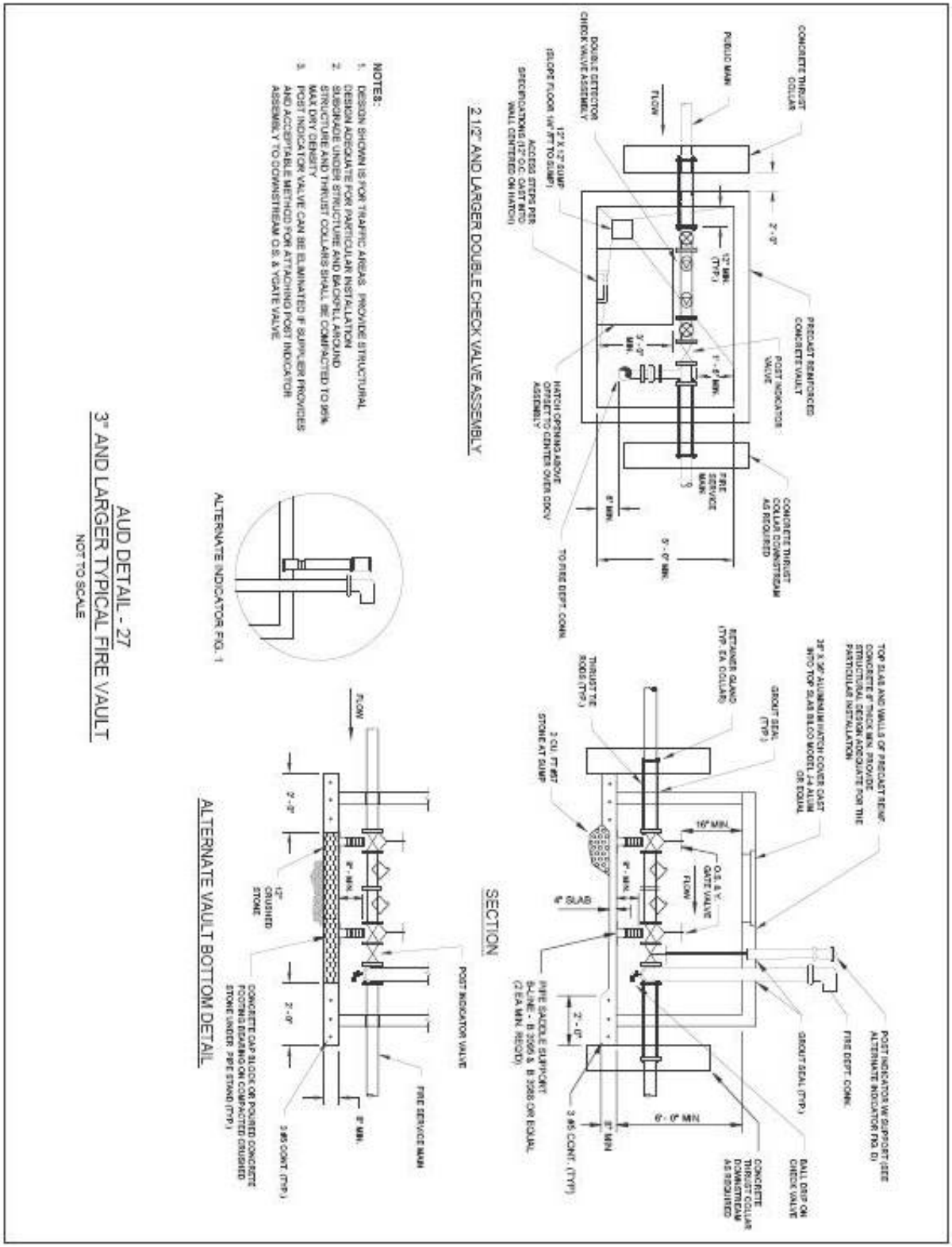
CONCRETE THRUST COLLAR
PUBLIC MAIN
FLOW
DOUBLE DETECTOR CHECK VALVE ASSEMBLY
12" X 12" SUMP (SLOPE FLOOR 1/4" PER TO SUMP)
ACCESS STEPS PER SPECIFICATIONS (12" CLEAR TO WALL CENTERED ON HATCH)
2' - 0"
12" MIN. (TYP.)
3' - 0" MIN.
1' - 6" MIN.
PRECAST REINFORCED CONCRETE VAULT
POST INDICATOR VALVE
FIRE SERVICE MAIN
HATCH OPENING ABOVE OFFSET TO CENTER OVER GDCV ASSEMBLY
CONCRETE THRUST COLLAR DOWNSTREAM AS REQUIRED
8" MIN.
TO FIRE DEPT. CONN.
5' - 0" MIN.
2 1/2" AND LARGER DOUBLE CHECK VALVE ASSEMBLY
NOTES:
1. DESIGN SHOWN IS FOR TRAFFIC AREAS. PROVIDE STRUCTURAL
2. DESIGN ADEQUATE FOR PARTICULAR INSTALLATION
SUBGRADE UNDER STRUCTURE AND BACKFILL AROUND
STRUCTURE AND THRUST COLLARS SHALL BE COMPACTED TO 95%
MAX DRY DENSITY
3. POST INDICATOR VALVE CAN BE ELIMINATED IF SUPPLIER PROVIDES
AND ACCEPTABLE METHOD FOR ATTACHING POST INDICATOR
ASSEMBLY TO DOWNSTREAM O.S. & Y GATE VALVE
ALTERNATE INDICATOR FIG. 1
TOP SLAB AND WALLS OF PRECAST REINF. CONCRETE 8" THICK MIN. PROVIDE STRUCTURAL DESIGN ADEQUATE FOR THE PARTICULAR INSTALLATION
36" X 36" ALUMINUM HATCH COVER CAST INTO TOP SLAB BILCO MODEL J-4 ALUM OR EQUAL
RETAINER GLAND (TYP. EA. COLLAR)
GROUT SEAL (TYP.)
THRUST TIE RODS (TYP.)
2 CU. FT. #57 STONE AT SUMP
16" MIN.
O.S. & Y. GATE VALVE
FLOW
4" SLAB
PIPE SADDLE SUPPORT SLINE - B 3566 & B 3268 OR EQUAL (2 EA. MIN. REQD)
2' - 0"
6' - 0" MIN.
8" MIN
3 MS CONT. (TYP)
POST INDICATOR VW SUPPORT (SEE ALTERNATE INDICATOR FIG. 1)
FIRE DEPT. CONN.
GROUT SEAL (TYP.)
BALL DISC ON CHECK VALVE
CONCRETE THRUST COLLAR DOWNSTREAM AS REQUIRED
SECTION
FLOW
2' - 0"
12" CRUSHED STONE
8" MIN.
POST INDICATOR VALVE
FIRE SERVICE MAIN
8" MIN.
2' - 0"
CONCRETE CAP BLOCK OR POURED CONCRETE FOOTING BEARING ON COMPACTED CRUSHED STONE UNDER PIPE STAND (TYP.)
3 MS CONT. (TYP.)
ALTERNATE VAULT BOTTOM DETAIL
AUD DETAIL - 27
3" AND LARGER TYPICAL FIRE VAULT
NOT TO SCALE

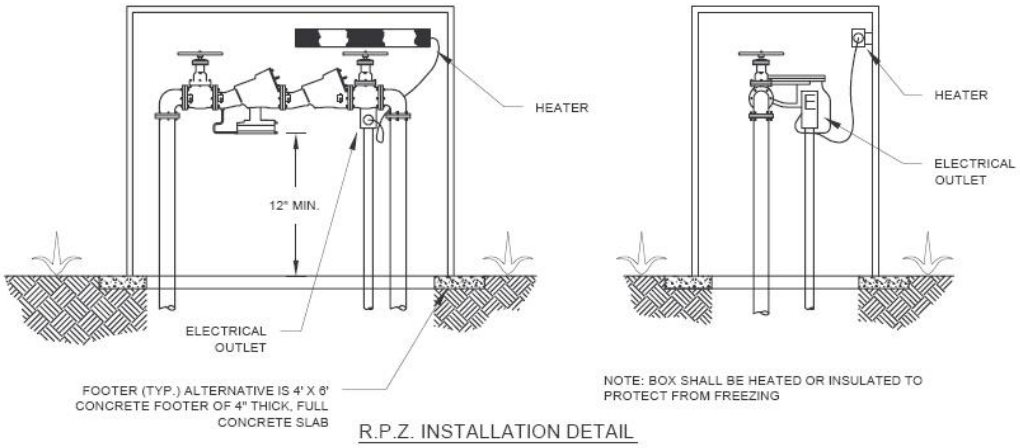

R.P.Z. INSTALLATION DETAIL

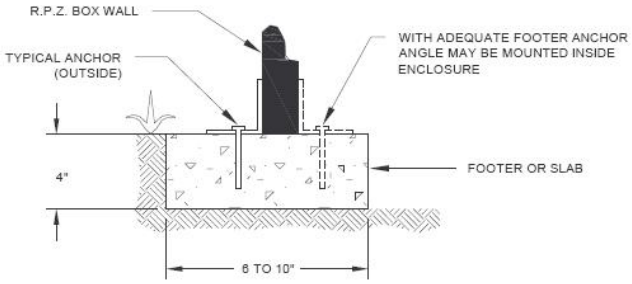

FOOTER OR CONCRETE SLAB (R.P.Z. BOX)

NOTE: IF A PERIMETER FOOTER IS USED THEN THERE MUST BE GRAVEL COVERING THE ENTIRE BOTTOM OF THE ENCLOSURE A FULL TWELVE INCHES DEEP.

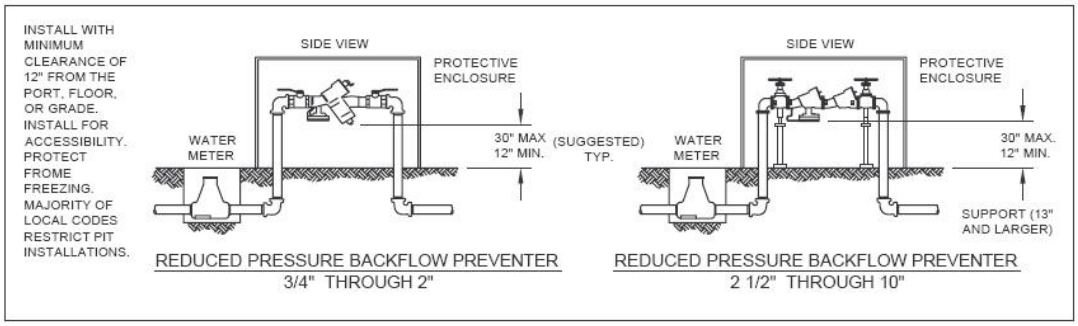

REDUCED PRESSURE BACKFLOW PREVENTER 3/4" THROUGH 2"

REDUCED PRESSURE BACKFLOW PREVENTER 2 1/2" THROUGH 10"

AUD DETAIL - 28
REDUCED PRESSURE ZONE ASSEMBLY INSTALLATION

NOT TO SCALE

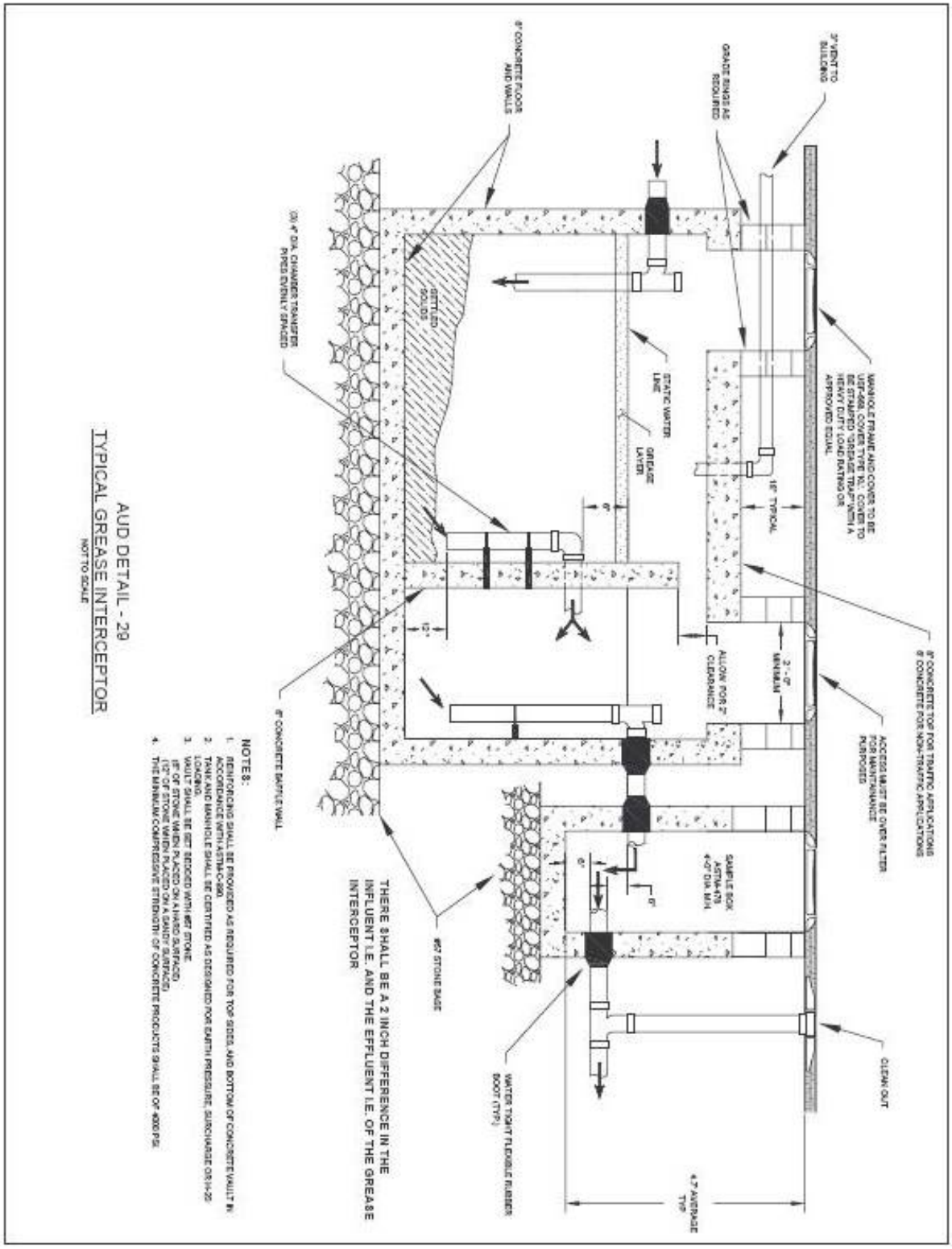

NOTES:

1. REINFORCING SHALL BE PROVIDED AS REQUIRED FOR TOP SIDES AND BOTTOM OF CONCRETE VAULT IN ACCORDANCE WITH ASTM-C-890
2. TANK AND MANHOLE SHALL BE CERTIFIED AS DESIGNED FOR EARTH PRESSURE, SURCHARGE OR H-20 LOADING.
3. VAULT SHALL BE BED ED WITH #57 STONE.
   (8" OF STONE WHEN PLACED ON A HARD SURFACE)
   (12" OF STONE WHEN PLACED ON A SANDY SURFACE)
4. THE MINIMUM COMPRESSIVE STRENGTH OF CONCRETE PRODUCTS SHALL BE OF 4000 PSI.

AUD DETAIL - 29

TYPICAL GREASE INTERCEPTOR

NOT TO SCALE

14.7 ERRATA

(1) Additional information in reference to section 14.2.2.2.12

Fire hydrants must conform to the specifications for National Standard fire hydrants for ordinary water works service of the American Water Works Association, and each fire hydrant installed after **January 1, 2008** shall include an Anti Terrorism Valve designed to protect against accidental backflow and intentional contamination of drinking water via the hydrant. The ATV shall be a stealth check valve located internal to the upper barrel of the hydrant and shall consist of four main parts:

1) a sleeve-insert valve seat, made of E coated or fusion bonded epoxy steel. The top of the valve seat shall have a machined slot to accommodate a EPDM quad ring which will provide an impenetrable seal between the seat and the valve.
2) a valve made of brass with machined slots to accommodate an o-ring between the valve and the upper stem.
3) a stainless steel machined upper stem will replace the original upper stem. The brass valve shall be attached to the upper stem in such a manner as to provide free vertical movement along the shaft, and
4) a stainless steel spring that shall fit around the upper stem and be of adequate compression strength and length that sufficient pressure is placed on the valve to provide an impenetrable seal when the hydrant is not in use and yet allow water to flow freely when the hydrant is flowed.

Installation of the ATV shall be made by a technician certified by the manufacturer.

AUGUSTA UTILITIES DEPARTMENT

Augusta
GEORGIA

ENGINEERING DIVISION

BACKFLOW PREVENTION SECTION

SPECIFICATIONS AND DETAILS FOR INSTALLATION OF BACKFLOW ASSEMBLIES

(JANUARY 2000 updated MAY 2005)

TABLE OF CONTENTS

Introduction 3

General Information 4

Category I- High Risk 4

Category II – Medium Risk 5

Category III – Low Risk 5

General Installation Requirements 5

Installation Specifications 6

3” and smaller Double Check Valve Assembly, Inground Enclosures 6

4” And Larger Double Check Valve Assembly, Vault Installations 7

Reduced Pressure Zone Assembly Installations, All Sizes 8

Notice to Customers and Installers 9

Installation Detail Drawings 10-19

Double Check Assembly Installation 3” and smaller 10

Double Check Assembly Foundation Variations 3” and smaller 11

Double Check Assembly Piping Variations 3” and smaller 12

Reduced Pressure Zone Assembly, Box Enclosure 13

Reduced Pressure Zone Assembly Installations 14

Drain Detail and Additional Notes for RPZ’s 15

4” and Larger Double Check Valve Assembly Vault Details 16-17

4” and Larger Typical Fire Vault Details 18-19

Backflow Prevention Assembly Test/Repair Form 20

Prepared by Leroy Anderson, Resident Engineer II/Backflow Manager January 5, 2000

INTRODUCTION

The City of Augusta, Georgia's Utilities Department by order of the Georgia Environmental Protection Division is requiring all commercial/industrial facilities to install backflow prevention assemblies on the potable and fire service lines where city water is supplied to their facilities. All facilities must have an approved backflow prevention device installed by September 1, 2000 or be subject to enforcement action which may include termination of water service if compliance is not met. There are currently more than 6000 commercial/industrial accounts supplied by the city, many of whom may have backflow assemblies installed. However, there are numerous commercial/industrial facilities that do not have these devices in place.

The Backflow Prevention Section has compiled the following information in an effort to aid companies and individuals involved in the installation of new and upgraded backflow prevention assemblies. This information applies only to facilities connected to the City of Augusta's potable water system throughout Augusta-Richmond County, Georgia.

The Information is broken down into easily identifiable sections where general and specific installation information for various installation situations can quickly be referenced. If followed, the material provided should significally increase installations that are passed during the first inspection by the Backflow Prevention Section. This should reduce the need for reworking new and upgraded installations, thus saving the installer time and the need for return trips to the job.

The information is to be used as a guide for general installations that encounter no unusual circumstances. When unusual situations are encountered please do not hesitate to contact the Backflow Prevention Section and review the situation with them. This will save you time and a possible failed inspection.

Please note that this information is subject to change. If at any time there are questions concerning the information provided or the installation of the backflow prevention assemblies please call The Office of Engineering Services/Backflow Prevention Section at 706-312-4145 for assistance. It is the City's hope that this information will be helpful to those involved with the installation of the backflow prevention assemblies.

Utilities Department
Engineering Division
Backflow Prevention Section
360 Bay Street Suite 180
Augusta, Ga. 30901

STANDARD SPECIFICATIONS AND DETAILS FOR THE INSTALLATION OF BACKFLOW PREVENTION ASSEMBLIES

General Information

The Type of Backflow Prevention Assembly is determined by the City of Augusta using the criteria and guidelines as set forth in the **American Water Works Association's Manual 14, Second Edition, titled Recommended Practice for Backflow Prevention and Cross-Connection Control**. Assemblies shall have current endorsement from the University of Southern California; Foundation for Cross-Connection and Hydraulic Research, which incorporates standards AWWA C510-89 for double check assemblies, and AWWA C511-89 for reduced pressure zone assemblies or approved equal certifications. The City of Augusta's Backflow Prevention Section must approve any deviation from these specifications in writing prior to the start of installation.

Requirements for the level of backflow protection are based on the hazard category of the user. Hazard categories define the level of hazard potential to the potable water system from backflow or cross-connection based on the likelihood of and type of material subject to backflow or cross-connection incident. The hazard categories are described below but are not 100% inclusive of all facilities in a respective category.

CATEGORY I –HIGH RISK

Considered to be potential source of a contaminate. Contaminates are toxic substances or those creating a health hazard due to the nature of the product, raw materials or processes in use by the customer. This Category would include such customers **as hospitals, mortuaries, doctor's offices, dentist offices, veterinary offices, metal plating operations, chemical companies, pest control companies and other commercial/industrial customers using toxic chemicals.** Water Service connections to these customers must be protected by a **REDUCED PRESSURE ZONE (RPZ)** (up to three inch (3") Watts Model # 009 or equivalent, Four inch (4") and larger Watts Model #909 or equivalent) **BACKFLOW PREVENTION ASSEMBY or an AIR GAP** to provide maximum protection. The Alternative to the single RPZ at the meter would be a Double Check Valve (DCVA) Backflow Prevention Assembly at the meter and one or more RPZ's inside the facility at strategic

locations to provide isolation/containment protection for the municipal water system. If the DCV/RPZ installation configuration is used then all assemblies must be tested annually with the reports sent to the Backflow Prevention Office. See details for installation of RPZ'S further in this document.

CATEGORY II-MEDIUM RISK

Considered to be a potential source of a pollutant. Pollutants are substances, which are objectionable in nature such as those causing discoloration, odor or taste in the water. Typical customers in this category would include **commercial businesses such as grocery stores, daycare facilities, multifamily housing on a single meter, office buildings and any premises including residences, with a lawn irrigation system or an auxiliary water supply**. Water Service connections in this category are required to be protected by a minimum of a **DOUBLE CHECK VALVE (DCVA)** (up to Three inch (3") Watts Model # 007 or equivalent, Four inch (4") and larger Watts Model #709 or equivalent)

CATEGORY III-LOW RISK

Those considered being least likely to be a possible source of a contaminant or pollutant. Typically this category includes single family residential customers. **A DUAL CHECK (DUCV)** (¾" and 1" Meters Watts Model #7 or Equivalent) **BACKFLOW PREVENTION ASSEMBLY AT THE METER** shall protect the water service connections to these customers.

BACKFLOW PREVENTION ASSEMBLIES SHALL BE IN SEPARATE BOX OR VAULT AT THE METER.

GENERAL INSTALLATION REQUIREMENTS

1) All Assemblies are to be installed a minimum of 5 times the pipe diameter from the last pipe fitting on the water meter. The City of Augusta's Utilities Department Backflow Prevention Section must approve any variance from this location prior to installation. Failure to obtain a variance prior to installation may cause the device to be relocated. All Backflow devices will be same size as piping serving the premises.(6 inch water line 6 inch device)

2) Due to the location of the water meter at existing facilities it may not be practical to install a backflow assembly device at the water meter. In these instances the Backflow Prevention Section must be contacted to visually inspect and determine the most appropriate location for the backflow device. Once location is determined a written variance will be prepared for the occupant/owner of the facility. Installation prior to inspection may not be acceptable and the backflow device may be required to be relocated.

3) Backflow assemblies shall include a full port ball valve on the inlet and outlet sides. Devices larger than 2 inches may have gate valves. Devices shall be fitted with three ball valve test cocks and a fourth ball valve test cock on the upstream side of the inlet shutoff valve. All Test Cocks shall be fitted with brass, stainless steel or plastic plugs and/or caps to keep the test cocks clean and free of debris. <u>All backflow devices must have a bronze strainer on the inlet side of the backflow device</u>.

4) No galvanized nipples or fittings can be installed directly into/onto an assembly, unless a dielectric or insulating fitting is used to separate the dissimilar metals.

5) All fire systems are required to have **DOUBLE DETECTOR CHECK (DDCA) BACKFLOW PREVENTION ASSEMBLIES** as shown in accompanying details.

6) Reduced pressure zone (**RPZ's can only be installed in the horizontal position per AWWA Manual 14)** , Devices installed outside must have a minimum of twelve inches (12") clearance from the bottom of the device to the ground and in a freeze proof box that will allow for drainage when the device discharges. Additional notes on RPZ installations are in the RPZ Installation Details and Specifications Section of this document.

7) Any Device installed inside, **RPZ'S** can only be installed in the horizontal position per AWWA Manual 14. **Double Check's** must be installed per the manufacture's specifications and be easily accessible for inspection, testing and repair.

8) A certified Backflow Assembly Tester Approved by the City of Augusta must test all assemblies. A current tester list can be obtained from the Augusta Utilities Department Backflow Prevention Section Office.

9) Initial testing must be done within **five (5) working days** of the installation and reports forwarded to the City of Augusta Utilities Department Backflow Prevention Section within **ten (10) Working days**. Assemblies are to tested annually thereafter and reports forwarded to the City within **Ten (10) Working Days** of the test. Failure to test and forward the report within the allotted time may result in removal of the tester's name from the approved list for a minimum of three (3) months. Companies and testers who continually fail to supply test reports within the allotted time may be removed from the approved list for a longer period at the desecration of the Backflow Prevention Section.

INSTALLATION SPECIFICATIONS

3" AND SMALLER DOUBLE CHECK VALVE ASSEMBLY INGROUND ENCLOSURES

1) See the attached box detail sheet for example of the acceptable box used in non-traffic areas. This box or one of near equal dimensions may be used. Installations in concrete or asphalt shall have drop in covers. Installations in grassy areas may have either drop-in covers or covers that overlap the top of the box. If the box is to be set in concrete, asphalt or an area subject to other than foot traffic, the box and cover must be designed for such and installation.

2) Top of box shall be at grade or above to prevent flooding of the installation.

3) The entire box bottom perimeter shall be supported on compacted or undisturbed soil, poured concrete base, complete courses of brick or block property motared in place, or tightly packed clean gravel (#57 Stone or larger) to prevent box from settling. If the service line is at a depth that warrants an adjustment of the box elevation then complete courses of bricks or blocks, properly motared in place, may be used to support the entire box bottom, or a commercial box riser may be used to bring the box top level up to grade or above.

4) The box shall not rest directly on the water line. Pipe cutout holes must be larger than the water line and sealed with expansion foam or silicone chalk to prevent dirt and water from entering the box.

5) The box must have clean, compacted gravel (#57 stone or larger) at least six inches (6”) deep covering the entire bottom to allow for good drainage. No mud, dirt, debris, etc. shall be left in the box.

6) The backflow assembly must:

- ✓ Be clean
- ✓ Be centered in the box if installation will permit
- ✓ Be positioned with test cocks in a vertical position if possible
- ✓ Have no galvanized fittings attached directly into/onto the device
- ✓ Have test cocks fitted with brass, stainless or plastic plugs
- ✓ Have the lowest point of the assembly a minimum of 6” from the gravel (#57 stone or larger)
- ✓ Have top of the device between 8” and 18” from bottom of the cover
- ✓ Have ball valves positioned so they can be opened fully from top or side
- ✓ Be sized to the water meter, i.e. 1” meter will require 1” backflow device
- ✓ Have attached to, or cast in the body, manufactures name, model and serial number, etc.
- ✓ Have a bronze strainer on the inlet side of the device
- ✓ Be tested and pass within **five 5 working days** following installation and test report forwarded to the backflow prevention section within **ten (10) working days**.

4” AND LARGER DOUBLE CHECK VALVE ASSEMBLIES IN VAULTS

1) See the attached vault detail sheets for proper installation of all 3” and larger assemblies in precast, reinforced concrete vaults. Details cover domestic and fire service application. A complete package precast vault per detail may be used.

2) All assemblies must be supported with commercial pipe supports at locations shown on the attached vault detail sheets. In open bottom vaults the pipe supports must be concrete cap blocks or poured concrete footing place on compacted soil or directly on top of compacted clean gravel (#57 stone or larger). Concrete Blocks, bricks, pieces of wood, etc. are not acceptable as pipe supports and shimming is not allowed.

3) There must be a minimum of eight inches (8”) Clearance between the bottom of the device and the gravel or vault bottom.

4) Open bottom vaults must have clean, compacted gavel (#57 stone or larger) at least twelve inches (12”) deep covering the entire bottom to allow for good drainage, with no trash, mud or other debris left in the vault.

5) Inside of the vault must be free of dirt, mud, standing water and any other debris. Steps are also to be free of mud and dirt.
6) The ends of the vault where the pipe enters and exits must be concreted in or property blocked in with mortared brick or blocks.

7) Minimum size three foot (3') X three foot (3') aluminum hatch lid to be offset to step side of vault and centered over steps.

8) Steps are to be on twelve inches (12") Centers maximum and centered in the hatch open.

9) In fire service vaults the detector check must be on the opposite side of the vault from the steps.

10) Solid bottom vaults shall be set in such a manner to allow for complete drainage through drainage sump openings that are provided.

11) The backflow assembly must
- ✓ Be clean
- ✓ Be fitted with gate valves
- ✓ Be located in vault per details
- ✓ Be positioned with test cocks in a vertical position if possible
- ✓ Have no galvanized fittings attached directly into/onto the device
- ✓ Have test cocks fitted with brass, stainless or plastic plugs
- ✓ Have the lowest point of the assembly a minimum of eight inches (8") from the gravel (#57 Stone or larger)
- ✓ Have top of the device between eight inches (8") and eighteen inches (18") from bottom of the cover
- ✓ Be sized to the water meter, i.e. 3" meter will require 3" backflow device
- ✓ Have attached to, or cast in the body, manufactures name, model and serial number, etc.
- ✓ Have a bronze strainer on the inlet side of the backflow device
- ✓ Be tested and pass within **five 5 working days** following installation and test report forwarded to the backflow prevention section within **ten (10) working days**.

REDUCED PRESSURE ZONE ASSEMBLY INSTALLATIONS–ALL SIZES

1) All Reduced Pressure Zone Assemblies (RPZ's) are to be installed above ground or inside the facility to protect from freezing. **(RPZ's can only be installed in the horizontal position per AWWA Manual 14)** Exposure to freezing will result in improper functioning of an RPZ and may cause permanent damage to the assembly.

2) **Southern Building Code Section 304.4 (1994)-Freezing:** A water, soil or waste pipe shall not be installed or permitted outside of a building or concealed in outside walls or any place where they may be subject to freezing temperatures, unless adequate provision is made to protect them from freezing.

3) **Reduced** Pressure Zone Assemblies that are installed inside a facility <u>are required to be installed in the horizontal position</u>, have an air gap and discharge line installed to catch water that the device will periodically discharge.

4) **Facilities** requiring an RPZ may be allowed to install it inside provided that either:
- ✓ There are no other connections between the meter and the building and it is unlikely one would be installed in the future or,
- ✓ A double check is installed at the meter.

5) All above ground enclosures for RPZ's are to be sized to the RPZ size or larger per manufacturer's specifications. E.G. A two-inch RPZ must go in an enclosure designed for a two-inch or larger RPZ.

6) The base on which an above ground enclosure sits may be a complete slab or perimeter footer. If a perimeter footer is used than clean gravel (#57 stone or larger) covering the entire bottom of the enclosure must be a full twelve inches (12") deep. See detail sheet

7) All enclosures are to be designed with drainage openings large enough to accommodate a full discharge of the assembly.

8) The reduced pressure zone backflow assembly must:

- ✓ Be clean
- ✓ Be centered in the box if installation will permit
- ✓ Be positioned with test cocks in a vertical position if possible
- ✓ Have no galvanized fittings attached directly into/onto the device
- ✓ Have test cocks fitted with brass, stainless or plastic plugs
- ✓ Be installed in the horizontal position per AWWA Manual 14
- ✓ Have the lowest point of the assembly a minimum of twelve inches (12") from the gravel (#57 stone or larger)
- ✓ Have ball valves positioned so they can be opened fully from top or side
- ✓ Be sized to the water meter, i.e. a one inch (1") meter will require a one inch (1") backflow device
- ✓ Have attached to, or cast in the body, manufactures name, model and serial number, etc.
- ✓ Have a bronze strainer on the inlet side of the backflow device
- ✓ Be tested and pass within **five (5) working days** following installation and test report forwarded to the backflow prevention section within **ten (10) working days**.

NOTICE TO ALL CUSTOMERS AND INSTALLERS

- ❖ Ownership of the backflow assembly and responsibility for testing, maintenance and proper operation are that of the water consumer.

- ❖ The City of Augusta, Georgia neither accepts responsibility or liability for the backflow assembly being tested, maintained or operating properly.

- ❖ Backflow assemblies are to be installed either by a Licensed Plumber, Licensed Fire Protection System Installer, Mechanical and/or Utility Contractor or the property owner. All repairs are to be made by a licensed Master Plumber or someone certified by the State of Georgia in backflow device repair.

- ❖ Installation of a Backflow Prevention assembly on a service line creates a closed system. Provisions should be made for thermal expansion in the customer's system. (Georgia State Plumbing Code Section 1112.8) **Thermal Expansion devices will be installed and a notation of thermal device location is to be made on test sheet.**

If you need more information, please contact the City of Augusta, Georgia's Utilities Department Backflow Prevention Section at (706) 312-4145.

DOUBLE CHECK ASSEMBLY INSTALLATION

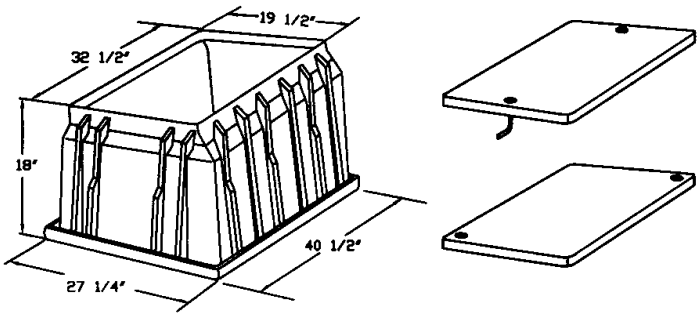

CARSON IND. SERIES 1730D BOX W/COVER
(OR EQUIVALENT)
USED FOR ALL ASSEMBLIES 2" AND SMALLER

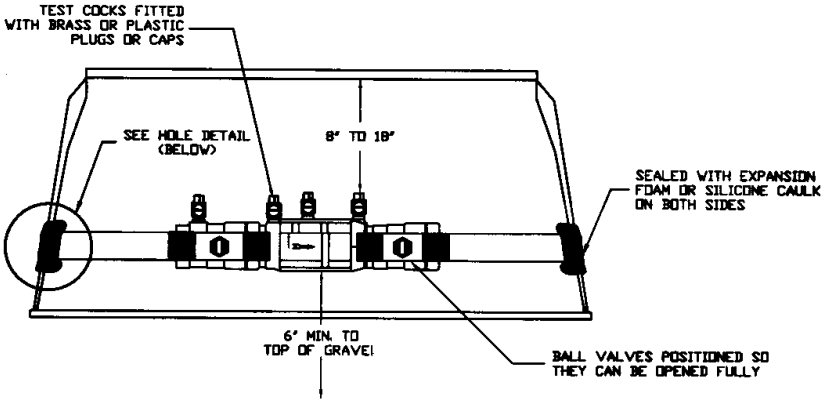

DOUBLECHECK ASSEMBLY DETAIL

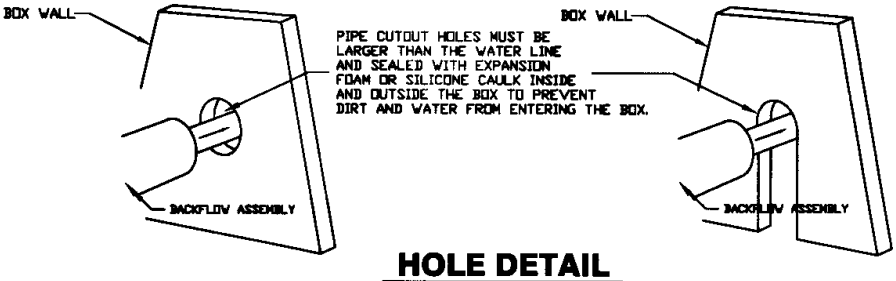

HOLE DETAIL
INSIDE VIEW

FOUNDATION VARIATIONS

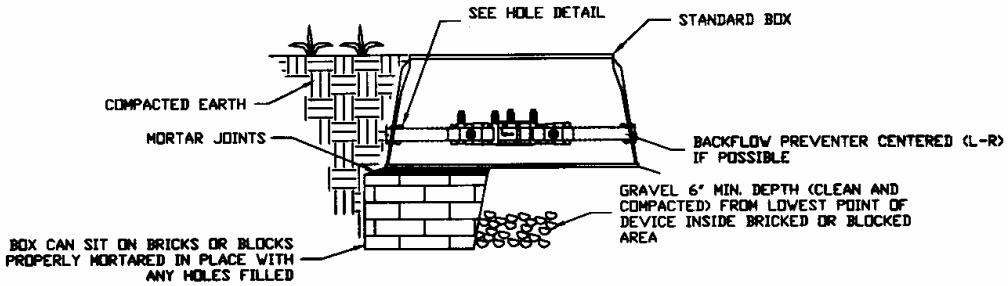

INSTALLATION #1

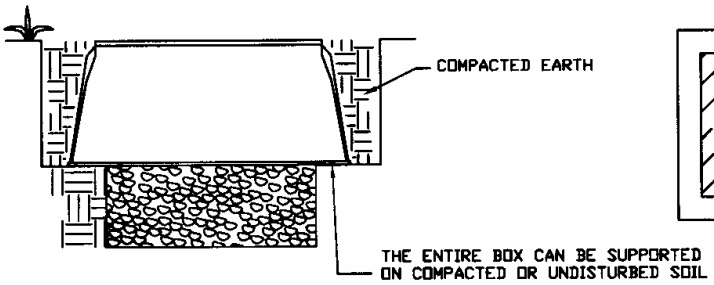

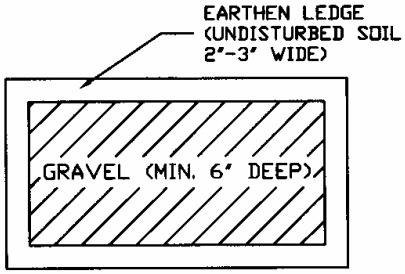

LEDGE DETAIL
TOP VIEW

INSTALLATION #2

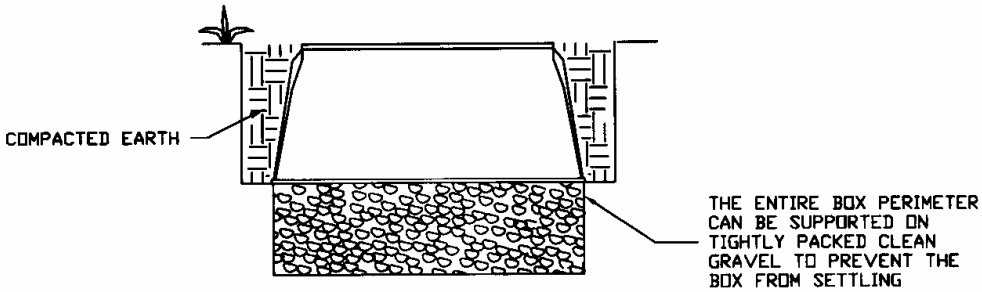

***NOTE: OTHER TYPES OF INSTALLATION MAY BE NECESSARY DUE TO VARYING FIELD CONDITIONS. CONSULT WITH INSPECTOR BEFORE INSTALLING.**

INSTALLATION #3

ASSEMBLY VARIATIONS

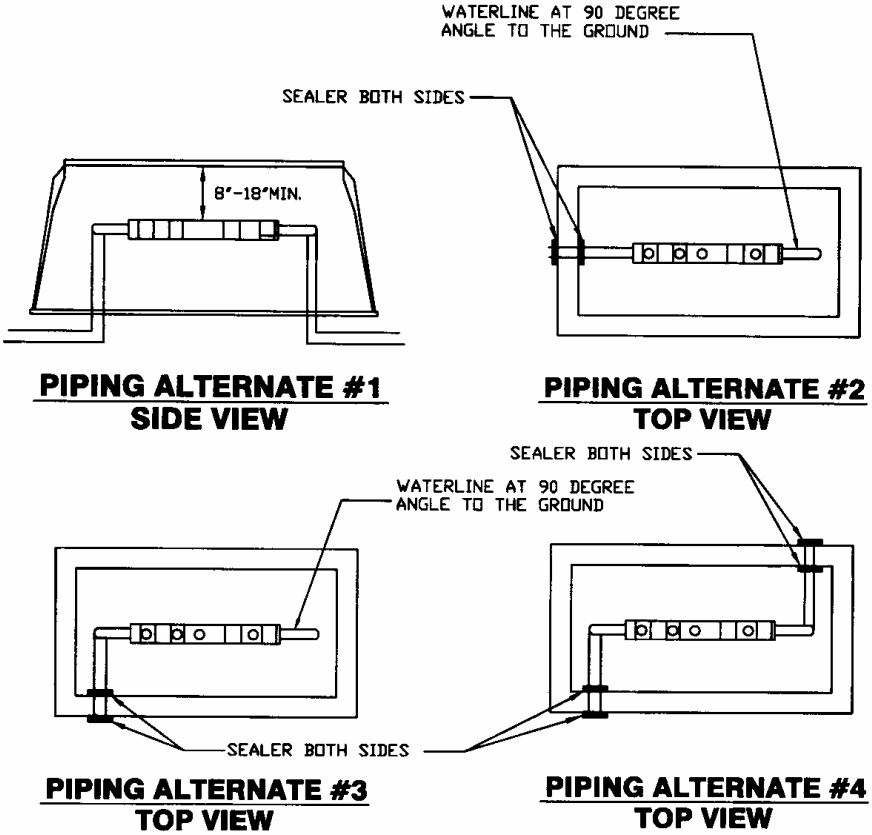

NOTES:

* ASSEMBLIES SHOULD BE CENTERED IN THE BOX TO ALLOW ACCESS FOR TESTING AND REPAIR.
* BOX MUST NOT REST ON THE WATERLINE.
* ENTRY AND EXIT POINTS OF THE WATER LINE MUST BE SEALED ON BOTH SIDES TO PREVENT ENTRY OF WATER AND DIRT. SEE DOUBLE CHECK ASSEMBLY AND HOLE DETAIL.
* MINIMUM CLEARANCES TO BE MAINTAINED;
  - 8"-18"TOP OF ASSEMBLY TO TOP OF BOX
  - 6" FROM BOTTOM OF DEVICE TO TOP OF GRAVEL
* A SMALLER BOX MAY BE USED, WITH PRIOR APPROVAL OF THE INSPECTOR, IF SPACE RESTRICTIONS WILL NOT ALLOW INSTALLATION OF THE 1730D OR ITS EQUIVALENT.

REDUCED PRESSURE ZONE ASSEMBLY INSTALLATION

ENCLOSURE: HOT BOX, OR EQUIVALENT BOX, SIZED TO ASSEMBLY SIZE 3/4" TO 2".

TWO PIECE BOX

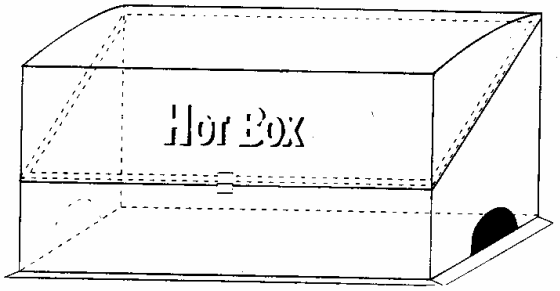

NOTE: BOX SHOULD BE HEATED OR INSULATED TO PROTECT FROM FREEZING

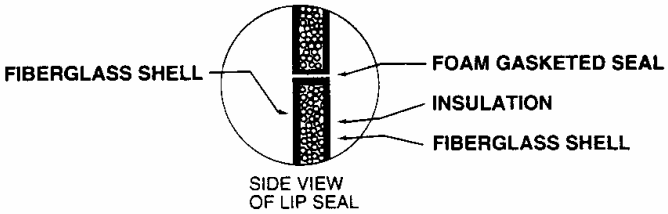

STANDARD COLORS:
-WHITE
-BEIGE

PHYSICAL PROPERTIES

MODEL No.	I.P.S.	INSIDE DEPTH	INSIDE WIDTH	INSIDE HEIGHT	INSULATION "R" VALVE	DRAINAGE CAPACITY
.75	3/4" - 1"	11"	19"	22"	8.0	180 GPM
1	3/4" - 1"	13"	27"	23"	8.0	180 GPM
1.5	3/4" - 11/2"	21"	33"	23"	8.0	575 GPM
2	1 1/4" - 2"	13"	39"	35"	8.0	575 GPM

FEATURES

Fiberglass construction, drainage capacity (RPZ devices), engineered heater sizing (protection for -30°F), testing/ maintenance access, ground anchor capabilities and lockable lid.

REDUCED PRESSURE ZONE ASSEMBLY INSTALLATION

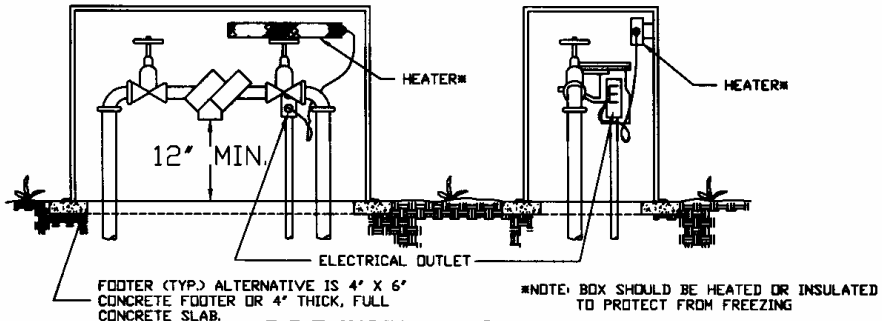

R.P.Z. INSTALLATION DETAIL

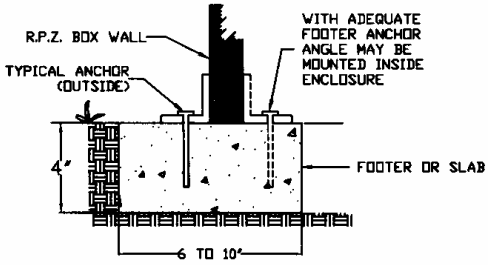

FOOTER OR CONCRETE SLAB (R.P.Z. BOX)

NOTE: IF A PERIMETER FOOTER IS USED THEN THERE MUST BE GRAVEL COVERING THE ENTIRE BOTTOM OF THE ENCLOSURE A FULL TWELVE INCHES DEEP.

REDUCED PRESSURE BACKFLOW PREVENTER
¾" through 2"

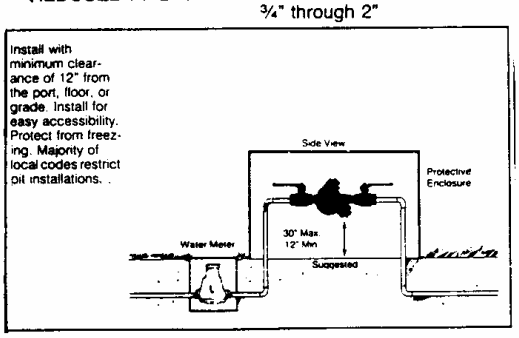

REDUCED PRESSURE BACKFLOW PREVENTER
2½" through 10"

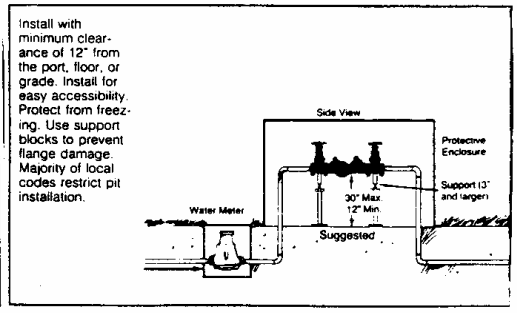

DRAIN DETAIL FOR RPZ BOX ENCLOSURE OR EQUIVALENT

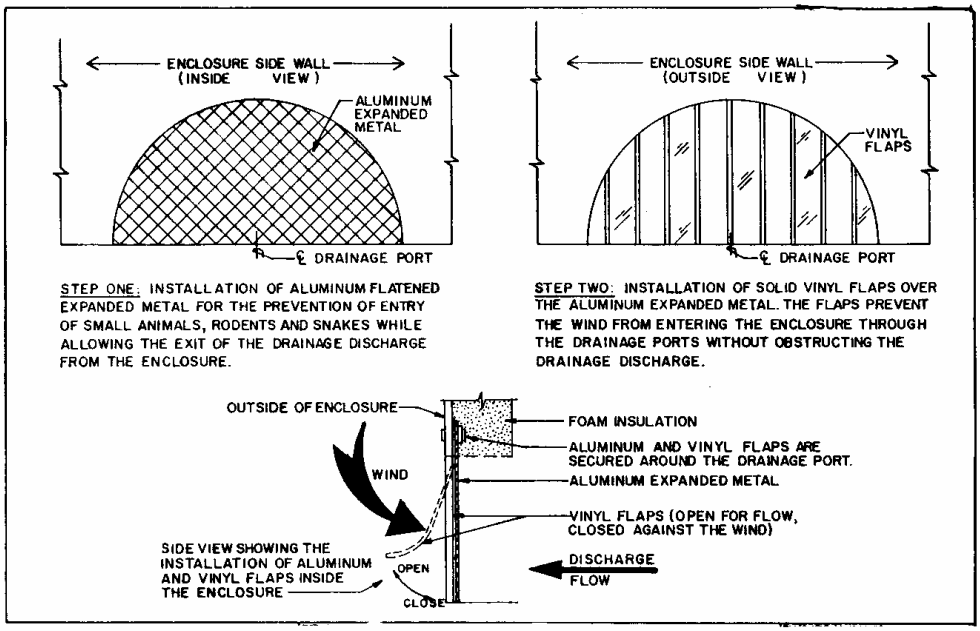

Note:

- All Reduced Pressure Zone Assemblies (RPZ's) are to be installed above ground or inside the facility to protect from freezing. Exposure to freezing will result in improper functioning of an RPZ and may cause un-repairable damage to the assembly.
- **Southern Building Code Section 304.4 - Freezing (1994):** A water, soil or waste pipe shall not be installed or permitted outside of a building or concealed in outside walls or any place where they may be subject to freezing temperatures, unless adequate provision is made to protect them from freezing.
- Facilities requiring an RPZ may be allowed to install it inside provided that either: there are no other connections between the meter and the building **and** it is unlikely one would be installed in the future, **or** a double check is installed at the meter.
- All above ground enclosures for RPZ's are to be sized to the RPZ size or larger per manufacturer's specifications. E.g. A two-inch RPZ must go in an enclosure designed for a two-inch or larger RPZ.
- If a perimeter footer is used then clean gravel covering the entire bottom of the enclosure must be a full twelve inches (12") deep.
- All enclosures are to be designed with drain openings large enough to accommodate a full discharge of the assembly.

2 1/2" AND LARGER DOUBLE CHECK ASSEMBLY

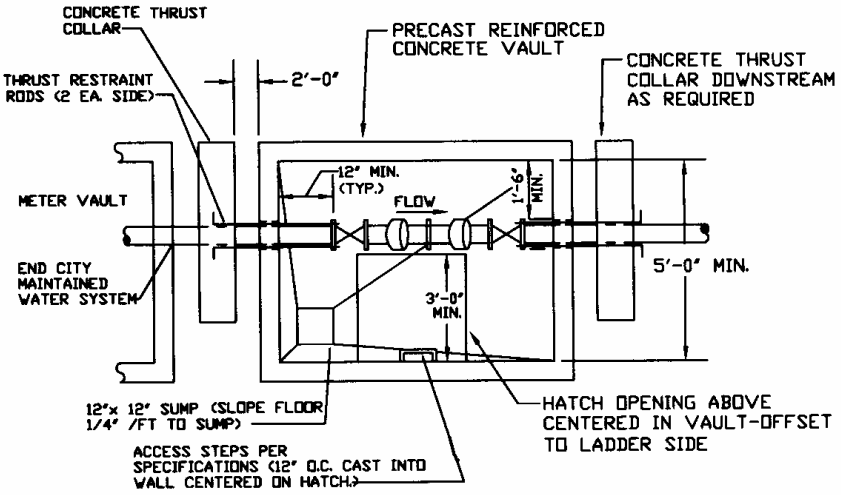

TYPICAL BACKFLOW PREVENTER VAULT DETAIL

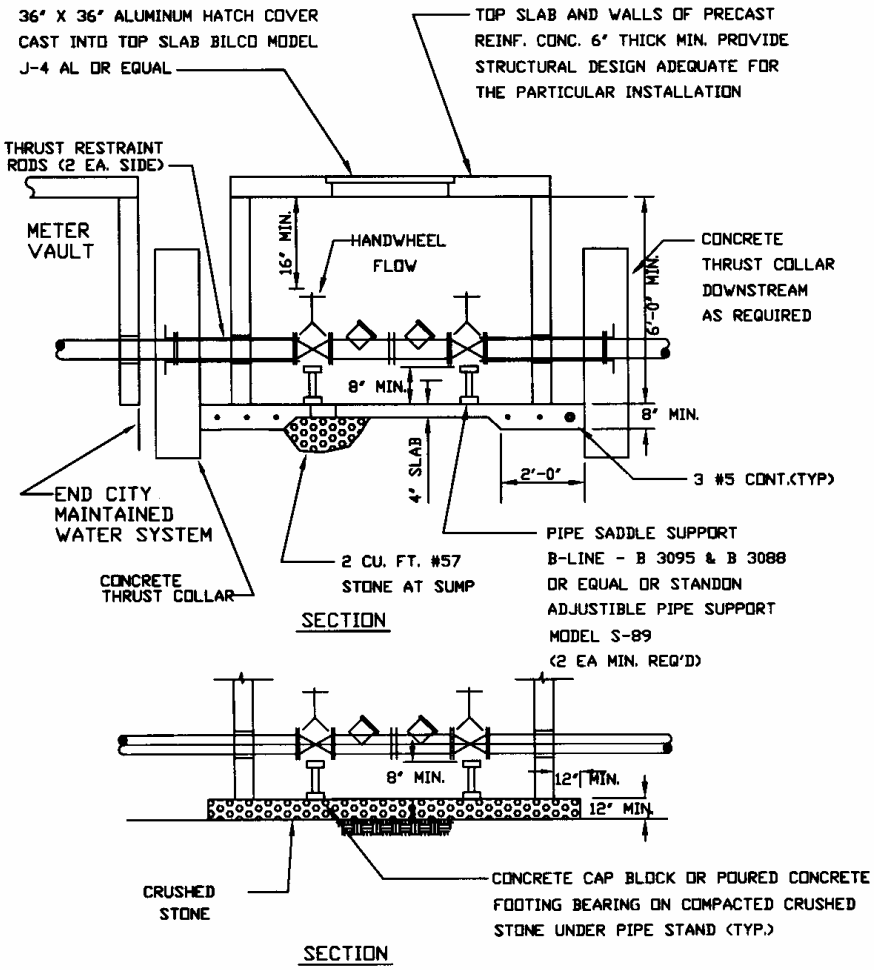

ALTERNATE VAULT BOTTOM DETAIL

NOTES:
1. DESIGN SHOWN IS FOR NON-TRAFFIC AREAS PROVIDE STRUCTURAL DESIGN ADEQUATE FOR PARTICULAR INSTALLATION.
2. SUBGRADE UNDER STRUCTURE AND BACKFILL AROUND STRUCTURE AND THRUST COLLARS SHALL BE COMPACTED TO 95% MAX. DRY DENSITY.

2 1/2" AND LARGER TYPICAL FIRE VAULT

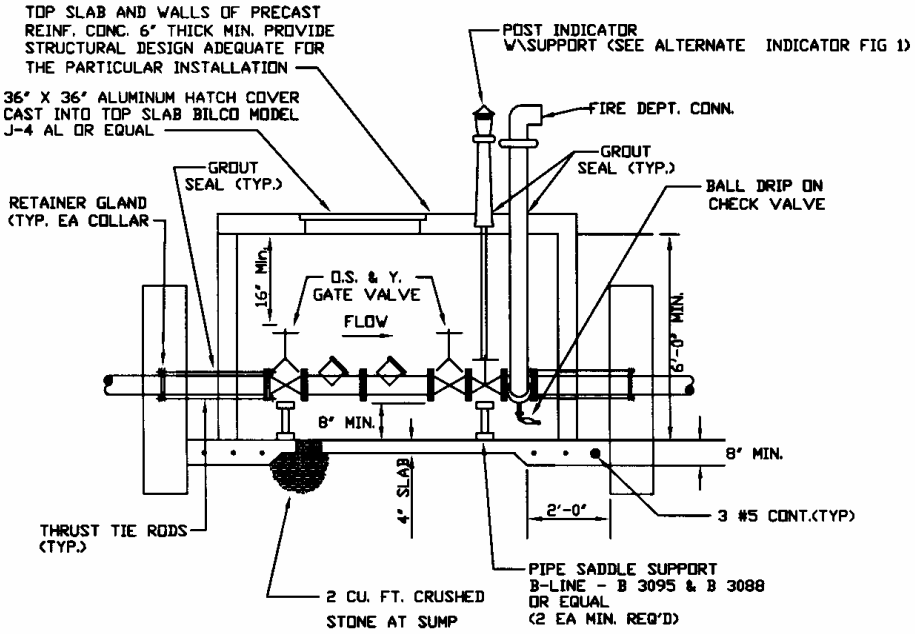

SECTION
N.T.S.

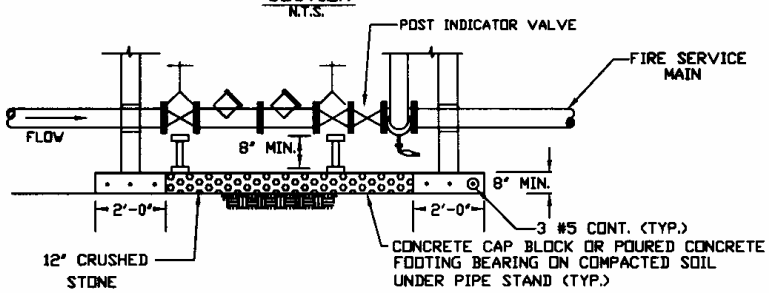

SECTION

ALTERNATE VAULT BOTTOM DETAIL

N.T.S.

NOTES:
1. DESIGN SHOWN IS FOR NON-TRAFFIC AREAS PROVIDE STRUCTURAL DESIGN ADEQUATE FOR PARTICULAR INSTALLATION.
2. SUBGRADE UNDER STRUCTURE AND BACKFILL AROUND STRUCTURE AND THRUST COLLARS SHALL BE COMPACTED TO 95% MAX. DRY DENSITY.
3. POST INDICATOR VALVE CAN BE ELIMINATED IF SUPPLIER PROVIDES AN ACCEPTABLE METHOD FOR ATTACHING POST INDICATOR ASSEMBLY TO DOWNSTREAM O.S. & Y GATE VALVE.

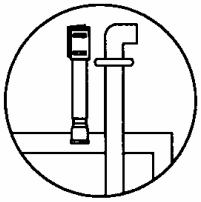

ALTERNATE INDICATOR FIG. 1

\

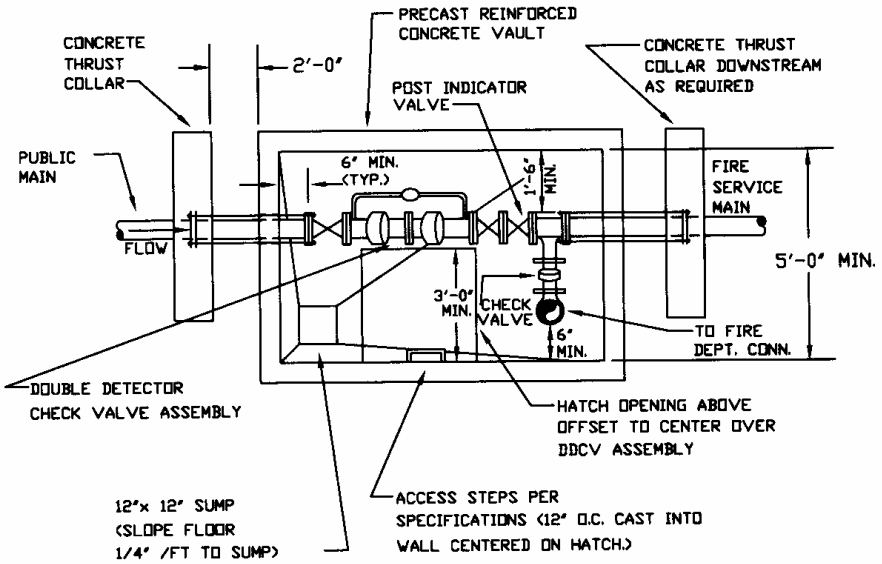

TYPICAL FIRE SERVICE VAULT DETAIL

N.T.S

Augusta Utilities
Backflow Prevention Section
360 Bay Street Suite 180
Augusta, Ga. 30901

Phone: (706) 312-4145
Fax: (706) 312-4148

BACKFLOW PREVENTION ASSEMBLY TEST/REPAIR REPORT FORM

Time: _____ Inspector's Name:_____ Date: _____

Customer: _____

Address: _____

Location of Assembly: street address_____

Type of Assembly:_____ Manufacturer:_____ Model:_____ Size_____ Serial#_____

Device Location:_____ Line Pressure at time of Test : _____

	Check No. 1	Check No. 2	Differential Pressure Relief Valve	#1 gate or ball (circle one)	#2 gate or ball (circle one)	PVB/SVB
Test Before Repairs	_____Leaked _____Closed Tight DROP ACROSS PSID	_____Leaked _____Closed Tight DROP ACROSS PSID	Opened at _____lbs. Differential Pressure	_____Leaked _____closed tight	_____Leaked _____Closed Tight	Air Inlet Opened @ _____PSID _____did not open Check Valve Held @ ____PSID
Repairs And New Materials						_____Cleaned _____Replaced
Test After Repairs	_____Leaked _____Closed Tight	_____Leaked _____Closed Tight	Opened at _____lbs. Differential Pressure	Gate or Ball (circle one)	Gate or Ball (circle one)	Air Inlet Opened @ _____PSID _____did not open Check Valve Held @_____PSID
	Drop Across PSID	Drop Across PSID		____Leaked ____Closed Tight (mark One)	____Leaked ____Closed Tight (mark One)	

ABOVE DATA CERTIFED TO BE CORRECT

Backflow Device: _____PASSED _____FAILED Certification # Ga._____

Tester's Signature _____ DATE _____

Thermal Expansion Device Installed Yes No (circle one) Location of Thermal Expansion Device _____

Method of Testing _____ TEST KIT USED _____

Comments:_____
_____

APPENDIX DD

DEMARCATION MATRIX

Natural Gas

Point of Demarcation	Applicable Scenario	Sketch
The point of demarcation is the down stream side of the natural gas meter.	Natural gas service to the building is metered.	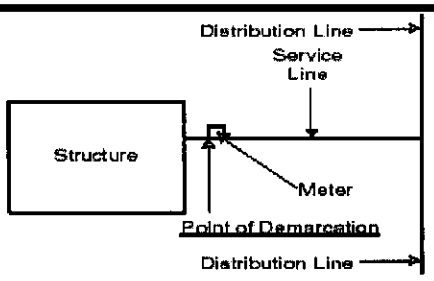
The point of demarcation is the down stream side of the pressure regulator.	Natural gas service to the building is regulated but not metered.	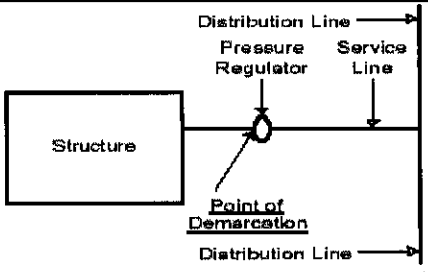
Point of demarcation is the down stream side of the closest apparatus to the exterior of the faciltiy	More than one apparatus is connected to the service line feeding the facility.	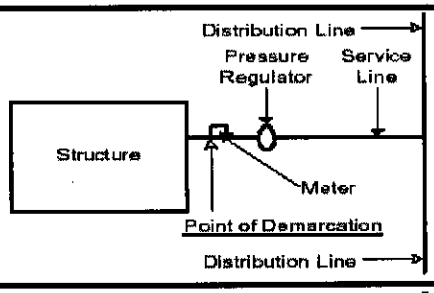
Point of demarcation is where the piping penetrates the building envelope.	No meter or regulator exists at the facility.	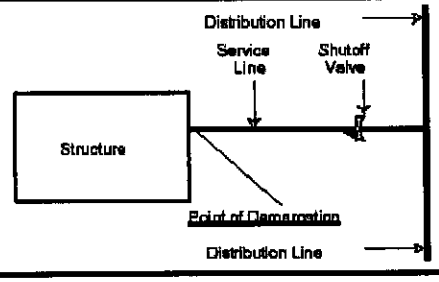

Electrical

Point of Demarcation	Applicable Scenario	Sketch
Point of demarcation is the first point of disconnect at or in the facility.	Pad Mounted Transformer located outside of structure with underground service to the structure and no meter exists.	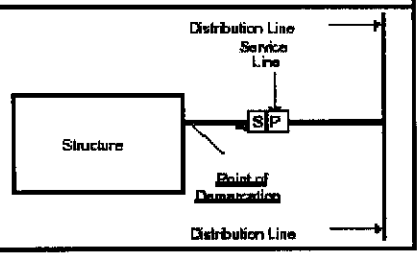

Point of Demarcation	Applicable Scenario	Sketch
Down current side of the meter	Residential service (less than 200 amps and 240V 1-Phase), and three phase selfcontained meter installations. Electric Meter exists within five feet of the exterior of the building on an underground secondary line.	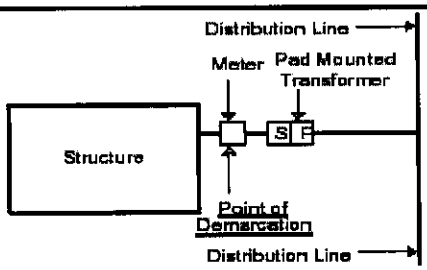
Point of demarcation is the first point of disconnect at or in the facility.	Three Phase CT metered service.	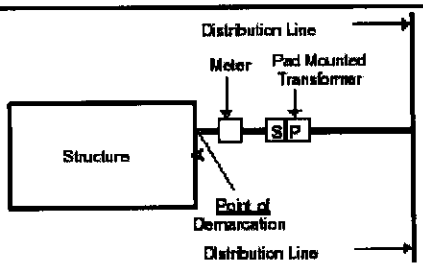
Secondary terminal of the transformer inside of the structure	Transformer located inside of structure and an isolation device is in place with or without a meter Note: Utility Owner must be granted 24-hour access to transformer room.	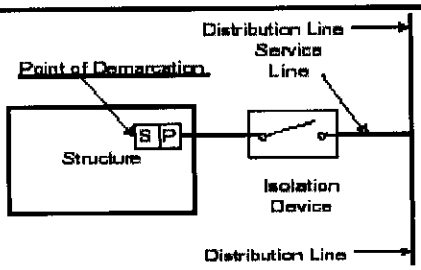
Secondary terminal of the transformer inside of the structure	Transformer located inside of structure with no isolation device in place. Note: Utility Owner must be granted 24-hour access to transformer room.	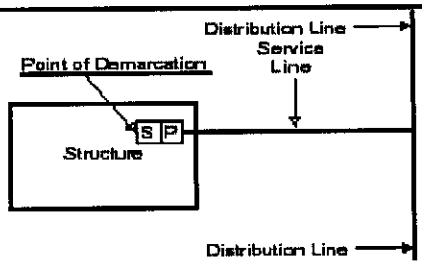

Water Distribution

Water Distribution System – Fort Gordon

Point of Demarcation	Applicable Scenario	Sketch
The point of demarcation is the customer side of the meter.	Structures with a service meter.	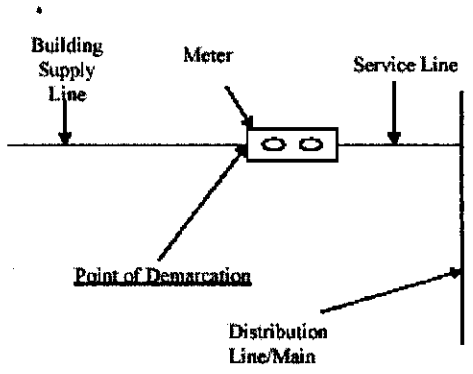
The point of demarcation is 5 feet away from the exterior of the structure.	Structures without meters.	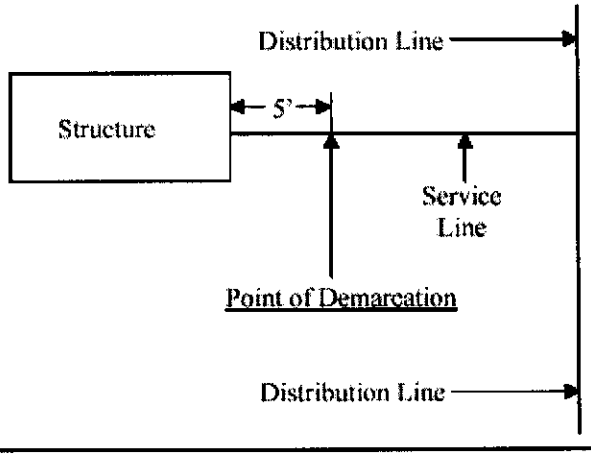

Point of Demarcation	Applicable Scenario	Sketch
The point of demarcation is on the structure side of the post indicator valve.	Structures with fire suppression lines supplied by the water distribution system.	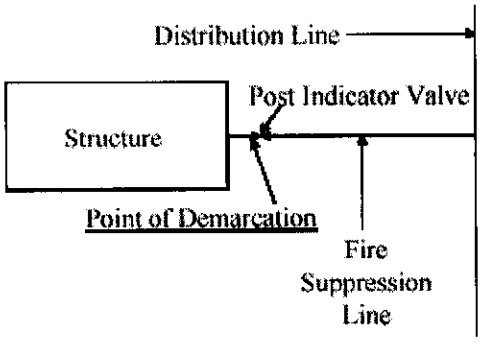

Wastewater

Wastewater System – Fort Gordon

Point of Demarcation	Applicable Scenario	Sketch
The point of demarcation is 5 feet away from the exterior of the structure or to a point beyond the cleanout whichever is closer to the building.	All scenarios.	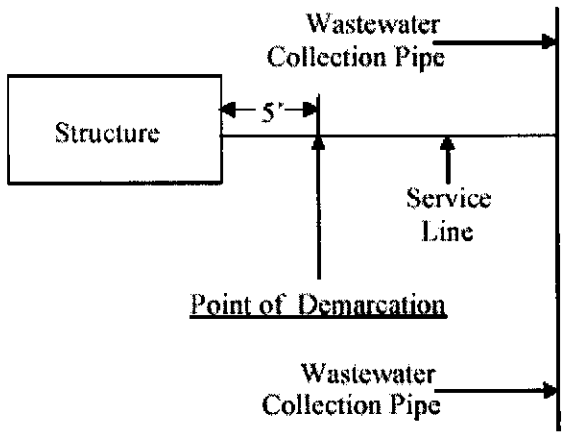
The point of demarcation is where the effluent pipe exits the oil/water separator.	All scenarios where an oil/water separator discharges to the wastewater system.	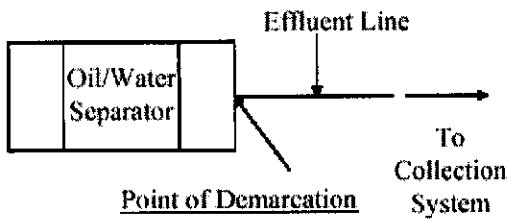

APPENDIX EE

COLOR CHART EXTRACT FROM INSTALLATION DESIGN GUIDE

EXTERIOR COLOR CHART

VISUAL ZONE: North Industrial

Bldg. Design Element		Required Color Standard	Color Sample	Notes
Walls	Base (primary) material	CMU, Sand		
	Secondary Material	Pre-finished metal panels, Surrey Brown		1
		Pre-cast concrete sills and trim Light Sand		2
Roof	Sloped areas	Standing seam metal, AMS Terra Cotta		3,4
	"Flat" areas	Light colored reflective membrane, White		
Fenestration	Doors	Aluminum storefront at entries, Dark Bronze or Clear		5
		Steel insulated core, Dark Bronze		5
	Overhead Doors	Steel insulated core; pre-finished, Dark Sand		
	Door & Window Frames	Aluminum or steel and glass, Alum: Dark Bronze or Clear Steel: Dark Bronze		5
	Storm window or sash	Aluminum or steel and glass, Alum: Dark Bronze or Clear Steel: Dark Bronze		5
	Window	1" insulated tinted exterior, Light Bronze		
Trim Items	Fascia	Metal, factory pre-finished, Match sloped metal roof – RMS Terra Cotta		3,4
	Soffit	Metal, factory pre-finished, Match sloped metal roof – RMS Terra Cotta		3,4

	Gutters and D.S.	Metal, factory pre-finished, Match sloped metal roof – RMS Terra Cotta		3,4
	Awnings, Shelters and canopies	Metal, factory pre-finished, Match sloped metal roof – RMS Terra Cotta		3,4
	Stair or balcony railings, balusters and related trim/accessories	Galvanized steel with factory finish, Dark Bronze		5
	Handrails	Galvanized steel with factory finish, Dark Bronze		5
	Fire escapes	Galvanized steel with factory finish, Dark Bronze		5
	Grilles and louvers	Painted galvanized metal, Color match adjacent wall material		
	Coping	Painted galvanized metal, match roof color		3,4
	Roof ventilators	Galvanized metal, painted to match roof color, Unpainted galvanized at flat roofs		3,4
Related Side Structures	Courtyard enclosure walls, retaining walls, fences, dumpster enclosures	CMU: Sand		
	Porch crawl space enclosure	CMU or pre-finished metal panel, CMU: Sand, Metal Panel: Surrey Brown		

NOTES: North industrial	
Note 1	Surrey Brown color to match vertical siding at Building 13700
Note 2	Light Sand color to match trim at Building 19733
Note 3	Terra Cotta color to match metal roof system at Building 21715
Note 4	Major Construction with HQ and substantial admin to have “Colonial Red” color metal roof system in this Zone.
Note 5	Dark Bronze color to match door and window frames at Building 33720

EXTERIOR COLOR CHART

VISUAL ZONE: Signal Center Barracks and Administration

Bldg. Design Element		Required Color Standard	Color Sample	Notes
Walls	Base (primary) material	Brick: 2.0 GreyStone		1
	Secondary Material	Ext. Insulation Finish System (EIFS): Beige		2
		Pre-cast concrete sills and trim, Light Sand	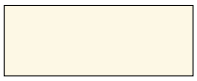	3
Roof	Sloped areas	Standing seam metal, AMS Terra Cotta		4
	"Flat" areas	Light colored reflective membrane, White		
Fenestration	Doors	Aluminum storefront at entries, Dark Bronze or Clear		5
		Steel insulated core, Dark Bronze		5
	Overhead Doors	Steel insulated core; pre-finished, Dark Sand		
	Door & Window Frames	Aluminum or steel and glass, Alum: Dark Bronze or Clear Steel: Dark Bronze		5
	Storm window or sash	Aluminum or steel and glass, Alum: Dark Bronze or Clear Steel: Dark Bronze		5
	Window	1" insulated tinted exterior, Light Bronze		
Trim Items	Fascia	Metal, factory pre-finished, Match sloped metal roof – RMS Terra Cotta		4

	Soffit	Metal, factory pre-finished, Match sloped metal roof – RMS Terra Cotta		4
	Gutters and D.S.	Metal, factory pre-finished, Match sloped metal roof – RMS Terra Cotta		4
	Awnings, Shelters, and canopies	Metal, factory pre-finished, Match sloped metal roof – RMS Terra Cotta	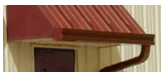	4
	Stair or balcony railings, balusters and related trim/accessories	Galvanized steel with factory finish, Light Sand		3
	Handrails	Galvanized steel with factory finish, Dark Bronze		5
	Fire escapes	Galvanized steel with factory finish, Dark Bronze		5
	Grilles and louvers	Painted galvanized metal, Color match adjacent wall material		
	Coping	Painted galvanized metal, match roof color		4
	Roof ventilators	Galvanized metal, painted to match roof color, Unpainted galvanized at flat roofs		4
Related Side Structures	Courtyard enclosure walls, retaining walls, fences, dumpster enclosures	Brick: 2.0 GreyStone, or CMU: Dark Sand		1
	Porch crawl space enclosure	Brick: 2.0 GreyStone		1

NOTES:	Signal Center Barracks and Administration
Note 1	Brick color to match Building 33720 “Darling Hall”
Note 2	Beige color to match EIFS at Building 19733
Note 3	Light Sand color to match trim at Building 19733
Note 4	Terra Cotta color to match metal roof system at Building 21715
Note 5	Dark Bronze color to match door and window frames at Building 33720

EXTERIOR COLOR CHART

VISUAL ZONE: USAR / National Guard

Bldg. Design Element		Required Color Standard	Color Sample	Notes
Walls	Base (primary) material	Brick: 2.0 GreyStone		1
	Secondary Material	Ext. Insulation Finish System (EIFS): Beige		2
		Pre-cast concrete sills and trim Light Sand		3
Roof	Sloped areas	Standing seam metal, Dark Bronze		4
	"Flat" areas	Light colored reflective membrane, White		
Fenestration	Doors	Aluminum storefront at entries, Dark Bronze or Clear		4
		Steel insulated core, Dark Bronze		4
	Overhead Doors	Steel insulated core; pre-finished, Dark Sand		
	Door & Window Frames	Aluminum or steel and glass, Alum: Dark Bronze or Clear Steel: Dark Bronze		4
	Storm window or sash	Aluminum or steel and glass, Alum: Dark Bronze or Clear Steel: Dark Bronze		4
	Window	1" insulated tinted exterior, Light Bronze		
Trim Items	Fascia	Metal, factory pre-finished, Match sloped metal roof – Dark Bronze		4
	Soffit	Metal, factory pre-finished, Match sloped metal roof – Dark Bronze		4

	Gutters and D.S.	Metal, factory pre-finished, Match sloped metal roof – Dark Bronze		4
	Awnings, Shelters, and canopies	Metal, factory pre-finished, Match sloped metal roof – Dark Bronze		4
	Stair or balcony railings, balusters and related trim/accessories	Galvanized steel with factory finish, Dark Bronze		4
	Handrails	Galvanized steel with factory finish, Dark Bronze		4
	Fire escapes	Galvanized steel with factory finish, Dark Bronze		4
	Grilles and louvers	Painted galvanized metal, Color match adjacent wall material		
	Coping	Painted galvanized metal, match roof color		4
	Roof ventilators	Galvanized metal, painted to match roof color, Unpainted galvanized at flat roofs		4
Related Side Structures	Courtyard enclosure walls, retaining walls, fences, dumpster enclosures	Brick: 2.0 Grey Stone, or CMU: Dark Sand		
	Porch crawl space enclosure	Brick: 2.0 GreyStone		1

NOTES: USAR / National Guard	
Note 1	Brick color to match Building 33720 “Darling Hall”
Note 2	Beige color to match EIFS at Building 19733
Note 3	Light Sand color to match trim at Building 19733
Note 4	Dark Bronze color to match metal roof system at Building 14401
Note 5	Dark Bronze color to match door and window frames at Building 14401

EXTERIOR COLOR CHART

VISUAL ZONE: South Industrial

Bldg. Design Element		Required Color Standard	Color Sample	Notes
Walls	Base (primary) material	Brick, Olde Red Blend		1
	Secondary Material	Pre-finished metal panels, Light Tan		2
		Pre-cast concrete sills and trim, Light Tan		2
Roof	Sloped areas	Standing seam metal roof, Light Tan		3
	"Flat" areas	Light colored reflective membrane, White		
Fenestration	Doors	Aluminum storefront at entries, Dark Bronze or Clear		4
		Steel insulated core, Dark Bronze		4
	Overhead Doors	Steel insulated core; pre-finished, Medium Sand		
	Door & Window Frames	Aluminum or steel and glass, Alum: Dark Bronze or Clear Steel: Dark Bronze		4
	Storm window or sash	Aluminum or steel and glass, Alum: Dark Bronze or Clear Steel: Dark Bronze		4
	Window	1" insulated tinted exterior, Light Bronze		
Trim Items	Fascia	Metal, factory pre-finished, Match sloped metal roof – Light Tan		3
	Soffit	Metal, factory pre-finished, Match sloped metal roof – Light Tan		3

	Gutters and D.S.	Metal, factory pre-finished, Dark Bronze		4
	Awnings, Shelters and canopies	Metal, factory pre-finished, Match sloped metal roof – Light Tan		3
	Stair or balcony railings, balusters and related trim/accessories	Galvanized steel with factory finish, Dark Bronze		4
	Handrails	Galvanized steel with factory finish, Dark Bronze		4
	Fire escapes	Galvanized steel with factory finish, Dark Bronze		4
	Grilles and louvers	Painted galvanized metal, Color match adjacent wall material		
	Coping	Painted galvanized metal, match roof color		3
	Roof ventilators	Galvanized metal, painted to match roof color, Unpainted galvanized at flat roofs		3
Related Side Structures	Courtyard enclosure walls, retaining walls, fences, dumpster enclosures	CMU: Dark Sand		
	Porch crawl space enclosure	CMU or pre-finished metal panel, CMU: Dark Sand, Metal Panel: Insignia White		

NOTES: South Industrial	
Note 1	Brick color to match 35th Signal BDE maintenance Facility
Note 2	Pre-finished metal panel color to match 35th Signal BDE maintenance Facility
Note 3	Light Tan color to match metal roof system at 35th Signal BDE maintenance Facility
Note 4	Dark Bronze color to match door and window frames at 35th Signal BDE maintenance Facility
Note 5	Medium Sand color to match overhead door at 35th Signal BDE maintenance Facility

EXTERIOR COLOR CHART

VISUAL ZONE: Community Center

Bldg. Design Element		Required Color Standard	Color Sample	Notes
Walls	Base (primary) material	Brick: Southern Red		1
	Secondary Material	CMU: Light Sand or (EIFS): Antique White		
		Pre-cast concrete sills and trim, Antique White		
Roof	Sloped areas	Standing seam metal, Deep Green		4
	"Flat" areas	Light colored reflective membrane, White		
Fenestration	Doors	Aluminum storefront at entries, Dark Bronze or Clear		5
		Steel insulated core, Dark Bronze		5
	Overhead Doors	Steel insulated core; pre-finished, Dark Sand		
	Door & Window Frames	Aluminum or steel and glass, Alum: Dark Bronze or Clear Steel: Dark Bronze		5
	Storm window or sash	Aluminum or steel and glass, Alum: Dark Bronze or Clear Steel: Dark Bronze		5
	Window	1" insulated tinted exterior, Light Bronze		
Trim Items	Fascia	Metal, factory pre-finished, Match sloped metal roof – Deep Green		4

	Soffit	Metal, factory pre-finished, Match sloped metal roof – Deep Green		4
	Gutters and D.S.	Metal, factory pre-finished, Antique White or Deep Green depending on Building Function.		6
	Awnings, Shelters, and canopies	Metal, factory pre-finished, An Deep Green		4
	Stair or balcony railings, balusters and related trim/accessories	Galvanized steel with factory finish, Dark Bronze		5
	Handrails	Galvanized steel with factory finish, Dark Bronze		5
	Fire escapes	Galvanized steel with factory finish, Dark Bronze		5
	Grilles and louvers	Painted galvanized metal, Color match adjacent wall material		
	Coping	Painted galvanized metal, match roof color		4
	Roof ventilators	Galvanized metal, painted to match roof color, Unpainted galvanized at flat roofs		4
Related Side Structures	Courtyard enclosure walls, retaining walls, fences, dumpster enclosures	Brick: Southern Red, or CMU: Light Sand		1
	Porch crawl space enclosure	Brick: Southern Red		1

NOTES: Community Center	
Note 1	Brick color to match Building 43400 “Freedom Park Elementary School”
Note 2	Light Sand color to match CMU at Building 33720 “Darling Hall Entrance”
Note 3	Antique White color to match trim at Building 38200
Note 4	Deep Green color to match metal roof system at Building 43400
Note 5	Dark Bronze color to match door and window frames at Building 33720
Note 6	Proposed Chapel and Library to have Antique White Gutters and Downspouts

COLOR SAMPLE

APPENDIX FF

UMCS Specifications

SECTION 25 00 00

HEATING, VENTILATION AND AIR CONDITIONING DIRECT DIGITAL CONTROL SYSTEM
01/09

PART 1 GENERAL

The intention of this scope of work is to define a complete and operational HVAC control system using DDC control components that are 100% compatible with Ft Gordon's existing UMCS to allow the exchange of system information between the UMCS workstations and the new DDC system installed in the building without the need for "gateways" or any type of protocol converter between the building and the UMCS servers in building 14600.

The contractor shall provide HVAC controls, materials, design, programming, installation, programming, graphic displays, start-up, commissioning, and warranty services for a complete and operational system of HVAC controls using DDC technology that is 100% natively compatible with the existing post UMCS. All work shall be performed in accordance with the National Electrical Code, all Ft Gordon standards and regulations, and all Post UMCS standards including installation methods, display standards, sequences of operation, and software practices. The system shall include all hardware and software points listed in the accompanying Input/Output (I/O) list for the building. The completed scope of work shall result in a complete and operational system of DDC controls interfaced to the UMCS and programmable in building 14600.

1.1 EXPERIENCE

The contractor must have at least 2 years experience installing, programming and testing the Dorsett Technologies MicroScan 4 series (or newer) equipment and the Dorsett InfoScan system. Contractor must be factory trained by Dorsett Technologies to meet these requirements.

1.1.1 CREDENTIALS

Contractor must obtain a valid Fort Gordon issued CAC Card before performing any work on the Fort Gordon DOIM Network including the DPW-UMCS System.

1.2 REFERENCES

The publications listed below form a part of this section to the extent referenced. The publications are referred to within the text by the basic designation only.

INSTITUTE OF ELECTRICAL AND ELECTRONICS ENGINEERS (IEEE)

IEEE C62.41	(1991; R 1995) IEEE Recommended Practice on Surge Voltages in Low-Voltage AC Power Circuits

1.3 SUBMITTALS

Provide complete submittals in sufficient detail to verify that the system being furnished meets the requirements of the government and conforms to the standards in paragraph 1.0.

All submittal drawings shall be provided in an electronic format. Drawings may be submitted in PDF format for review purposes.

All HVAC controls submittals must be approved by the DPW-UMCS Department before work begins.

The submittals provided shall include:

1.3.1 MANUFACTURER'S DATA SHEET

A manufacturer's data sheet for each piece of equipment furnished. Each data sheet shall be labeled with the instrument tag used on the engineering drawings. Where multiple items are shown on a data sheet, the items being submitted shall be clearly indicated using highlighting, pointers, or another suitable method.

1.3.2 TITLE PAGE AND SYMBOLS

The Engineered drawings shall include a “Title Page” that includes a table of contents, and a “Symbols” page.

1.3.3 BUILDING SYSTEMS

An engineering drawing for each specific system in the building, where there are multiple identical systems, such as terminal units, a "typical" drawing may be furnished with a parts schedule that clearly indicates the identification of the systems that the drawing describes.

1.3.4 WIRING

The engineering drawings for each system will clearly show the point-to-point wiring required for the control system and shall distinguish between field wiring and panel wiring.

1.3.5 CONTROL PANEL

An engineering drawing for each control panel showing the panel's construction, physical dimensions, and component arrangement.

1.3.6 BILL OF MATERIALS

Each engineering drawing shall include a Bill of Materials that lists each item of equipment required to complete the system shown on the drawing.

1.3.7 SEQUENCE OF OPERATION

A written sequence of operation for each type of system being controlled. The sequences of operation shall conform to Ft Gordon's standard sequences of operation.

A manufacturer’s data sheet for each piece of equipment furnished. Each data sheet shall be labeled with the instrument tag used on the engineering drawings. Where multiple items are shown a data sheet the items being submitted shall be clearly indicated using highlighting, pointers, or another method.

An engineering drawing for each specific system in the building, where there are multiple identical systems, such as terminal units, a “typical” drawing may be furnished with a parts schedule that clearly indicates the identification of the systems that the drawing describes.

The engineering drawings for each system will clearly show the point-to-point wiring required for the control system and shall distinguish between field wiring and panel wiring.

An engineering drawing for each control panel showing the panel’s construction, physical dimensions, and component arrangement.

Each engineering drawing shall include a Bill of Materials that lists each item of equipment required to complete the system shown on the drawing.

A written sequence of operation for each type of system being controlled. The sequences of operation shall conform to Ft Gordon’s standard sequences of operation.

PART 2 EXECUTION

2.1 SOFTWARE

All software required to meet the required sequences of operation including all additions to the database and all graphical displays. All graphical backgrounds shall be created in electronic “Visio 2003” format and furnished to the government as part of the project close out documentation. All floor plans will be arranged in a hierarchy allowing the operator to “drill down” from the general to the specific. All floor plans shall be created using the standards utilized by the Post UMCS group in their daily work. The following graphical displays will be furnished:

A master floor plan for each floor of the building. If the entire floor plan can not be put on one display at a screen resolution of 1152x864 and remain legible, a “master” plan for each floor shall be created with links to each section of the floor plan. All room temperatures shall be displayed on the floor plans with links to the HVAC equipment servicing that area of the building.

A graphical display for each type of system, AHU, low temperature water, chilled water, terminal unit, etc. Systems may be combined on a display if the combination does not exceed the 1152x864 screen resolution or result in so many dynamic points being placed on the display that the display becomes difficult to use as determined by the Owner.

As long as they are typical, systems such as terminal units may be combined on a single display as long as they are all common to an AHU.

A display of the control logic for each “major” system; control logic for terminal units is not required to be displayed. The display shall consist of a logical block diagram with all of the inputs and outputs of the control logic shown on the display by a dynamic point linked to the actual I/O.

A written sequence of operation display for each control function.

3.0 HARDWARE

The contractor shall provide all hardware listed in the project I/O list. All hardware shall be new meeting the following specifications:

All temperature sensors shall be 2-wire 1000 Ohm platinum RTD's, "385" curve.

3.2.1 Air Handler Temperature Sensors

Averaging type sensors shall be used for all Mixed Air applications and all Supply Air sensors when the supply duct has a cross sectional area greater than 6sqFt. The length of the element shall be selected to provide adequate coverage of the duct area for the control loop.

Return Air sensors may be single point type.

3.2.2 Outside Air Sensors

Outside Air sensors shall be mounted in instrument shelters. Contractor shall use existing instrument shelters or provide a new shelter if an existing instrument shelter is not available. New instrument shelters shall be a minimum of two (2) cubic feet in volume, wood with louvered sides, equipped with a double roof, coated with heat reflective paint and mounted a minimum of 4 foot from the north wall of the building. Instrument shelters shall be at least four feet off the ground in a grassy area that minimizes all artificial heat loads.

3.2.3 Room Sensors

Room sensors shall be Dorsett Technologies. model 401-A-600-3 or equal, comprised of a surface mounted sensor with a thermoplastic enclosure that matches the existing temperature sensors used on the post.

A 10 conductor 18 AWG twisted pair shielded plenum rated multiconductor cable shall be pulled to all room sensors connected to a VAV Box Controller. All room sensors shall be equipped with the capabilities of a set point adjustment. Set point adjustment shall be provided only if the zone consists of a single room private office.

A four conductor 22 or 24 AWG 120ohm cable (as specified in Attachment A) shall be pulled to each room sensor if EIA/TIA-485 communications to room sensor is required. Example would be room temperature sensors used in VAV box control application.

Control Thermostat shall be Dorsett MS4-CS-600 series or equal. These can be used with Fan Coil Units or Heat Pump control applications.

3.2.4 Immersion Sensors

Immersion sensors shall be provided with a stainless steel separable well, filled with thermal conducting compound, sensors used above 80 degrees may use a spring loaded sensor for conductivity.

3.2.5 Humidity Sensors

Humidity sensors (duct or Wall Mount) shall be 2-wire, 4/20mA, 2-10VDC or 0-10VDC outputs, with 3% accuracy.

A Humidity sensor must be provided per 3.2.2 requirements.

3.3 DAMPER ACTUATORS

Damper Actuators shall be furnished for all presently motorized outside air (N.C.) return air (N.O.), and relief air dampers (N.C.). If the existing relief dampers are “barometric”, no actuator will be required. All AHU damper actuators shall be modulating and accept a 4-20mA or 0-10VDC control signal, and shall have spring return to the normal position as indicated in this paragraph.

3.4 ELECTRIC/ELECTRONIC CONTROL VALVES

Electric/electronic Control Valves shall be provided but not limited to all existing AHU cooling coils, AHU pre-heat coils, Variable Speed Pumping (VSP) valves, and Low Temperature Water Converter valves and reheat valves. Control valve actuators shall be electronic and accept 4-20mA, 2-10VDC or 0-10VDC control signal. No other control type will be acceptable including 3-point floating control. The Government or engineering firm shall supply all information needed for sizing new valves.

3.5 CONTROL RELAYS

Control relays shall be furnished as required to isolate control circuits from one another or to operate loads that are beyond the capability of the DDC card Binary Outputs. All control relays shall be of the “ice cube” style (IDEC RH Series or equal), enclosed with separable mounting bases and status LED’s to indicate the relay coil is energized. All control relay bases will be mounted on DIN rail. All control relays shall have bases and contacts with an electrical and mechanical rating suitable for the controlled equipment. When the relay is accessible from ground level without the use of a step, an enclosed relay suitable for mounting in an electrical box’s knockout may be remotely mounted at the controlled equipment. Remote mounted relays in a box (RIB) may be used in some applications, but should be pre-approved by the DPW-UMCS department.

3.6 DUCT STATIC PRESSURE SENSORS

Duct Static Pressure Sensors shall be furnished as indicated in the I/O list. Static pressure sensors shall produce a linear 4-20mA signal over a span of 0-3inWC or 0-5inWC via a 2-wire configuration. Range depends on pressure requirements. The high side of the static pressure sensor shall be connected to the supply ductwork at point 2/3 of the way downstream from the supply fan outlet and the entrance to the VAV box at the end of the longest duct, closer to the VAV box inlet.

3.7 LOW DIFFERENTIAL PRESSURE TRANSMITTER

3.7.1 Building Static Pressure

Building static pressure referenced to the Outside Air shall be measured by a low range differential pressure sensor having a bidirectional range such as –0.25inWC to +0.25inWC via a 2-wire configuration and shall produce a linear 4-20mA. One side of the pressure sensor shall sense the static

pressure outside the building thru a new sensing chamber mounted outside of the equipment room. The other side shall sense the building's internal pressure thru a new sensing tube located in the conditioned space. All low differential static sensing tubes shall be a minimum of 1" diameter trade size.

3.8 DUCT STATIC HIGH LIMIT SWITCHES

Duct Static High Limit Switches shall be furnished for all AHU's having supply fan CFM capacity control. The Static High Limit switch shall have a range of 0-5inWC, a N.C. primary contact wired to shut down the AHU fan(s) either directly or thru an interposing relay, and an auxiliary N.O. contact for connection to the UMCS for remote monitoring.

3.9 CURRENT OPERATED SWITCH (C.O.S)

A split-core adjustable range Current Operated Switch (C.O.S.) shall be used for any pump or fan statuses unless status is provided via a contact from equipment such as Variable Frequency Drives(VFD), Chiller control panels, or Boiler Control Panels. The C.O.S. shall be adjusted to indicate the true fan status under load, such that a broken belt or pump coupling will result in a fan alarm. Differential pressure switch shall not be used for fans or pumps controlled by a VFD. load, such that a broken belt or pump coupling will result in a fan alarm.

3.10 DDC LOCAL CONTROLLERS

DDC Local Controllers shall be Dorsett's MicroScan 4(or Newer) controller. This includes VAV controllers.

A Dorsett UNV or XTalk connected to the Ft Gordon network shall be furnished. The contractor shall request an IP address for the UNV or XTalk from the DPWL via the KO to make the Device accessible to the UMCS servers thru the post network. The UNV or XTalk shall be installed at the earliest possible date to facilitate software programming and government surveillance.

3.10.1 INTERFACE COMMUNICATIONS

The use of a communication interface is only allowed under certain circumstances and must be pre-approved for use by the DPW-UMCS department. Generally, this type interface will only be allowed for VFD's, Boilers, Chillers, and Dorsett Control Stats. This has to be a RS-485 direct connection from the Dorsett Controller (UNV/XTalk or Newer) to the equipment with no gateways or protocol converters. The only protocols allowed are BACnet MS/TP and Modbus-RTU. Protocols such as LONworks are not allowed or compatible with the Fort Gordon UMCS system.

3.11 CONTROL PANELS

DDC Control panels shall be constructed to the exact design as the Dorsett manufactured control panels. They must be metallic in construction, meeting NEMA 1 requirements unless otherwise noted. No penetrations of the top of the enclosures are permitted for conduit and wiring access. Control panels shall include power supplies, controller cards, terminal blocks for all Outputs (analog and digital) separate from the controller card. All control

devices shall be powered from the DDC control panel. All actuators will be wired from the control panel, including 24 VAC power. The control panel shall be equipped with AC line and communications surge protection. AC equipment protection shall meet the requirements of IEEE C62.41. Fuses shall not be used for surge protection. The surge protection shall meet the requirements of UL1449 for AC protection and IEEE 587 for communications. Surge devices shall be connected to ground conductors tested to ensure ground conductance. All safety loops and control circuits shall originate in the control panel. Loops are not acceptable. Panels shall be sized for a minimum of 25% expansion of the I/O capacity. This includes capacity for adding more cards.

All control panels shall be equipped where applicable with heat and/or ventilation as necessary to maintain interior conditions between the ranges of 32F to 122F, non-condensing.

All safeties such as freeze stats shall be mechanical devices independent of any software programming. All safety devices shall operate through HOA switches both in the hand and automatic position

The equipment and hardware controlled shall include but not be limited to controls for AHU’s, VAV boxes, Reheat boxes, CHW Pumps, LTW Pumps, LTW Converters, fan coil units, heat pumps.

The contractor shall furnish all labor and miscellaneous electrical materials as required to install the system.

Cabling in exposed locations, mechanical rooms, and basements shall be installed in raceways in accordance with the National Electrical Code and all applicable codes and ordinances.

The minimum size for any control wire conduit is 0.75”. 0.5” conduit will not be accepted.

Communication Cable - Twisted pair cable having a characteristic impedance of 120 ohms is required for all RS-485 cabling, inclusive of inter-panel wiring. Twisted pair cable is simply two wires of equal length which have been wound or twisted together. A “jacket” encloses the twisted pair to form one unified cable. This cable must be shielded. Shielded twisted pair (STP) incorporates a metal foil wrapped around the twisted pair for the length of the cable. For more information such as wring topology, recommended cable part numbers etc; refer to “Attachment A” ‘EIA/TIA-485 Wiring Guideline’ documentation.

The mechanical contractor or equivalent shall retain the services of a Test and Balance contracting firm that is certified by NEBB to perform a test and balance of the air and water side of the system after the controls installation is complete.

4.0 SYSTEM START-UP, COMMISSIONING, AND ACCEPTANCE

The project will not be considered to provide “beneficial use” to the Owner until the following procedures have been completed:

4.1 Testing Criteria

The following criteria shall be followed for testing:

4.1.1 Compliance Demonstration

Demonstrate compliance of the heating, ventilating, and air conditioning control system with the contract documents. Furnish personnel, equipment, instrumentation, and supplies necessary to perform calibration and site testing. Ensure that test personnel are regularly employed in the testing and calibration of DDC systems.

4.1.2 Testing

Testing will include field tests and performance verification tests. Field tests shall demonstrate proper calibration of input and output devices, and the operation of specific equipment. The field tests shall include complete end to end (Info-Scan host to field point) testing of each I/O point by contractor personnel. UMCS personnel shall observe the testing during normal duty hours. Performance verification test shall ensure proper execution of the sequence of operation and proper tuning of control loops.

Tests are subject to oversight and approval by the Contracting Officer. The testing shall not be run during scheduled seasonal off-periods of heating and cooling systems.

4.4 TEST REPORTING FOR FIELD TESTING AND PERFORMANCE VERIFICATION TESTS

During and after completion of the Field Tests, and again after the Performance Verification Tests, identify, determine causes, replace, repair or calibrate equipment that fails to meet the specification, and submit a written report to the Government.

Document all tests with detailed test results. Provide a written report containing test documentation after the Field Tests and again after the Performance Verification Tests. Convene a test review meeting at the job site to present the results to the Government. As part of this test review meeting, demonstrate by performing all portions of the field tests or performance verification test that each failure has been corrected. Based on the report and test review meeting, the Government will determine either the restart point or successful completion of testing.

4.5 CONTRACTOR'S FIELD TESTS

Field tests shall include the following:

4.5.1 System Inspection

Observe the HVAC system in its shutdown condition. Check dampers and valves for proper normal positions. Document each position for the test report.

4.5.2 Calibration Accuracy and Operation of Inputs Test

Verify correct calibration and operation of input instruments. For each sensor and transmitter, including those for temperature, pressure, humidity, and air quality, record the reading at the sensor or transmitter location using calibrated test equipment. On the same table, record the corresponding reading at the digital controller for the test report. The test equipment shall have been calibrated within six months of use. Test equipment

calibration shall be traceable to the measurement standards of the National Institute of Standards and Technology.

4.5.3 Actuator Range Adjustment Test

With the digital controller, apply a control signal to each actuator and verify that the actuator operates properly from its normal position to full range of stroke position. Record actual spring ranges and normal positions for all modulating control valves and dampers. Include documentation in the test report.

4.5.4 Digital Controller Startup and Memory Test

Demonstrate that programming is not lost after a power failure, and digital controllers automatically resume proper control after a power failure.

4.5.5 Surge Protection Test

Show that surge protection, meeting the requirements of this specification, has been installed on incoming power to the digital controllers and on communications lines.

4.5.6 Application Software Operation Test

Test compliance of the application software for:

4.5.7 Communication Ability

Ability to communicate with digital controllers and downloading of control programs.

4.5.8 Reporting of Alarm Conditions

Force alarms conditions for each alarm, and ensure workstation receives alarms.

4.6 PERFORMANCE VERIFICATION TESTS

Conduct the performance verification tests to demonstrate control system maintains set points, control loops are tuned, and controllers are programmed for the correct specified sequence of operation. Conduct performance verification test for at least two days of continuous HVAC and DDC systems operation and before final acceptance of work. Specifically the performance verification test shall demonstrate the following:

4.6.1 Execution of Sequence of Operation

Demonstrate the HVAC system operates properly through the complete sequence of operation, for example seasonal, occupied/unoccupied, and warm-up. Demonstrate proper control system response for abnormal conditions by simulating these conditions. Demonstrate hardware interlocks and safeties work. Demonstrate the control system performs the correct sequence of control after a loss of power.

4.6.2 Control Loop Stability and Accuracy

Furnish the Government graphed trends of control loops to demonstrate the control loop is stable and that set point is maintained. Control loop trend data shall be real time and the time between data points shall not be greater than one minute.

All displays have been checked by the Owner for accuracy and corrected.

Completion of a joint final inspection with representatives of the Contractor, UMCS and the government present.

4.6.3 FINAL ACCEPTANCE AND PROJECT CLOSEOUT

Project closeout and final acceptance is contingent upon the following:

All field hardware shall be labeled to match the instrument tags shown on the as-built drawings. The tags shall be machine made with a font that is readable from ground level. The Owner will review and approve all fonts prior to the labels being made. Wire labels shall be the sleeve type. See Attachment B for more details.

As-built drawings for each system related to the control panel shall be laminated and permanently installed inside of each control panel.

The Contractor shall provide (5) copies of the Operating and Maintenance manuals to the Government on CD-ROM and one hard copy bound in three ring binder. The as-built documentation shall include:

As-built drawings and the written sequences of operation. Sequences included on As-Built drawings will be acceptable.

Manufacturer's data sheets, maintenance manuals, recommended maintenance task lists, and troubleshooting guides for all hardware furnished.

As-Built Drawings may be submitted in PDF form. However, a copy of the drawings must also be provided in Bentley Intergraph CADD Software format. The contractor is to verify with the Owner the version level to be provided.

Display backgrounds in Visio 2003 format.

Sequences of operation in Microsoft "Word" and "Portable Document Format".

5.0 WARRANTY

Installing contractor's warranty letter stating the beginning warranty date, ending warranty date, procedures to contact the contractor including telephone, fax, and e-mail address.

Warranty will not start until Owner has accepted the project unless exceptions are made by the Owner.

6.0 GOVERNMENT RESPONSIBILITIES

6.1 Government shall provide the following:

6.1.1 Contractor Network Access

Network availability to contractor for the purposes of creating database and displays, testing commissioning, warranty, report generating, calibrations, etc.

6.1.2 Design Requirements

Government will provide design criteria for sizing valves such as pipe size, required GPM, pressure drop, etc

6.1.3 NETWORKING

The Government will provide 2 I/P address.
One for addressing of the main controller of the building, ie UNV, xtalk, ETC

The second I/P will be used for Building start ups, commissioning and testing purposes?

-- End of Section --

APPENDIX GG

Decorative Security Grilles
Example from Bldg 29715

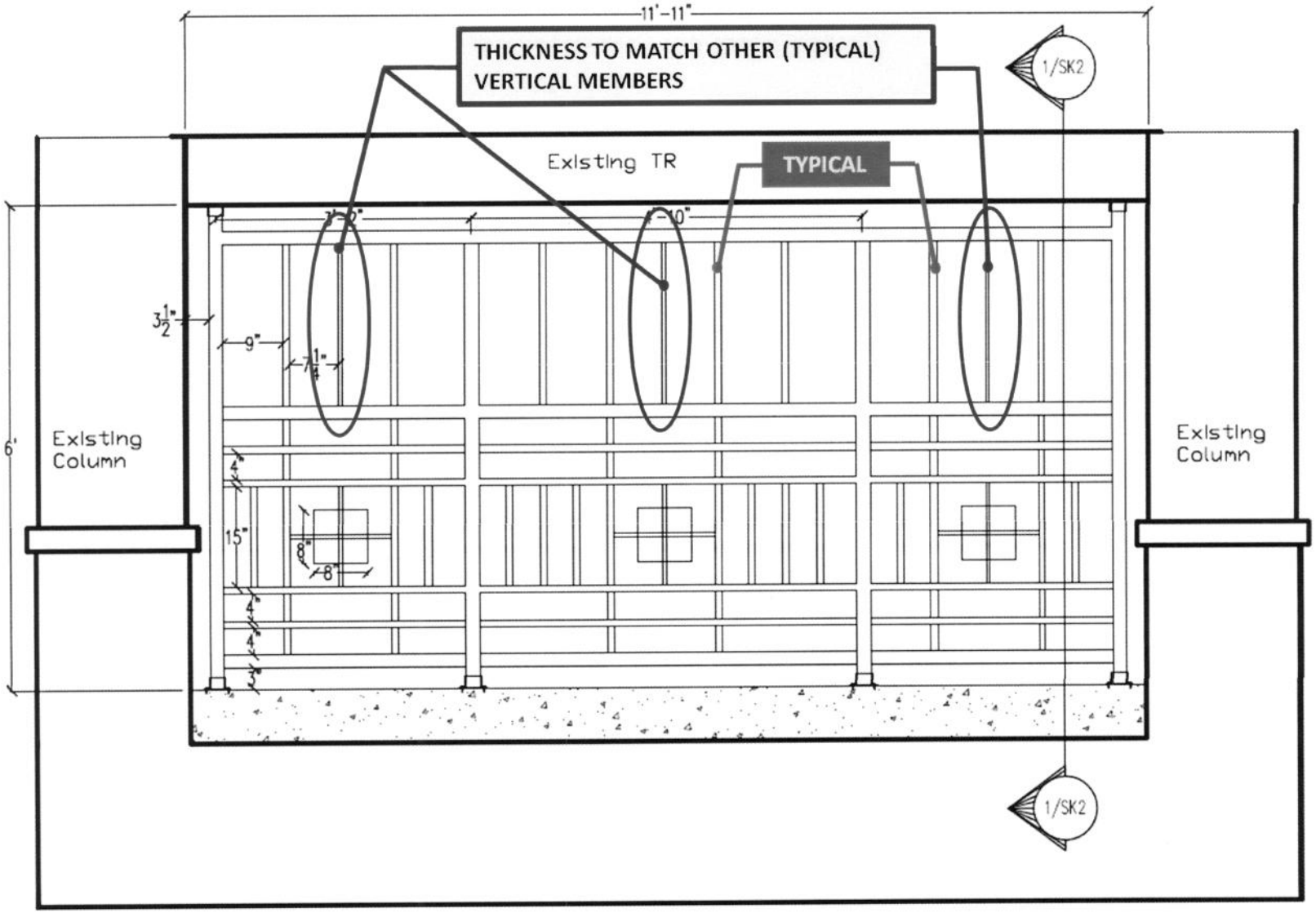

Decorative Security Grilles
on Bldg-29715

Section:

APPENDIX HH

LIFE SAFETY SPECIFICATION FOR FIRE ALARM SYSTEMS (W/MASS NOTIFICATION)

FIRE ALARM AND MASS NOTIFICATION SYSTEM

PART 1 GENERAL

1.1 SECTION INCLUDES

A. 1.2 Products Furnished but not Installed and Products Installed but not Furnished Under This Section as well as Products not Furnished or Installed but Integrated with the Work of This Section

B. 1.3 Related Sections

C. 1.4 Description

D. 1.5 Quality Assurance

E. 1.6 Codes and Standards

F. 1.7 System Performance

G. 1.8 Submittals

H. 1.9 Warranty

I. 1.10 Ownership of Proprietary Material

K. 1.11 Specification Compliance Review

1.2 PRODUCTS FURNISHED BUT NOT INSTALLED AND PRODUCTS INSTALLED BUT NOT FURNISHED UNDER THIS SECTION AS WELL AS PRODUCTS NOT FURNISHED OR INSTALLED BUT INTEGRATED WITH THE WORK OF THIS SECTION

1.3 RELATED SECTIONS

A. The General Conditions of the Contract, Supplementary Conditions, and General Requirements are a part of this specification and shall be used in conjunction with this section as a part of the Contract documents. Consult them for further instructions pertaining to this work. The Contractor is bound by the provisions of Division 0 and Division 1.

B. The following sections constitute related work:
1. Section 1xxxx—Commissioning
2. Section 16xxx—Basic Electrical Requirements
3. Section 16xxx—Basic Electrical Materials
4. Section 16xxx—General Wiring

1.4 DESCRIPTION OF WORK

A. This Specification provides the requirements for the installation, programming and configuration of a complete addressable intelligent network-based Fire Alarm / MNS network for Fort Gordon US Army Installation. The system shall include, but is not limited to: fire alarm control panel(s), automatic and manually activated alarm initiating and notification devices and appliances, remote annunciator, conduit, wire, overvoltage/lightning protection for all circuits and Detailed Facility Graphics and associated Life Safety descriptors for the EBI interface and Data Base accessories required to furnish a complete and operational life safety system. Full smoke detection is required in all buildings regardless of automatic sprinklers. Heat detectors should be provided in areas not suitable for smoke detectors. The system includes a graphic based operator workstation (OWS) with full control functionality. Equipment and labor not specifically referred to herein or on the plans, but which are required to meet the functional intent, shall be provided without additional cost to the Installation. Performance and capabilities are based on the Honeywell Building Solutions EBI Life Safety Management System (LSMS). This work includes the supply and installation of a complete Honeywell XLS-140 Addressable Fire Alarm with XLS-DVC Mass Notification System as described herein and on the associated contract drawings.

B. Work described in this section shall be installed, wired, circuit tested, and calibrated by factory-certified technicians qualified for this work and in the regular employment of the company named on the UL Listing Card for the control equipment. The installing “factory direct” office shall have a minimum of 5 years of installation experience with the manufacturer and shall provide documentation in the submittal package verifying longevity of the installing company's relationship with the manufacturer. Supervision, calibration, and checkout of the system shall be performed by the employees of the local factory-owned Fire Alarm / MNS contracting field office. Supplier shall have an in-place support facility within 75 miles of the site with technical staff, spare parts inventory, and all necessary test and diagnostic equipment. Any deviation from the installers qualification requirements listed above or herein must be approved in writing by the DPW Authority Having Jurisdiction.

C. The Fort Gordon Life Safety Management System (LSMS) system uses a UL Listed client/server architecture based around a modular PC network, utilizing industry standard operating systems, network devices, and protocols. The Addressable Fire Alarm and Mass Notification System equipment and material shall be U.L. listed or F.M. approved for it’s intended use. All listings or approvals by testing laboratories shall be from an existing ANSI or U.L. standard.

D. The system shall allow the distribution of system functions such as monitoring and control and graphical user interface across the network to allow maximum flexibility and performance. The architecture shall support various Wide Area Networks (WAN) using standard hardware and software to link nodes into a

single integrated system. The network protocol shall be industry standard TCP/IP. The system shall support remote configuration and operation using standard dial-up modems.

E. Redundant server: Shall be provided as needed to support the addition of New Facilities. Servers will be UL approved fully compatible systems. Coordination with the DPW Operations & Maintenance will be required to identify additional capacity.

F. Distributed system server: Shall be provided as needed to support the addition of New Facilities. Servers will be UL approved fully compatible systems. Coordination with the DPW Operations & Maintenance will be required to identify additional capacity.

G. LSMS management and control functions to be provided as required.

H. At a minimum, the following data shall be accessible:
   1. Panel alarms
   2. Panel supervisory alarms
   3. Panel troubles
   4. Panel communications status
   5. Device status

1.5 QUALITY ASSURANCE

A. Manufacturer qualifications:
   1. The fire alarm system shall be manufactured by an ISO 9001 certified company and meet the requirements of BS EN9001: ANSI/ASQC Q9001-1994.
   2. All work described in this section shall be installed, wired, circuit tested, and calibrated by technicians certified by the National Institute for Certification in Engineering Technologies (NICET). These technicians shall be registered as level 2 or higher in the fire protection technology certification program.
   3. Service availability: The supplier shall have sufficient stock on hand and have a fully equipped service organization capable of guaranteeing response time within 4 hours of service calls, 24 hours a day, 7 days a week to service completed systems. The service office shall be located within 75 miles of the project site.
   4. Contractor shall provide 100 percent of all services with company personnel. No portion of services can be subcontracted to others without express written permission of the customer; with such permission, all specifications, terms, and conditions specified herein shall be the responsibility of the prime contractor
   5. Components shall be of current design and shall be in regular and recurrent production at the time of installation. Provide design, materials, and devices for a protected premises fire alarm system,

complete, conforming to NFPA 72 2010, except as otherwise or additionally specified herein.

B. Design Services

Installations requiring completion of installation drawings and specification or modifications of fire detection and alarm, fire suppression systems or mass notification systems shall require the services and review of a qualified engineer. For the purposes of meeting this requirement, a qualified engineer is defined as an individual meeting one of the following conditions:

1. A registered professional engineer having a Bachelor of Science or Masters of Science Degree in Fire Protection Engineering from an accredited university engineering program, plus a minimum of five years work experience in fire protection engineering.
2. A registered professional engineer (P.E.) with Member Grade in the Society of Fire Protection Engineers.
3. Registered Professional Engineer with verification of experience and at least five years of current experience in the design of the fire protection and detection systems.

C. Onsite personnel

1. Supervisor
   The installing Contractor shall provide a NICET Level 3 Fire Alarm technician shall supervise the installation of the fire alarm system/mass notification system. The Fire Alarm technicians supervising the installation of equipment shall be factory trained in the installation, adjustment, testing, and operation of the equipment specified herein and on the drawings.

2. Technician
   If technicians in addition to the supervisor listed above are required, the installing Contractor shall provide NICET Level 2 Fire Alarm technicians with a minimum of two years of experience. The Fire Alarm technicians shall be factory trained in the installation, adjustment, testing, and operation of the equipment specified herein and on the drawings.

3. Installer
   The installing Contractor shall provide Fire Alarm installers with a minimum of two years of experience in the installation of fire alarm systems. The installing Contractor shall be utilized to install the fire alarm/mass notification devices, cabinets and panels. An electrician shall be allowed to install conduit with string for the fire alarm system/mass notification system. The Fire Alarm installer shall be factory trained in the installation, adjustment, testing, and operation of the equipment specified herein and on the drawings.

4. Test Personnel

The fire alarm contractor shall provide NICET Level 2 or 3 Fire Alarm technicians with a minimum of four years of experience to test and certify the installation of the fire alarm/mass notification devices, cabinets and panels. The Fire Alarm technicians testing the equipment shall be factory trained in the installation, adjustment, testing, and operation of the equipment specified herein and on the drawings.

5. Manufacturer's Representative
   The fire alarm and mass notification equipment manufacturer's representative shall be responsible for the connection of wiring to the control panel. The Manufacturer's Representative shall be an employee of the manufacturer with necessary technical training on the system being installed.

6. Any deviation from the installers qualification requirements listed above must be approved in writing by the DPW Authority Having Jurisdiction.

1.6 CODES AND STANDARDS

A. All work, materials, and equipment shall comply with the rules and regulations of all codes and ordinances of the local, state, and federal authorities having jurisdiction. Such codes, when more restrictive, shall take precedence over these plans and specifications. The specifications and standards listed below form part of this specification. The system shall fully comply with the latest issue of these standards if applicable:
   1. International Building Code (IBC)
   2. National Fire Protection Association (NFPA)
      a. NFPA72—National Fire Alarm Code
      b. NFPA101—Life Safety Code
      c. NFPA170—Standard for Fire Safety and Emergency Symbols
      d. NFPA241—Standard for Safeguarding Construction, Alteration, and Demolition Operations
      e. NFPA90A—Standard for the Installation of Air Conditioning and Ventilating Systems
      f. NFPA70—National Electrical Code
      g. NFPA13—Standard for the Installation of Sprinkler Systems
      h. NFPA 96 - Standard for Ventilation Control and Fire Protection of Commercial Cooking Operations

   3. Underwriters Laboratories (UL)
      a. UL 864—UOJZ Control Units for Fire Protective Signaling Systems, Ninth Edition (minimum)
      b. UL 268—Smoke Detectors for Fire Protective Signaling Systems
      c. UL 268A—Smoke Detectors for Duct Applications
      d. UL 217—Smoke Detectors Single Station

e. UL 521—Heat Detectors for Fire Protective Signaling Systems
f. UL 228—Door Holders for Fire Protective Signaling Systems
g. UL 464—Audible Signaling Appliances
h. UL 1638—Visual Signaling Appliances
i. UL 38—Manually Activated Signaling Boxes
j. UL 346—Waterflow Indicators for Fire Protective Signaling Systems
k. UL 1480—Standard for Safety Speakers for Fire Alarm, Emergency, and Commercial & Professional use.
l. UL 1971—Signaling Devices for the Hearing Impaired
m. UL 2017—Standard for Safety for General-Purpose Signaling Devices and Systems
n. UL 1481—Power Supplies for Fire Protective Signaling Systems

4. Federal Communications Commission**:** All electronic equipment shall conform to the requirements of FCC Part 15, Section 15 governing radio frequency electromagnetic interference and be so labeled. Equipment which is to be interconnected to the public switched telephone network shall meet FCC Part 68 requirements and be so labeled.
5. All applicable Uniformed Facilities Criteria requirements, including but not limited to:

a. UFC 3-600-01 – Fire Protection Engineering for Facilities

b. UFC 4-021-01 – Design and O&M: Mass Notification Systems

1.7 SYSTEM PERFORMANCE – MUST BE COMPATIBLE WITH AND COMMUNICATE WITH EXISTING EBI SYSTEM . THE RF TRANSMITTER MUST COMPATIBLE WITH AND COMMUNICATE WITH MONACO D21 .

1.8 SUBMITTALS

A. Product data and shop drawings shall meet requirements of Section 01 33 00 on Shop Drawings, Product Data, and Samples. In addition, contractor shall provide shop drawings or other submittals on all hardware, software, and installation to be provided. No work may begin on any segment of this project until submittals have been successfully reviewed for conformity with the design intent. Eight copies are required. All drawings shall be prepared on a CAD system that produces drawing files compatible with Micro Station or AutoCAD Release 2000 (or higher) and be provided on optical disk and as 11 x 17 inch drawings. All references to manufacturer's model numbers and other pertinent information herein is intended to establish minimum standards of performance, function and quality. When manufacturer’s cut sheets apply to a product series rather than a specific product, the data specifically applicable to the project shall be highlighted or clearly indicated by other means. Each submitted piece of literature and drawings shall clearly reference the specification and drawing that the submittal is to cover. General catalogs shall

not be accepted as cut sheets to fulfill submittal requirements. For equipment other than that specified, the contractor shall supply proof that such substitute equipment equals or exceeds the features, functions, performance, and quality of the specified equipment. Submittals shall be provided within 10 weeks of contract award. Submittals shall include:

1. Fire Alarm / MNS hardware:
   a. A complete bill of materials of equipment to be used indicating quantity manufacturer, model number, and other relevant technical data.
   b. Manufacturer's description and technical data, such as performance curves and product specification sheets for the items listed below and other relevant items not listed below:
      1) Fire alarm control panels
      2) Remote Annunciator Panel
      3) Local Operator's Console
      4) Fault tolerance isolation
      5) Notification appliances
      6) Smoke detectors
      7) Duct Smoke Detectors
      8) Manual Pull Stations
      9) Waterflow and tamper module
      10) Emergency communications system
      11) Fire fighters telephone system
      12) Power supply
      13) Batteries
      14) Operator interface equipment
      15) Fire Network Adapter
      16) Radio Transmitter, including all accessories
      17) Wiring
         a) Wiring diagrams and layouts for each control panel. Show all termination numbers.
         b) Schematic diagrams for all field sensors and panels. Provide floor plans of all sensor locations and control hardware.

c. Battery Power Calculations: Assume a starting voltage of 24 VDC for starting the calculations to size the batteries. Calculate the required Amp-Hours for the specified standby time, and then calculate the required Amp-Hours for the specified alarm time. Calculate the nominal battery voltage after operation on batteries for the specified time period. Using this voltage perform a voltage drop calculation for circuit containing device and/or appliances remote from the power sources. Provide complete battery calculations for the alarm, alert and supervisory power requirements. Ampere-hour requirements for each system component shall be submitted with the calculations. A voltage drop calculation to indicate that sufficient

voltage is available for proper operation of the system and all components, at the minimum rated voltage of the system operating on batteries.

2. Fire Alarm Control Panel system hardware and software:

a. A complete bill of materials of equipment to be used, indicating quantity, manufacturer, model number, and other relevant technical data.
b. Schematic diagrams of wiring between central control unit and all control panels.
c. Detailed system operational description.

3. Quantities of items submitted shall be reviewed, but are the responsibility of the contractor.

4. System calculations: Complete calculations shall be provided showing the electrical load on the following system components:

a. Each system power supply, including standalone booster supplies
b. Each standby power supply (batteries)
c. Each notification appliance circuit, current load and voltage drop
d. Each auxiliary control circuit that draws power from any system power supply

5. A description of the proposed process, along with all report formats and checklists to be used in Part 3: System Demonstration and Acceptance.

A. Schedules: (For Fire Alarm only projects)

1. Within one month of contract award, provide a schedule of the work indicating the following:
   a. Intended sequence of work items
   b. Start dates of individual work items
   c. Duration of individual work items
   d. Planned delivery dates for major material and equipment and expected lead times
   e. Milestones indicating possible restraints on work by other trades or situations
2. Provide bi-weekly written status reports indicating work completed and revisions to expected delivery dates. An updated project schedule is required each calendar month.

B. Project record documents: Upon completion of installation, submit six copies of record as-built documents. The documents shall be submitted for approval prior to final completion and shall include:

1. Project record drawings. These shall be as-built versions of the submittal shop drawings. Provide one set of optical media, including CAD, .DWG, or .DXF drawing files.

2. Testing and commissioning reports and checklists. Completed versions of all reports and checklists, along with any trend logs, used to meet the requirements of Part 3: System Demonstration and Acceptance.
3. Operation and Maintenance (O & M) Manual. This shall include as-built versions of the submittal product data. Included:
   a. Names, addresses, and 24-hour telephone numbers of contractors installing equipment and the control systems and service representatives of each.
   b. Operators manual with procedures for operating the control systems, including logging on and off, alarm handling, producing point reports, trending data, overriding computer control, and changing set points and other variables.
   c. One set of programming manuals with a description of the programming language (including syntax), statement descriptions (including algorithms and calculations used), point database creation and modification, program creation and modification, and use of the editor.
   d. Engineering, installation, and maintenance manual(s) that explain how to design and install new points, panels, and other hardware; preventive maintenance and calibration procedures; how to debug hardware problems; and how to repair or replace hardware.
   e. Listing and documentation of all custom software created using the programming language, including the set points, tuning parameters, and object database. One set of magnetic or optical media containing files of the software and database shall be provided.
   f. One set of magnetic or optical media containing files of all color graphic screens created for the project.
   g. List of recommended spare parts with part numbers and suppliers.
   h. Complete original issue documentation, installation, and maintenance information for all third-party hardware provided, including computer equipment and sensors.
   i. Complete original issue diskettes for all software provided, including operating systems, programming language, operator workstation software, and graphics software.
   j. Licenses, guarantees, and warranty documents for all equipment and systems.
   k. Recommended preventive maintenance procedures for all system components, including a schedule of tasks (inspection, cleaning, calibration), time between tasks, and task descriptions.

1.9 WARRANTY

A. Warrant all work as follows:
   1. Labor and materials for the Fire Alarm / MN System specified shall be warranted free from defects for a period of 12 months after final completion and acceptance. Fire Alarm / MN System failures during the

warranty period shall be adjusted, repaired, or replaced at no additional cost or reduction in service to the Installation. The contractor shall respond to the Installation's request for warranty service within 24 hours during normal business hours. Warranty service on electronic equipment shall be provided by a NICET Level II Certified and factory trained specialist employed by the company named on the UL Listing Card for the control equipment.

2. All work shall have a single warranty date, even when the Installation has received beneficial use due to an early system start-up. If the work specified is split into multiple contracts or a multi-phase contract, then each contract or phase shall have a separate warranty start date and period.
3. At the end of the final start-up, testing, and commissioning phase, if equipment and systems are operating satisfactorily to the Installation, the Installation shall sign certificates certifying that the control system's operation has been tested and accepted in accordance with the terms of this specification. The date of acceptance shall be the start of warranty.
4. Operator workstation software, project-specific software, graphic software, database software, and firmware updates that resolve known software deficiencies as identified by the contractor shall be provided at no charge during the warranty period. All corrective software modifications made during warranty period shall be updated on all user documentation and on user and manufacturer archived software disks. The onsite installation of any upgrades or functional enhancements associated with the above-mentioned items can be provided during the warranty period for an additional charge to the Installation by purchasing an in-warranty service agreement from the contractor. Written authorization by the Installation shall, however, be granted prior to the installation of any of the above-mentioned items.
5. The guarantee shall include, but is not limited to: fire alarm control panel(s), automatic and manually activated alarm initiating and notification devices and appliances. A complete warranted system by a single Fire Alarm vendor.

1.10 OWNERSHIP OF PROPRIETARY MATERIAL

A. All project-developed software and documentation shall become the property of the Installation. These include, but are not limited to:
1. Project graphic images
2. Record drawings
3. Project database
4. Project-specific application programming code
5. All documentation

1.11 SPECIFICATION COMPLIANCE REVIEW

A. The LSMS contractor shall supply, at the time of solicitation opening, a paragraph-by-paragraph specification compliance report. The report shall

indicate, for each numbered paragraph, how the contractor meets the criteria of the paragraph. The following format shall be used in completing the compliance report:

1. Comply—without exception.
2. Qualify—meet the functional intent. For each paragraph, the contractor shall identify all differences in specific functions stated in the given paragraph and provide a description of what is excluded or how the qualifying system will meet the function specified.
3. Does not comply—cannot meet specified function.

SECTION 28 31 76

PART 2 PRODUCTS

2.1 SECTION INCLUDES

A. 2.2 Materials

B. 2.3 Communications

C. 2.4 Operator Station Interface

D. 2.5 Operator Station

E. 2.6 Custom Display Creation

F. 2.7 Main Fire Alarm Control Panel

G. 2.8 System Components

H. 2.8 System Components –Addressable Devices

I. 2.9 Batteries

2.2 MATERIALS

A. All products used in this project installation shall be new and currently under manufacture and shall have been applied in similar installations for a minimum of two years. All components and systems shall be designed for uninterrupted duty. All equipment, materials, accessories, devices, and other facilities covered by this Specification or noted on Contract drawings and installation specifications shall be tested and listed by a nationally recognized approvals agency for use as part of a protective signaling system meeting the National Fire Alarm Code. If any of the equipment provided under this Specification is provided by different manufacturers, then that equipment shall be “Listed” as to its compatibility by Underwriters’ Laboratories (UL), if such compatibility listing is required by UL standards. This installation shall not be used as a test site for any new products unless explicitly approved by the Installation's representative in writing. Spare parts shall be available for at least five years after completion of this contract.

B. The Addressable Interior Fire Alarm and Mass Notification System shall be a complete Class X (NFPA 72, 2010 edition) level 1 supervised, non-coded, addressable fire alarm and mass notification system conforming to NFPA 72, UL 864 UOJZ Ninth Edition, and UL 2017. The Addressable Interior Fire Alarm and Mass Notification System shall be a Honeywell Model XLS-140 with Digital Voice Command, as supplied by Honeywell Building Solutions and must be able to communicate to the existing EBI Host Servers using the

existing EBI-XLS LAN communication infrastructure already in use at the base. The system shall be activated into the alarm mode by actuation of any alarm initiating device. The system shall remain in the alarm mode until the initiating device is reset and the fire alarm control panel is reset and restored to normal. The system maybe placed in the alert mode by local microphones or remotely from authorized locations/users.

2.3 COMMUNICATIONS

A. Contractor shall provide dedicated connectors, repeaters, hubs, and routers necessary for the internetwork operation not specified elsewhere in Section 13850, but required to provide the specified Section 13850 functionality. All necessary repeaters (Black Box) must be approved by DOIM.

B. Contractor shall provide serial modem communication hardware, cabling, and RFI and EMI filters to allow for remote operator interface. Remote operator interface shall permit communication with all panels on this network as described in paragraph D below.

C. Communication services over the internetwork shall result in operator interface and value passing that is transparent to the internetwork architecture as follows:

1. Connection of an operator interface device to any one panel on the internetwork will allow the operator to interface with all other panels as if that interface were directly connected to the other panels. Data, status information, reports, system software, and custom programs for all panels shall be available for viewing and editing from any one panel on the internetwork.
2. All database values (e.g., objects, software variables, custom program variables) of any one panel shall be readable by any other panel on the internetwork. A panel shall automatically perform this value passing when a reference to an object name not located in that panel is entered into the panel’s database. An operator or installer shall not be required to set up any communication services to perform internetwork value passing.

D. Time clocks in all panels shall be automatically synchronized daily via the internetwork. Operator changes to the time clock in any panel shall automatically broadcast to all panels on the internetwork.

E. The internetwork shall have the following minimum capacity for future expansion:

1. Support greater than 90 separate communications links to networks of control devices.
2. Support a minimum of 40 simultaneous operator workstation connections using TCP/IP local area network (LAN) subject to hardware capacity on the server.

3. System size shall be expandable to at least three times the number of hardware and software input and output points required for this project, or 12,000 points, whichever is greater.

2.4 OPERATOR STATION INTERFACE –

A. The fire alarm control panel(s) shall be connected to the existing Fort Gordon supervising station (Honeywell EBI).
   1. Fire Network Adapters (FNA) shall be provided to interface the proposed building fire alarm and mass notification systems to operator workstations on the Honeywell Enterprise Buildings Integrator (EBI) building management system via a Local Area Network (LAN) or direct Ethernet connection.
   2. The FNA interfaces an XLS-NCS Network Control Annunciator, XLS-NCM Network Control Module, or XLS-NCS Network Control Station to the UL 864 listed supervising station Ethernet LAN via 10BaseT or AUI ports on the FNA.
   3. The FNA shall be powered from an auxiliary 24 VDC output of a fire alarm control panel, or from a UL 864 listed fire alarm power supply.
   4. The FNA shall be FCC Class A compliant, and UL 864 listed.

2.5 OPERATOR STATION – <u>As required by the DPW to facilitate a fully functional Fire Alarm and Mass Notification System</u>

2.6 CUSTOM DISPLAY CREATION

A. Provide a graphic display-building editor for the creation of site-specific graphic displays. It shall allow one-step online building of display static and dynamic objects. It shall be a WYSIWYG editor (what you see is what you get), allowing displays drawn using the editor to appear exactly the same when viewed from an operator workstation.

B. Create detailed graphic display that at a minimum contain the following information: detailed floor plans with device type and point data, means of egress, facility azimuth orientation, emergency points of contact, fire damper locations, hydrant location and capacities, FACP with functional control buttons, building number, type of occupancy, details of any suppression systems, street location, facility area descriptors, room numbers, location and details of FACP to include FNA IP's and RF Transmitter with Box Numbers in the HTML (Hypertext Markup Language) format. This is essential so that the displays can be viewed through a web browser as well as the normal LSMS operator interface. Save displays in the standard HTML format. Graphic elements shall be HTML elements. It is not acceptable to have an HTML format which merely links to a proprietary object or bit map of the entire display. View and edit the resulting HTML file using a text editor. Systems that do not support HTML displays shall not be acceptable.

C. Use the graphic display-building editor to create static objects, including static text, rectangles, arcs, and circles. Animate static objects to provide the dynamic characteristics of the real-world object the point represents.

D. The Custom Display will be supplied to the DPW Operations and Maintenance Division for approval prior to acceptance as a part of to the existing system GUI

2.7 MAIN FIRE ALARM CONTROL PANEL OR NETWORK NODE

A. FACP shall be a Honeywell Model XLS-140 supplied by Honeywell Building Solutions and shall contain a microprocessor based Central Processing Unit (CPU) and power supply in an economical space saving single board design. Mass Notification System aspects of the panel are described in paragraph 2.8. The CPU shall communicate and control the following types of equipment: intelligent addressable smoke and thermal (heat) detectors, addressable modules, printer, annunciators, and other system controlled devices.

B. System Capacity and General Operation

1. The control panel or each network node shall be capable of expansion to 636 intelligent/addressable devices.
2. Nodes shall include Form-C alarm, trouble, supervisory, and security relays rated at a minimum of 2.0 amps @ 30 VDC. and include four Class A (NFPA Style Z) programmable Notification Appliance Circuits as shown on job drawings.
3. Nodes shall support up to 8 additional output modules (signal, speaker, telephone, or relay), each with 8 circuits for an additional 64 circuits. These circuits shall be Class A (NFPA Style Z)
4. Provide a full featured operator interface control and annunciation panel that shall include a backlit Liquid Crystal Display (LCD), individual color coded system status LEDs, and an alphanumeric keypad with easy touch rubber keys for the field programming and control of the fire alarm system
5. System shall be programmable, configurable, and expandable in the field without the need for special tools, PROM programmers or PC based programmers. It shall not require replacement of memory ICs to facilitate programming changes.
6. System shall allow the programming of any input to activate any output or group of outputs. Systems that have limited programming (such as general alarm), have complicated programming (such as a diode matrix), or require a laptop personal computer are not considered suitable substitutes. The FACP shall support up to 20 logic equations, including "and," "or," and "not," or time delay equations to be used for advanced programming. Logic equations shall require the use of a PC with a software utility designed for programming.

7. Network Communication
   a. Network architecture shall be based on a Local Area Network (LAN), a firmware package that utilizes a peer-to-peer, inherently regenerative communication format and protocol. Failure of any node shall not cause failure or communication degradation of any other node or change the network communication protocol among surviving nodes located within distance limitations. Each node and panel shall communicate on the network at a baud rate of not less than 312 KBPS (kilo bits per second). Nodes may be an intelligent Fire Alarm Control Panel (FACP), or Network Control Annunciator (NCA). Network shall be expandable to at least 103 nodes.
   b. Network node address shall be capable of storing Event equations. The event equations shall be used to activate outputs on one network node from inputs on other network nodes.
   c. Network shall be capable of communicating via wire or fiber optic medium. Wire networks shall include a fail-safe means of isolating the nodes during power loss to a node.
   d. Network repeaters that are approved by DOIM shall be available to increase the twisted-pair distance capability in 3,000 ft. increments. As an option, a repeater shall be available for fiber optics that increases the cable distance in 10 dB increments. A mix (hybrid) fiber and wire network repeater shall be supported. Systems that have distance limitations, and have no available means to regenerate signals are not suitable substitute
   e. Fiber Optic Network Communication: Network shall support fiber optics with the following specifications:
      1) Size =62.5 micrometers / 125 micrometers
      2) Type=Multimode, Dual fiber, Plenum rated
      3) Distance=max 10dB total attenuation between network nodes
      4) Connector type=ST

C. Signaling Line Circuits (SLC)
   1. FACP or FACP network nodes shall support up to two SLCs. SLC interface shall provide power and communicate with up to 159 intelligent detectors (ionization, photoelectric or thermal) and 159 intelligent modules (monitor or control) for a loop capacity of 318 devices. The second loop shall double the device capacity, supporting a total of 636 devices. Each SLC shall be Class A, Style 7 or Class X, Fault Tolerant (isolator module every 10 devices) wiring as shown on the drawings.

D. Serial Interfaces
   1. System shall include two serial EIA-232 interfaces. Interfaces shall be a means of connecting UL Listed Information Technology Equipment (ITE) peripherals.

2. EIA-485 interface may be used for network connection to a proprietary-receiving unit.

E. Enclosures:
1. Control panel shall be housed in an UL-listed cabinet suitable for surface or semi-flush mounting. Cabinet and front shall be corrosion protected, given a rust-resistant prime coat, and manufacturer's standard finish.
2. Back box and door shall be constructed of 0.060 steel with provisions for electrical conduit connections into the sides and top.
3. Door shall provide a key lock and include a glass or other transparent opening for viewing indicators. Door may be site configured for either right or left hand hinging.

F. Power Supply:
1. An off-line switching power supply shall be provided for the fire alarm control panel or network node and provide 6.0 amps of available power for the control panel and peripheral devices.
2. Provisions will be made to allow the audio-visual power to be increased as required by adding modular expansion audio-visual power supplies.
3. Provide Positive-Temperature-Coefficient (PTC) thermistors, circuit breakers, or other over-current protection on all power outputs. Power supply shall have integral battery charger for use with batteries up to 55 AH or may be used with an external battery and charger system. Battery arrangement may be configured in the field.
4. Main power supply shall operate on 120 VAC, 60 Hz, and provide necessary power for the FACP.
5. Provide main power supply with a battery charger using dual-rate charging techniques for fast battery recharge capable of charging batteries up to 55 AH.
6. Circuits shall be power-limited, per UL864 requirements.

2.8 MASS NOTIFICATION

A. Provide a complete Honeywell XLS-DVC control panel, fully enclosed in a lockable steel enclosure with tamper switch that sends a supervisory trouble alarm to EBI as specified herein. Operations required for testing or for normal care and maintenance of the systems shall be performed from the front of the enclosure. If more than a single unit is required at a location to form a complete control panel, the unit enclosures shall match exactly. Each control unit shall provide power, supervision, control, and logic for the entire system, utilizing solid state, modular components, internally mounted and arranged for easy access. Each control unit shall be suitable for operation on a 120 volt, 60 hertz, normal building power supply. Provide each panel with supervisory functions for power failure, internal component placement, and operation. Visual indication of alarm, supervisory, or trouble initiation on the fire alarm control panel shall be by liquid crystal display with a minimum of 80 characters, that at least 32 are field changeable. The MNS system shall have the capability of temporarily deactivate the fire alarm audible notification

appliances while delivering voice messages. Provide Class A Style 7 fault tolerant notification appliance circuits as well as monitoring for temporary deactivation of fire alarm audible notification appliances. Provide operator console for initiating recorded messages, strobes and displays; and for delivering live voice messages. Provide capacity for at least four pre-recorded messages.

Provide the ability to deliver 4 simultaneous, unique messages to the appropriate audio zone based on the type and location of the event. The digital audio message generator shall support the digital storage of at least 16 minutes of tones and emergency messages, and shall support programming options to string audio segments together to create up to 1000 messages, or to loop messages and parts of messages to repeat for pre-determined cycles or indefinitely. Provide a secure microphone for delivering live messages. Provide adequate discrete outputs or adequate programming logic to temporarily deactivate fire alarm audible notification, and initiate/synchronize strobes. Provide a complete set of self-diagnostics for controller and appliance network. Provide local diagnostic information display and local diagnostic information and system event log file.

B. Cabinet:

Install control panel components in cabinets large enough to accommodate all components and also to allow ample gutter space for interconnection of panels as well as field wiring. The enclosure shall be identified by an engraved laminated phenolic resin nameplate. Lettering on the nameplate shall say "Fire Alarm and Mass Notification Control Panel" and shall not be less than one inch high. Provide permanent identification plates for lamps, circuits, meters, fuses, and switches. The cabinet shall be provided in a sturdy steel housing, complete with back box, hinged steel door with cylinder lock, and surface mounting provisions.

C. Function Modules

Provide function modules to perform all functions of the FACP. Provide audible signals to indicate any alarm, supervisory, or trouble condition. The alarm signals shall be different from the trouble signal. Connect circuit conductors entering or leaving the panel to screw-type terminals with each terminal marked for identification. Circuits operating at 24 VDC shall not operate at less than 21.6 volts. Circuits operating at any other voltage shall not have a voltage drop exceeding 10 percent of nominal voltage.

D. Silencing Switches

a. Alarm Silencing Switch: Provide an alarm silencing switch at the FACP that shall silence the audible signal but not affect the visual alarm indicator. This switch shall be overridden upon activation of a subsequent alarm.

b. Supervisory/Trouble Silencing Switch: Provide supervisory and trouble silencing switch that shall silence the audible trouble and supervisory

signal, but not extinguish the visual indicator. This switch shall be overridden upon activation of a subsequent alarm, supervision, or trouble condition. Audible trouble indication must resound automatically every 24 hours after the silencing feature has been operated.

E. Voice Notification System

The Voice Notification System shall comply with the requirements of NFPA72 for Emergency Voice/Alarm Communications System requirements ISO 7240 -16, IEC 60268-16, except as specified herein. The system shall be a one-way multi-channel voice notification system incorporating user selectability of a minimum 8 distinct sounds for tone signaling, and the incorporation of a voice module for delivery of prerecorded messages. Textual audible appliances shall produce a slow whoop tone for three cycles followed by a voice message that is repeated until the control panel is reset or silenced. Automatic messages shall be broadcast through speakers on appropriate floors, but not in stairs or elevator cabs. In the case of a high rise building, the visual strobes and audible message shall automatically be broadcast on the floor of fire alarm origin, two floors immediately above the floor of fire alarm origin, and two floors immediately below the floor of fire alarm origin. A live voice message shall override the automatic audible output through use of a microphone input at the control panel. When using the microphone, live messages shall be broadcast through speakers in stairs, in elevator cabs, and throughout a selected floor or floors. The system shall be capable of operating all speakers at the same time.

The digitalized voice message shall consist of a non-volatile (EPROM or EEPROM) microprocessor based input to the amplifiers. The microprocessor shall actively interrogate circuitry, field wiring, and digital coding necessary for the immediate and accurate re-broadcasting of the stored voice data into the appropriate amplifier input. Loss of operating power, supervisory power, or any other malfunction that could render the digitalized voice module inoperative shall automatically cause the slow whoop tone to take over all functions assigned to the failed unit. The Mass Notification functions shall override the manual or automatic fire alarm notification or Public Address (PA) functions. The system shall have the capability of utilizing a remote microphone station with redundant controls of the notification system control panel. Class "A" Notification Appliance Circuits (NAC) shall be provided for the activation of strobe appliances.

The activation of the NAC Circuits shall follow the operation of the speaker NAC circuits. Audio output shall be selectable for 25 or 70.7 volt output. The audio amplifier outputs shall be not greater than 100 watts RMS output. The strobe NAC Circuits shall provide at least 2 amps of 24 VDC power to operate strobes and have the ability to synchronize all strobes. A hand held microphone shall be provided and, upon activation, shall take priority over any tone signal, recorded message or PA microphone operation in progress, while maintaining the strobe NAC Circuits activation. All outputs and operational modules shall be fully supervised with on-board diagnostics and trouble reporting circuits.

Form "C" contacts shall be provided for system alarm and trouble conditions. Circuits shall be provided for operation of auxiliary appliance during trouble conditions. The system shall be housed in the same panel with the fire alarm system. Mass Notification functions shall take precedence over all other function performed by the Voice Notification System.

Messages shall utilize a male or female voice and shall be similar to the following:

1) 1000 Hz tones (1 sec on, 1/2 second off, 1 second on, 1/2 second off, 1 second on) "May I have your attention, please. May I have your attention, please. A fire has been reported that may affect your floor. Please walk to the nearest exit and evacuate the building." (Provide a [2] second pause.) "May I have your attention, please...(repeat the message)."

2) 1000 Hz tones (1 sec on, 1/2 second off, 1 second on, 1/2 second off, 1 second on)"May I have your attention please. May I have your attention please. A fire emergency has been reported in the building. Please leave the building by the nearest exit or exit stairway. Do not use the elevators." (Provide a [2] second pause.) "May I have your attention please..(repeat the message)."

3) 1000 Hz tones (1 sec on, 1/2 second off, 1 second on, 1/2 second off, 1 second on) "Alert! This is the Mass Notification System. There is an emergency situation. DO NOT evacuate the building! Stay in your current location! Stay tuned for further instructions." (repeat message 2 times)

4) 1000 Hz tones (1 sec on, 1/2 second off, 1 second on, 1/2 second off, 1 second on)"Alert, This is the Mass Notification System. There is a chemical gas emergency. Turn off all HVAC equipment, seal all doors and windows with wet fabric, Don protective gear. DO NOT evacuate the building, Act now! Listen to the MNS system for further instructions" (repeat message 2 times)

5) 1000 Hz tones (1 sec on, 1/2 second off, 1 second on, 1/2 second off, 1 second on)"Alert, this is the Mass Notification System. There is an explosive blast risk along the [North/South/East/West] wall of your building. Quietly move towards the [North/South/East/West] side of the building, and exit from the [N/S/E/W] stairs. Move away from the building heading north to the north parking area. (repeat message 2 times).

F. Remote Microphone

The Remote Microphone station shall incorporate a Push-To-Talk (PTT) microphone, redundant controls and system status indicators of/for the system. The unit shall incorporate microphone override of any tone generation or prerecorded messages. The unit shall be fully supervised from the control panel. The housing shall be in an unlocked cabinet or a break glass type cabinet.

Auxiliary Input Module shall be designed to be an outboard expansion module to either expand the number of optional remote microphone stations, or allow a telephone interface.

G. AMPLIFIERS, PREAMPLIFIERS, TONE GENERATORS

1. General

Any preamplifiers, tone generators, digitalized voice generators, and other hardware necessary for a complete, operational, textual audible circuit conforming to NFPA 72 shall be housed in the fire alarm control unit or in the case of distributed amplifiers throughout a facility, an approved fire alarm control enclosure. The system shall automatically operate and control all building fire alarm speakers except those installed in the stairs and within elevator cabs. The speakers in the stairs and elevator cabs shall operate only when the microphone is used to deliver live messages. Each amplifier shall be single output channel.

2. Construction

Amplifiers shall utilize computer grade solid state components and shall be provided with output protection devices sufficient to protect the amplifier against any transient up to 10 times the highest rated voltage in the system.

3. Inputs

Each system shall be equipped with separate inputs from the tone generator, digitalized voice driver and panel mounted microphone. Microphone inputs shall be of the low impedance, balanced line type. Both microphone and tone generator input shall be operational on any amplifier.

4. Tone Generator

The tone generator shall be of the modular, plug-in type with securely attached labels to identify the component as a tone generator and to identify the specific tone it produces. The tone generator shall produce a slow whoop tone, that shall slowly ascend from low (500 hertz) to high (1200 hertz), and shall be constantly repeated until interrupted by either the digitalized voice message, the microphone input, or the alarm silence mode as specified. Each slow whoop cycle shall last approximately 4 seconds. The tone generator shall be single channel with an automatic backup generator per channel such that failure of the primary tone generator causes the backup generator to automatically take over the functions of the failed unit and also causes transfer of the common trouble relay.

5. Protection Circuits

Each amplifier shall be constantly supervised for any condition that could render the amplifier inoperable at its maximum output. Failure of any component shall cause automatic transfer to a designated backup amplifier,

illumination of a visual "amplifier trouble" indicator on the control panel, appropriate logging of the condition on the system printer, and other actions for trouble conditions as specified.

2.9 SYSTEM COMPONENTS:

A. Initiating devices not otherwise specified on the drawings are to be individually addressable devices residing on a signaling line circuit (SLC).

B. Alphanumeric LCD Type Annunciator:

1. The alphanumeric display annunciator shall be a supervised, remotely located back-lit LCD display containing a minimum of eighty (80) characters for alarm annunciation in clear English text.
2. LCD annunciator shall display system alarm and trouble conditions.
3. Audible indication of alarm shall be integral to alphanumeric display.
4. The display shall be UL listed for fire alarm application.
5. It shall be possible to connect up to 32 LCD displays and be capable of wiring distances up to 6,000 feet from the control panel.
6. The annunciator shall connect to a separate, dedicated "terminal mode" EIA-485 interface. This is a two-wire loop connection and shall be capable of distances to 6,000 feet. Each terminal mode LCD display shall mimic the main control panel.
7. System shall allow a minimum of 32 terminal mode LCD annunciators. Up to 10 LCD annunciators shall be capable of the following system functions: Acknowledge, Signal Silence and Reset, which shall be protected from unauthorized use by a keyswitch or password.
8. The LED annunciator shall offer an interface to a graphic style annunciator and provide each of the features listed above.

C. All interfaces and associated equipment are to be protected so that they will not be affected by voltage surges or line transients consistent with UL standard 864.

D. Fire Network Adaptor (FNA):

Provide a Honeywell Fire Network Adapter (FNA) that is compatible with the existing Honeywell Enterprise Building Integrator Life Safety System (EBI LSM) supervising station fire alarm system. The FNA shall transmit alarms, supervisory and trouble conditions via the base LAN/WAN. The FNA shall allow two-way communication for Mass Notification from the EBI LSM to the XLS-140 DVC and vice-versa. The FNA shall be UL864 UOJZ listed for use with the XLS-140 DVC. The FNA shall have a source of power for operation that conforms to NFPA 72

The following signals shall be transmitted to the Honeywell EBI Base Receiving Station via the FNA:

a. Sprinkler water flow
b. Manual pull stations
c. Smoke detectors

d. Duct smoke detectors
e. Sleeping room smoke detectors
f. Heat detectors
g. Fire Extinguishing System
h. Sprinkler valve supervision
i. Fire pump running
j. Fire pump supervision
k. Water supply level and temperature
l. FACP Tamper switch
m. Combustion Engine Drive Fire Pump Running
(1) Selector Switch in position than automatic
(2) Engine Over-speed
(3) Low Fuel
(4) Low Battery
(5) Engine Trouble (Low Oil, Over temp, etc)

E. Radio Transmitter and Interface Panels

A Monaco BT-XF radio transmitter or King Fisher radio transmitter shall be provided that is compatible with the Fort Gordon supervising station receiving equipment. Each radio alarm transmitter shall be the manufacturer's recognized commercial product, completely assembled, wired, factory tested, and delivered ready for installation and operation. Transmitters shall be provided in accordance with applicable portions of NFPA 72, Federal Communications Commission (FCC) 47 CFR 90 and Federal Communications Commission (FCC) 47 CFR 15. Transmitter electronics module shall be contained within the physical housing as an integral, removable assembly. The proprietary supervising station receiving equipment is and the transceiver shall be fully compatible with this equipment. The transmitter shall be Narrowband radio, with FCC certification for narrowband operation and meets the requirements of the NTIA (National Telecommunications and Information Administration) Manual of Regulations and Procedures for Federal Frequency Management.

a. Operation: Each transmitter shall operate from 120-volt ac power. In the event of 120-volt ac power loss, the transmitter shall automatically switch to battery operation. Switchover shall be accomplished with no interruption of protective service, and shall automatically transmit a trouble message. Upon restoration of ac power, transfer back to normal ac power supply shall also be automatic.

b. Battery Power: Transmitter standby battery capacity shall provide sufficient power to operate the transmitter in a normal standby status for a minimum of 72 hours and be capable of transmitting alarms during that period.

c. Transmitter housing shall be NEMA Type 1. The housing shall contain a lock that is keyed identical to radio alarm transmitter housings on the base. Radio alarm transmitter housing shall be factory painted with a suitable priming coat and not less than two coats of hard durable weatherproof enamel.

d. Antenna shall be omni-directional for radio alarm transmitters with a driving point impedance to match transmitter output. The antenna and antenna mounts shall be corrosion resistant and designed to withstand wind velocities of 100 mph. Antennas shall not be mounted to any portion of the building roofing system. Protect the antenna from physical damage. Signals to Be Transmitted to the Monaco D-21 Receiving Station via the building radio transmitter:

The following signals shall be sent to the D-21 base receiving station:

a. Sprinkler water flow
b. Manual pull stations
c. Smoke detectors
d. Duct smoke detectors
e. Sleeping room smoke detectors
f. Heat detectors
g. Fire Extinguishing System
h. Sprinkler valve supervision
i. Fire pump running
j. Fire pump supervision
k. Water supply level and temperature
l. Combustion Engine Drive Fire Pump Running
(1) Selector Switch in position than automatic
(2) Engine Over-speed
(3) Low Fuel
(4) Low Battery
(5) Engine Trouble (Low Oil, Over temp, etc)

F. Field Wiring Terminal Blocks: For ease of service all panel I/O wiring terminal blocks shall be removable, plug-in types and have sufficient capacity for #18 to #12 AWG wire. Terminal blocks that are permanently fixed are not acceptable.

2.10 SYSTEM COMPONENTS - ADDRESSABLE INITIATING DEVICES

Note: Refer to drawings for the specific addressable device types required. All initiating devices are to be individually addressable, unless otherwise specified on the drawings.

A. Addressable Devices - General

1. Addressable devices shall use simple to install and maintain decade, decimal address switches. Devices shall be capable of being set to an address in a range of 001 to 159.
2. Addressable devices, which use a binary-coded address setting method, such as a DIP-switch, are not an allowable substitute due to increased risk of error and special knowledge required for maintenance.

3. Detectors shall be intelligent (analog) and addressable, and shall connect to the fire alarm control panel Signaling Line Circuits.
4. Addressable smoke and thermal detectors shall provide dual alarm and power/polling LEDs. LEDs shall flash green under normal conditions, indicating that the detector is operational and in regular communication with the control panel, and both LEDs shall be placed into steady red illumination by the control panel, indicating that an alarm condition has been detected. If required, the LED flash shall have the ability to be removed from the system program. An output connection shall also be provided in the base to connect an external remote alarm LED.
5. The fire alarm control panel shall permit detector sensitivity adjustment through field programming of the system. The panel on a time-of-day basis shall automatically adjust sensitivity.
6. Using software in the FACP, detectors shall compensate for dust accumulation and other slow environmental changes that affect their performance. Detectors shall be listed by UL as meeting the calibrated sensitivity test requirements of NFPA Standard 72, Chapter 10 (2007).
7. The detectors shall be ceiling-mount and shall include a separate twist-lock base with tamper proof feature. Bases shall include a sounder base with a built-in (local) sounder rated at 85 DBA minimum, a relay base and an isolator base designed for Style 7 applications.
8. The detectors shall provide a test means whereby they will simulate an alarm condition and report that condition to the control panel. Such a test may be initiated at the detector itself or initiated remotely on command from the control panel.
9. Detectors shall store an internal identifying type code that the control panel shall use to identify the type of device (ion, photo, thermal).
10. Detectors will operate in an analog fashion, where the detector simply measures its designed environment variable and transmits an analog value to the FACP based on real-time measured values. FACP software, not the detector, shall make the alarm/normal decision, permitting the sensitivity of each detector to be set in the FACP program and allowing the system operator to view the current analog value of each detector.
11. A magnetic test switch shall be provided to test detectors and modules. Detectors shall report an indication of an analog value reaching 100% of the alarm threshold.
12. Addressable modules shall mount in a 4-inch square (101.6 mm square), 2-1/8 inch (54 mm) deep electrical box. An optional surface mount Lexan enclosure shall be available.

B. Addressable Manual Fire Alarm Box (manual station)

1. Addressable manual Single Action fire alarm boxes shall, on command from control panel, send data to the panel representing the status of the manual switch and addressable communication module. They shall use a key operated test-reset lock, and be designed so that after actual emergency operation, they cannot be restored to normal use except by the use of a key.

2. All operated stations shall have a positive, visual indication of operation and utilize a key type reset.
3. Manual fire alarm boxes shall be constructed of Lexan with clearly visible operating instructions provided on the cover. The word FIRE shall appear on the front of the stations in raised letters, 1.75 inches (44 mm) or larger
4. Manual Stations shall be mounted 48” AFF.

C. Intelligent Photoelectric Smoke Detector
1. The detectors shall use the photoelectric (light-scattering) principal to measure smoke density and shall, on command from the control panel, send data to the panel representing the analog level of smoke density.
2. Full smoke detection is required throughout all spaces regardless of whether the facility contains sprinklers or not.

D. Intelligent Laser Photo Smoke Detector
1. The intelligent laser photo smoke detector shall be a spot type detector that incorporates an extremely bright laser diode and an integral lens that focuses the light beam to a very small volume near a receiving photo sensor. The scattering of smoke particles shall activate the photo sensor.
2. The laser detector shall have conductive plastic so that dust accumulation is reduced significantly.
3. The intelligent laser photo detector shall have nine sensitivity levels and be sensitive to a minimum obscuration of 0.03 percent per foot.
4. Laser detector shall not require conduit, special fittings or PVC pipe.
5. The intelligent laser photo detector shall support standard, relay, isolator and sounder detector bases.
6. Laser photo detector shall not require cleaning requirements other than those listed in NFPA 72. Replacement, refurbishment or specialized cleaning of the detector head shall not be required.
7. Laser photo detector shall include two bicolor LEDs that flash green in normal operation and turn on steady red in alarm.

E. Intelligent Ionization Smoke Detector: Detectors shall use the dual-chamber ionization principal to measure products of combustion and, on command from the control panel, send data to the panel representing the analog level of products of combustion.

F. Intelligent Multi Criteria Self-Acclimating Detector
1. Intelligent multi criteria Acclimate detector shall be an addressable device that is designed to monitor a minimum of photoelectric and thermal technologies in a single sensing device. Design shall include the ability to adapt by utilizing a built-in microprocessor to determine its environment and choose the appropriate sensing settings. Detector design shall permit a sensitivity window, no less than 1 to 4% per foot obscuration.
2. Microprocessor design shall be capable of selecting the appropriate sensitivity levels based on the environment type it is in (office,

manufacturing, kitchen etc.) and then have the ability to automatically change the setting as the environment changes (as walls are moved or as the occupancy changes).

3. Intelligent multi criteria detection device shall include the ability to combine the signal of the thermal sensor with the signal of the photoelectric signal in an effort to react quickly in the event of a fire situation. It shall also include the inherent ability to distinguish between a fire condition and a false alarm condition by examining the characteristics of the thermal and smoke sensing chambers and comparing them to a database of actual fire and deceptive phenomena.

G. Intelligent Thermal Detectors: Thermal detectors shall be intelligent addressable devices rated at 135 degrees Fahrenheit (58 degrees Celsius) and have a rate-of-rise element rated at 15 degrees F (9.4 degrees C) per minute. It shall connect via two wires to the fire alarm control panel signaling line circuit.

H. Intelligent Duct Smoke Detector

1. Smoke detector housing shall accommodate either an intelligent ionization detector or an intelligent photoelectric detector that provides continuous analog monitoring and alarm verification from the panel.
2. When sufficient smoke is sensed, an alarm signal is initiated at the FACP, and appropriate action taken to change over air handling systems to help prevent the rapid distribution of toxic smoke and fire gases throughout the areas served by the duct system.

I. Hostile-Environment Area Smoke Detector

1. Detector shall be designed to provide early warning smoke detection in environments where traditional smoke detectors are not practical.
2. Detector shall have a filter system to remove particles down to 25 microns.
3. Filter system shall remove unwanted airborne particles and water mist. This shall allow the detector to operate in environments where traditional smoke detectors would have nuisance alarms.
4. Filter system shall consist of 2 filters one of which is field replaceable.
5. The filter system shall have an intake fan to draw air and smoke through the filters into the sensing chamber.
6. The filter system shall be supervised so that if the filter is clogged or the fan fails the control panel reports trouble.
7. Filter system shall be powered from 24 VDC separate from the SLC communications.
8. The detector shall utilize a photoelectric sensing chamber.

J. Addressable Dry Contact Monitor Module

1. Addressable monitor modules shall be provided to connect one supervised IDC zone of conventional alarm initiating devices (any N.O. dry contact device) to one of the fire alarm control panel SLCs.

2. The IDC zone must be Class A. LEDs shall be provided that shall flash under normal conditions, indicating that the monitor module is operational and in regular communication with the control panel.
3. For difficult to reach areas, the monitor module shall be available in a miniature package and shall be no larger than 2-3/4 inch (70 mm) x 1-1/4 inch (31.7 mm) x 1/2 inch (12.7 mm). This version need not include Style D or an LED.

K. Two Wire Detector Monitor Module
1. Addressable monitor modules shall be provided to connect one supervised IDC zone of conventional 2-wire smoke detectors or alarm initiating devices (any N.O. dry contact device).
2. The IDC zone must be wired for Class A operation. An LED shall be provided that shall flash under normal conditions, indicating that the monitor module is operational and in regular communication with the control panel.

L. Addressable Control Module
1. Addressable control modules shall be provided to supervise and control the operation of one conventional NACs of compatible, 24 VDC powered, polarized audio/visual notification appliances.
2. The control module NAC may be wired for Class A with up to 1 amp of inductive A/V signal, or 2 amps of resistive A/V signal operation.
3. Audio/visual power shall be provided by a separate supervised power circuit from the main fire alarm control panel or from a supervised UL listed remote power supply.
4. The control module shall be suitable for pilot duty applications and rated for a minimum of 0.6 amps at 30 VDC.

M. Addressable Relay Module:
Addressable Relay Modules shall be available for HVAC control and other building functions. The relay shall be form C and rated for a minimum of 2.0 Amps resistive or 1.0 Amps inductive. The relay coil shall be magnetically latched to reduce wiring connection requirements, and to insure that 100% of all auxiliary relay or NACs may be energized at the same time on the same pair of wires.

N. Isolator Module
1. Isolator modules shall be provided to automatically isolate wire-to-wire short circuits on an SLC Class A branch. The isolator module shall limit the number of modules or detectors that may be rendered inoperative by a short circuit fault on the SLC loop segment or branch. At least one isolator module shall be provided for each 10 devices or protected zone of the building.
2. If a wire-to-wire short occurs, the isolator module shall automatically open-circuit (disconnect) the SLC. When the short circuit condition is corrected, the isolator module shall reconnect the isolated section.

3. The isolator module shall not require address-setting, and its operations shall be totally automatic. It shall not be necessary to replace or reset an isolator module after its normal operation.
4. The isolator module shall provide a single LED that shall flash to indicate that the isolator is operational and shall illuminate steadily to indicate that a short circuit condition has been detected and isolated.

O. Valve Monitor Switches (Tamper Switches)
Provide a tamper switch for each fire protection system control valve. Tamper switches shall be UL listed as "Extinguishing System Attachment" for the location and type of valve supervised. The device shall contain double pole, double throw contacts. Operation of the switch shall cause a supervisory signal to be transmitted to the FACP upon not more than two complete turns of the valve wheel or a closure of 10 percent, whichever is less. Tamper switches shall be equipped with screw terminals for each conductor. Tamper switches shall be provided and installed by the fire suppression/sprinkler contractor.

P. Waterflow Detectors
a. Provide vane type waterflow detectors for wet pipe sprinkler systems. The device shall contain double pole, double throw contacts. Equip the detector with a pneumatic time delay, field adjustable from 0 to 90 seconds. The time delay shall be set initially to 30 seconds. The device shall be a UL listed extinguishing system attachment rated for the particular pressure and location that it is installed. Flow switches shall be equipped with screw terminals for each conductor. Vane type waterflow detectors shall be provided and installed by the fire suppression/sprinkler contractor.

b. Provide pressure type waterflow detectors for dry pipe sprinkler systems, pre-action, and deluge systems. Switch shall be equipped with equipped to provide a time delay from 0 to 90 second. The device shall contain double pole, double throw contacts. The device shall be a UL listed extinguishing system attachment rated for the particular pressure and location that it is installed. Switch shall be equipped with screw terminals for each conductor. Pressure type waterflow detectors shall be provided and installed by the fire suppression/sprinkler contractor.

Q. Low Air Detectors
a. Provide pressure type low air detectors for dry pipe sprinkler systems and pre-action, sprinkler systems. Switch shall be equipped with equipped to provide a time delay from 0 to 90 second. The device shall contain double pole, double throw contacts. The device shall be a UL listed extinguishing system attachment rated for the particular pressure and location that it is installed. Switch shall be equipped with screw terminals for each conductor. Pressure type low air detectors shall be provided and installed by the fire suppression/sprinkler contractor.

U. Electromagnetic Door Holders

Where indicated on the drawings, provide magnetic fire door hold open devices. The electromagnetic holding devices shall be designed to operate on 24 VDC from the fire alarm system. Under normal conditions, the magnets shall attract and hold the doors open. The initiation of any fire alarm shall cause the release of the electromagnetic door holding device permitting the door to be closed by the door closer. Operation shall be fail safe with no moving parts. Electromagnetic door hold-open devices shall not be required to be held open during building power failure. The device shall be UL listed based on UL 228 tests.

2.11 NOTIFICATION APPLIANCES

A. Fire Alarm/Mass Notification Speakers

Audible appliances shall conform to the applicable requirements of UL 464. Appliances shall be connected into notification appliance circuits. Audible appliances shall generate a unique audible sound from other devices provided in the building and surrounding area. Surface mounted audible appliances shall be painted red. Recessed audible appliances shall be installed with a grill that is painted red.

a. Speakers shall conform to the applicable requirements of UL 1480. Speakers shall have six different sound output levels and operate with audio line input levels of 70 Vac and 25 Vac, by means of selectable tap settings. Tap settings shall include taps of 1/4, 1/2, 1 and 2 watts. Speakers shall incorporate a high efficiency speaker for maximum output at minimum power across a frequency range of 400Hz to 4000Hz, and shall have a sealed back construction. Speakers shall be capable of installation on standard 4 inch square electrical boxes. Where speakers and strobes are provided in the same location, they may be combined into a single unit. All inputs shall be polarized for compatibility with standard reverse polarity supervision of circuit wiring via the Fire Alarm Control Panel Voice Notification System.

b. Provide speaker mounting plates constructed of cold rolled steel having a minimum thickness of 16 gauge and equipped with mounting holes and other openings as needed for a complete installation. Fabrication marks and holes shall be ground and finished to provide a smooth and neat appearance for each plate. Each plate shall be primed and painted.

B. Visual Notification Appliances

Visual notification appliances shall conform to the applicable requirements of UL 1971 and conform to the Americans with Disabilities Act (ADA). The notifications appliances shall comply with UL 1638. Fire Alarm Notification Appliances shall have clear high intensity optic lens, xenon flash tubes, and output white light. Fire Alarm/Mass Notification Appliances shall have high intensity optic lens, xenon flash tubes, and output white light and be marked "ALERT" in red letters. The light pattern shall be disbursed so that it is visible above and below the strobe and from a 90 degree angle on both sides of the strobe. Strobe flash rate shall be 1 flash per second and a minimum of 15

candela based on the UL 1971 test. Where more than two appliances are located in the same room or corridor, provide synchronized operation.

2.12 BATTERIES

A. The battery shall have sufficient capacity to power the fire alarm system for not less than twenty-four hours plus 15 minutes of alarm upon a normal AC power failure. Substantiate the battery calculations for alarm, alert, and supervisory power requirements. Ampere-hour requirements for each system component and each panel component, and the battery-recharging period shall be included.

B. The batteries are to be completely maintenance free. No liquids are required. Fluid level checks for refilling, spills, and leakage shall not be required. These sealed, maintenance-free, sealed lead acid or gel cell batteries will be the source for emergency power to the FACP. Batteries shall contain suspended electrolyte. The battery system shall be maintained in a fully charged condition by means of a solid state battery charger. An automatic transfer switch will transfer the load to the batteries in the event of the failure of primary power.

C. If necessary to meet standby requirements, external battery and charger systems may be used if they are UL Listed with the system.

D. The system shall provide a means of monitoring the battery voltages from the front panel display for the local batteries.

E. Battery Charger: A solid state, fully automatic, variable charging rate battery charger with capability of providing all necessary power for the connected system load and shall maintain the batteries at full charge. In the event the batteries are fully discharged (18 Volts dc), the charger shall recharge the batteries back to 95 percent of full charge within 48 hours. Provide pilot light to indicate when batteries are manually placed on a high rate of charge as part of the unit assembly if a high rate switch is provided

SECTION 28 31 76

PART 3 EXECUTION

2.13 SECTION INCLUDES

A. 2.14 Examination

B. 2.15 Protection

C. 2.16 Coordination

D. 2.17 Installation

E. 2.18 Field Quality Control

F. 2.19 Existing Equipment

G. 2.20 Conductors

H. 2.21 Conduit Raceway

I. 2.22 Communication Wiring

J. 2.23 Fiber Optic Cable System

K. 2.24 Programming

L. 2.25 Life Safety System Checkout and Testing

M. 2.26 Life Safety System Demonstration and Acceptance

N. 2.27 Cleaning

O. 2.28 Training – 8 Hours of training shall be provided on the operations and maintenance of the installed equipment. The contractor shall provide a certificate of completion to each attendee. The training will be coordinated with the DPW Operations & Maintenance Branch and will be provided on site.

2.14 EXAMINATION

A. Project plans shall be thoroughly examined for control device and equipment locations. Any discrepancies, conflicts, or omissions shall be reported to the Architect and Engineer for resolution before rough-in work is started.

B. Contractor shall inspect the site to verify that equipment may be installed as shown. Any discrepancies, conflicts, or omissions shall be reported to the Engineer for resolution before rough-in work is started.

C. Contractor shall examine the drawings and specifications for other parts of the work. If head room or space conditions appear inadequate—or if any discrepancies occur between the plans and the contractor's work, and the plans and the work of others—the contractor shall report these discrepancies to the Engineer and shall obtain written instructions for any changes necessary to accommodate the contractor's work with the work of others. Any changes in the work covered by this Specification made necessary by the failure or neglect of the contractor to report such discrepancies shall be made by—and at the expense of—this contractor.

2.15 PROTECTION

A. Contractor shall protect all work and material from damage from its work or employees, and shall be liable for all damages thus caused.

B. Contractor shall be responsible for its work and equipment until finally inspected, tested, and accepted. Contractor shall protect any material that is not immediately installed. Contractor shall close all open ends of work with temporary covers or plugs during storage and construction to prevent entry of foreign objects.

2.16 COORDINATION

A. Site:
1. Where the electrical work will be installed in close proximity to, or will interfere with the work of, other trades, the contractor shall assist in working out space conditions to make a satisfactory adjustment. If the contractor installs its work before coordinating with other trades, so as to cause any interference with the work of other trades, the contractor shall make the necessary changes in its work to correct the condition without extra charge.
2. Contractor shall coordinate and schedule work with all other work in the same area, or with work that is dependent upon other work, to facilitate mutual progress.

B. Submittals: Refer to "Submittals" Article in Part 1 of this specification for requirements.

2.17 INSTALLATION

A. In order to maintain the highest consistent installation quality with the Fire Alarm / Mass Notification installation, the site Electrician shall only be responsible for the installation of conduit under the direction the Fire Alarm installation contractor. The installation of fire alarm cable, mounting and termination of devices, mounting and termination of the FACP/DVC, as well as the programming and testing of the system shall be by the factory Fire Alarm installation contractor. Any deviation from the Fire Alarm installers

qualification requirements listed above must be approved in writing by the DPW Authority Having Jurisdiction.

B. Installation shall be in accordance with the NEC, NFPA 72, UFC 3-600-01, UFC 4-021-01, and as recommended by the major equipment manufacturer's installation manuals, shop drawings, and wiring diagrams.

C. Conduit, junction boxes, conduit supports, and hangers shall be concealed in finished areas and may be exposed in unfinished areas. Smoke detectors shall not be installed prior to the system programming and test period. If construction is ongoing during this period, measures shall be taken to protect smoke detectors from contamination and physical damage.

D. Any shorts, opens, or grounds found on new or existing wiring shall be corrected prior to the connection of these wires to any panel component or field device.

E. Contractor shall neatly tie-wrap all field-wiring conductors in the gutter spaces of the control panels and secure the wiring away from all circuit boards and control equipment components. Field-wiring circuits shall be neatly and legibly labeled in the control panel. No wiring except home runs from Life Safety System circuits and system power supply circuits shall be permitted in the control panel enclosures. No wiring splices shall be permitted in any control panel enclosure.

F. Equipment shall be attached to walls, ceiling and floor assemblies and shall be mounted firmly in place. Detectors shall not be supported solely by suspended ceilings. Fasteners and supports shall be sized to support the required load.

G. Fire detection and alarm system devices, control panels, and remote annunciators shall be flush-mounted when located in finished areas and may be surface-mounted when located in unfinished areas.

H. Manual fire alarm boxes shall be suitable for surface mounting or semi-flush mounting as shown on the plans, and shall be installed not less than 42 inches, nor more than 48 inches above the finished floor.

I. Control panels shall be identified with minimum 1/2" letters on laminated plastic nameplates.

J. Manufacturers' nameplates and UL or CSA labels are to be visible and legible after equipment is installed.

K. Identifiers shall match record documents.

L. Penetration of floor slabs and fire resistance rated walls/ceilings shall be fire stopped in accordance with all local fire codes.

2.18 FIELD QUALITY CONTROL

A. All work, materials, and equipment shall comply with the rules and regulations of applicable NFPA, UFC 3-600-01, UFC 4-021-01, local, state, and federal codes and ordinances as identified in Part 1 of this Specification.

B. Contractor shall continually monitor the field installation for code compliance and quality workmanship.

2.19 EXISTING EQUIPMENT

A. Wiring: The contractor may not reuse any abandoned wires. The integrity of the wire and its proper application to the installation is the responsibility of the contractor. The wire shall be properly identified and tested as per this Specification. Unused or redundant wiring shall be properly identified as such.

B. Local Life Safety control panels: Contractor may not reuse any existing local control panel to locate new equipment. All redundant equipment within these panels shall be removed. Panel face cover shall be patched to fill holes caused by removal of unused equipment, or replaced with new. Salvage, recondition, and reuse of existing devices and cabinets as noted.

C. Install Life Safety control panels where shown.

D. Patch holes and finish to match existing.

2.20 CONDUCTORS

A. The requirements of this section apply to all system conductors, including all signaling line, initiating devices, notification appliances, auxiliary functions, remote signaling, AC and DC power and grounding/shield drain circuits, and any other wiring installed by the contractor pursuant to the requirements of these Specifications.

B. Wiring shall be in accordance with local, state and national codes (e.g., NEC Article 760) and as recommended by the manufacturer of the fire alarm system. Number and size of conductors shall be as recommended by the fire alarm system manufacturer, but not less than 18 AWG (1.02 mm) for Initiating Device Circuits and Signaling Line Circuits, and 14 AWG (1.63 mm) for Notification Appliance Circuits.

C. New wiring shall be installed in conduit or raceway. Existing cable and wiring may be re-used, providing they meet the manufacturer's published wiring requirements.

D. Initiating circuit, signaling line circuit, AC power conductors, shield drain conductors, and grounding conductors shall be solid copper or stranded or bunch tinned (bonded) stranded copper.

E. Signaling line circuits, including all addressable initiating device circuits, shall be 18 AWG minimum multi-conductor jacketed twisted cable, twisted shielded, or as per manufacturer's requirements and shall be plenum/ fire rated..

F. Non-addressable initiating device circuits, 24 VDC auxiliary function circuits shall be 18 AWG minimum or per manufacturer's requirements.

G. Notification appliance circuit conductors shall be solid copper or bunch tinned (bonded) stranded copper. Where stranded conductors are used, a maximum of 7 strands shall be permitted for No. 16 and No. 18 conductors, and a maximum of 19 strands shall be permitted for No. 14 and larger conductors.

H. Audible notification appliance circuits shall be 14 AWG minimum twisted pairs, twisted pairs shielded, or per manufacturer's requirements.

I. Visual notification appliance circuits shall be 14 AWG minimum THHN, twisted pairs, twisted shielded pairs, or per manufacturer's requirements.

J. All wire and cable shall be listed and approved by a recognized testing agency for use with a protective signaling system.

2.21 CONDUIT RACEWAY

A. Conduit shall be in accordance with the National Electrical Code (NEC), local and state requirements.

B. Systems and system components listed to UL864 Control Units for Fire Protective Signaling Systems may be installed within a common conduit raceway system, in accordance with the manufacturer's recommendations. System(s) or system components not listed to the UL864 standard shall utilize a separate conduit raceway system for each of the subsystems.

C. All wiring shall be installed in conduit or raceway. Conduit fill shall not exceed 40 percent of interior cross sectional area where three or more cables are contained within a single conduit.

D. Cable must be separated from any open conductors of power, or Class 1 circuits, and shall not be placed in any conduit, junction box or raceway containing these conductors, per NEC Article 760.

E. Wiring for 24-volt DC control, alarm notification, emergency communication and similar power-limited auxiliary functions may be run in the same conduit as initiating and signaling line circuits. All circuits shall be provided with transient suppression devices and the system shall be designed to permit simultaneous operation of all circuits without interference or loss of signals.

F. System conduits shall be EMT, 3/4 -inch minimum, except for flexible metallic conduits used for whips to devices only, maximum length—6 feet, minimum diameter—3/4 inch.

G. System conduits, which are installed in areas that may be subject to physical damage or weather, shall be IMC or rigid steel, 3/4 -inch minimum.

H. Conduits shall be sized according to the conductors contained therein. Cross-sectional area percentage fill for system conduits shall not exceed 40 percent.

I. Provide new conduit raceway and conduit riser.

J. [Existing conduit raceway system may be re-used where possible.]

K. Fire alarm conduit systems shall be routed and installed to minimize the potential for physical, mechanical, or fire damage; to facilitate service and minimize maintenance; and so as not to interfere with existing building systems, facilities, or equipment.

L. Conduits, except flexible conduit whips to devices, shall be solidly attached to building structural members, ceiling slabs, or permanent walls. Conduits shall not be attached to existing conduit, duct work, cable trays, other ceiling equipment, drop ceiling hangers and grids, or partition walls, except where necessary to connect to initiating, notification, or auxiliary function devices.

M. System conduits, junction boxes, pull boxes, terminal cabinets, electrical enclosures, and device back boxes shall be readily accessible for inspection, testing, service, and maintenance.

2.22 COMMUNICATION WIRING

A. Follow manufacturer’s installation recommendations for all communication cabling.

B. Do not install communication wiring in raceway and enclosures containing Class 1 or other Class 2 wiring.

C. Wiring used for the multiplex communication circuit (SLC) shall be twisted and unshielded and support a minimum wiring distance of 12,500 feet. The design of the system shall permit use of IDC and NAC wiring in the same conduit with the SLC communication circuit

D. Maximum pulling, tension, and bend radius for cable installation as specified by the cable manufacturer shall not be exceeded during the installation.

E. Contractor shall verify the integrity of the entire network following the cable installation. Use appropriate test measures for each particular cable.

F. When a cable enters or exits a building, a lightning arrestor shall be installed between the lines and ground. Lightning arrestor shall be installed according to the manufacturer's instructions.

G. Runs of communication wiring shall be unspliced lengths when that length is commercially available.

H. Communication wiring shall be labeled to indicate origination and destination data.

I. Grounding of coaxial cable shall be in accordance with NEC regulations Article on Communication Circuits, Cable and Protector Grounding.

J. Terminal Boxes, Junction Boxes and Cabinets shall be UL listed for their use and purpose.

K. Initiating circuits shall be arranged to serve like categories (manual, smoke, waterflow). Mixed category circuitry shall not be permitted except on signaling line circuits connected to intelligent reporting devices.

L. The fire alarm control panel shall be connected to a separate dedicated branch circuit, maximum 20 amperes. This circuit shall be labeled at the main power distribution panel as FIRE ALARM. Fire alarm control panel primary power wiring shall be 12 AWG. The control panel cabinet shall be grounded securely to either a cold water pipe or grounding rod.

2.23 FIBER OPTIC CABLE SYSTEM

A. Maximum pulling tensions as specified by the cable manufacturer shall not be exceeded during installation. Post-installation residual cable tension shall be within the cable manufacturer's specifications.

B. All cabling and associated components shall be installed in accordance with manufacturer's instructions. Minimum cable and unjacketed fiber bend radii as specified by cable manufacturer shall be maintained.

2.24 PROGRAMMING

A. Provide sufficient internal memory for the specified sequences of operation and devices provided. There shall be a minimum of 50% of available memory free for future use.

B. Point naming and point value: System point names and values shall be of sufficient size to allow flexibility in design, allowing easy operator interface without the use of a written point index or cryptic alphanumeric shorthand.
   1. Point IDs are used to designate the location of points within the building, such as mechanical room, wing, or level—or the building itself in a multi-building environment. Point IDs shall be a minimum of 40 characters in length.

2. Point descriptors shall be a minimum of 132 characters.
3. Point state shall be a minimum of eight characters in length.
4. Point engineering units shall be a minimum of six characters in length.
5. Point values shall be a minimum of 15 characters in length with a variable decimal point.

C. Operator interface

1. Standard graphics. Provide graphics for Life Safety devices and locate on floor plans of the building. Point information on the graphic displays shall dynamically update. Show on each graphic all input and output points for the system. Show relevant calculated points if required by specifications.
2. The Contractor shall provide all labor necessary to install, initialize, start up, and troubleshoot all operator interface software and their functions as described in this section. This includes any operating system software, the operator interface database, and any third-party software installation and integration required for successful operation of the operator interface.

2.25 SYSTEM CHECKOUT AND TESTING

A. The service of a competent, factory-trained engineer or technician authorized by the AHJ of the fire alarm equipment shall be provided to technically supervise and participate during all of the adjustments and tests for the system. All testing shall be in accordance with NFPA 72, Chapter 10. The fire alarm contractor shall provide all equipment and manpower to perform checkout and testing.

1. Before energizing the cables and wires, check for correct connections and test for short circuits, ground faults, continuity, and insulation.
2. Close each sprinkler system flow valve and verify proper supervisory alarm at the FACP.
3. Verify activation of all waterflow switches.
4. Open initiating device circuits and verify that the trouble signal actuates.
5. Open and short signaling line circuits and verify that the trouble signal actuates.
6. Open and short notification appliance circuits and verify that the trouble signal actuates.
7. Ground all circuits and verify response of trouble signals.
8. Check presence and audibility of tone at all alarm notification devices.
9. Verify audible intelligibility in accordance with UFC 4-021-01.
10. Check installation, supervision, and operation of all intelligent smoke detectors using the walk test.
11. Introduce on the system each of the alarm conditions that the system is required to detect. Verify the proper receipt and the proper processing of the signal at the FACP and the correct activation of the control points.
12. When the system is equipped with optional features, consult the manufacturer's manual to determine the proper testing procedures. This is intended to address such items as verifying controls performed by

individually addressed or grouped devices, sensitivity monitoring, verification functionality, and similar.

2.26 SYSTEM DEMONSTRATION AND ACCEPTANCE

A. Demonstration:

1. Prior to acceptance, the control system shall undergo a series of performance tests to verify operation and compliance with this specification. These tests shall occur after the contractor has completed the installation, started up the system, and performed its own tests.
2. The tests described in this section are to be performed in addition to the tests that the contractor performs as a necessary part of the installation, startup, and debugging process and as specified in the "Fire Detection and Suppression Systems Turnover Process" Article in Part 3 of this specification. The Engineer will be present to observe and review these tests. The Engineer shall be notified at least ten (10) days in advance of the start of the testing procedures.
3. The demonstration process shall follow that approved in Part 3: The approved checklists and forms shall be completed for all systems as part of the demonstration.
4. The contractor shall provide at least two persons equipped with two-way communication, and shall demonstrate actual field operation of each control and sensing point for all modes of operation including alarm, trouble, and power failure modes. The purpose is to demonstrate the calibration, response, and action of every point and system. Any test equipment required to prove the proper operation shall be provided by and operated by the contractor.
5. As each control input and output is checked, a log shall be completed showing the date, technician's initials, and any corrective action taken or needed.
6. Demonstrate compliance with Part 1: "System Performance." And
7. Demonstrate compliance with Sequences of Operation through all modes of operation.
8. Demonstrate complete operation of operator interface.
9. Additionally, the following items shall be demonstrated:
   a. Interface to the building management system (if implemented).
   b. Any device supplied by others but connected to Life Safety Management System shall be checked out and commissioned by the supplier and verification of interface interoperability shall be by this contractor.
10. Any tests that fail to demonstrate the operation of the system shall be repeated at a later date. The Contractor shall be responsible for any necessary repairs or revisions to the hardware or software to successfully complete all tests.

B. Acceptance:

1. All tests described in this specification shall have been performed to the satisfaction of Director of Public Works prior to the acceptance of the

fire alarm and mass notification control system as meeting the requirements of Completion. . Such tests shall then be performed as part of the warranty.

2. The system shall not be accepted until all forms and checklists completed as part of the demonstration are submitted and approved as required in Part 3.

2.27 CLEANING

A. The Contractor shall clean up all debris resulting from its activities daily. The Contractor shall remove all cartons, containers, and crates under its control as soon as their contents have been removed. Waste shall be collected and placed in a designated location.

B. At the completion of work in any area, the Contractor shall clean all of its work and equipment, keeping it free from dust, dirt, and debris.

C. At the completion of work, all equipment furnished under this section shall be checked for paint damage, and any factory-finished paint that has been damaged shall be repaired to match the adjacent areas. Any cabinet or enclosure that has been deformed shall be replaced with new material and repainted to match the adjacent areas.

2.28 TRAINING – 8 hours of training shall be provided to the operations and maintenance personnel. Training outline shall be submitted to the DPW O&M Branch for approval. All training will be coordinated with the DPW O&M Branch and a 2 week notice shall be provided.

END OF SECTION

APPENDIX II

Building 29715 Decorative EIFS window/ door surrounds

(Added by RFPLetter_R3)

Barracks 29715 EIFS Window/Door Surrounds with Pre-cast Window Sill

EIFS Detail

APPENDIX JJ

PROJECT SIGN

ARRA PROJECT SIGN

The graphic format tor this 4' x 6' sign panel shall follows the legend guidelines and layout as specified for the standard project sign except as noted. For projects funded under American Recovery and Reinvestment Act an ARRA decal or painted shall be placed on the lower left side of the sign panel as illustrated below.

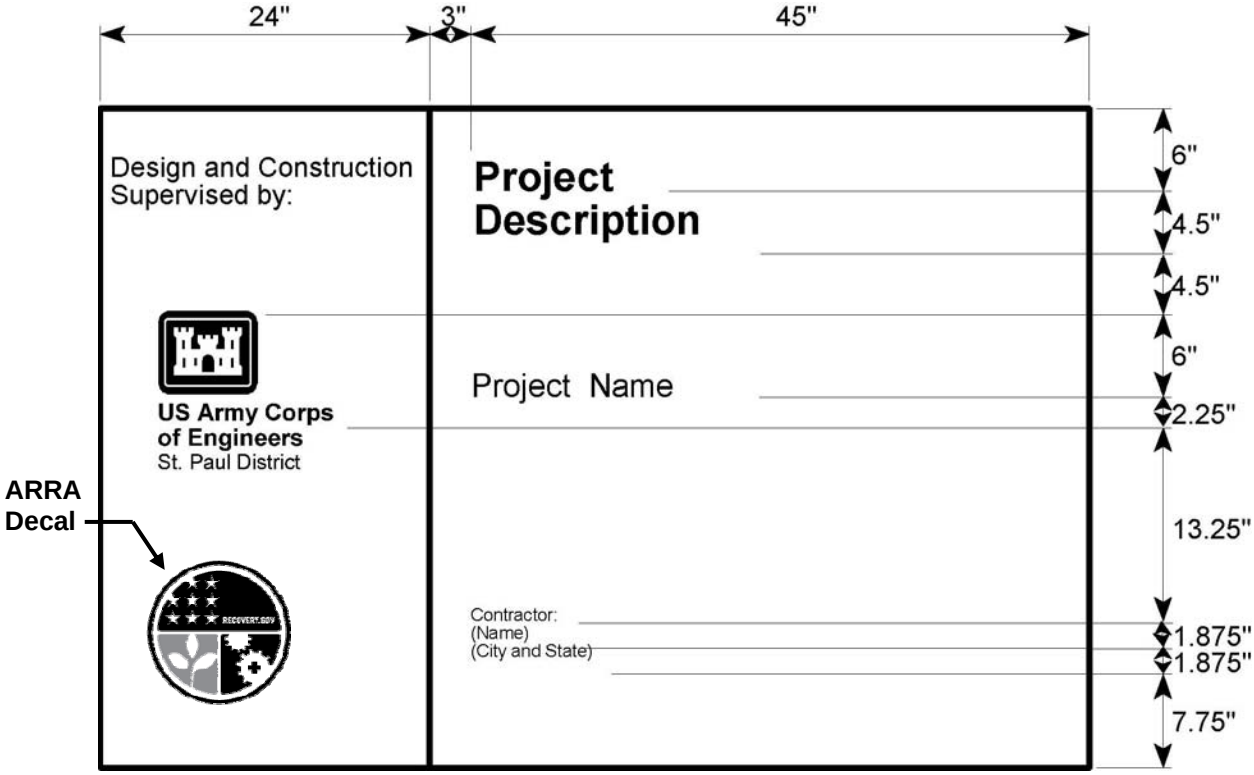

Primary Emblem

All projects which are funded by the ARRA should display signage that features the Primary Emblem throughout the construction phase. The signage should be displayed in a prominent location on site. Some exclusions may apply. The Primary Emblem can also be displayed on signs at events or conferences associated with the ARRA or the individual projects funded by the ARRA.

The Primary Emblem should not be displayed at a size less than 6 inches in diameter.

Color

All colors in the ARRA logos have precise color references, shown in the color specifications chart below. Always use the exact color values listed. Do not use screens or tints of any of the colors for any part of the logo. The CMYK values should be used for print applications. The RGB and HEX# values should be used for on-screen applications.

COLOR	CMYK	RGB	HEX#
Navy	00 / 00 / 00 / 00	0 / 51 / 102	003366
Red	30 / 100 / 100 / 50	102 / 0 / 0	660000
Green	65 / 25 / 100 / 7	103 / 144 / 62	67903E
Light Blue	67 / 37 / 6 / 00	89 / 141 / 192	598DC0

Clear Space

The clear space is shown as the value "X" in this exhibit. The minimum clear space must always be at least "X" on all sides of the logo. Whenever possible, increase the amount of clear space.

Monday, August 16, 2010
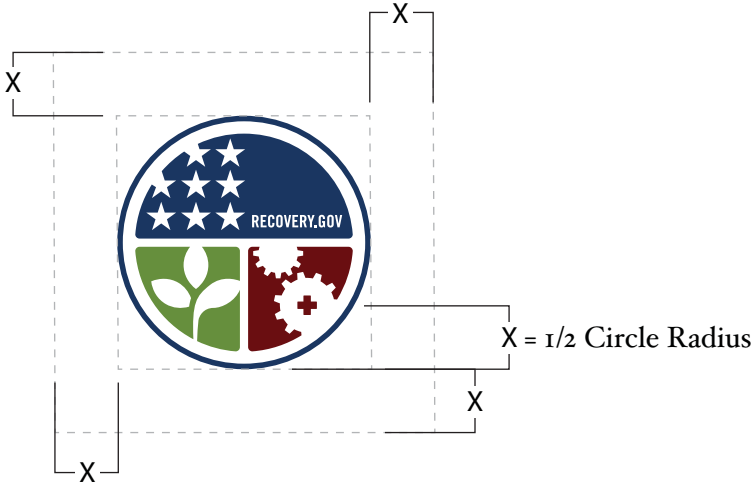
Primary Emblem